JOHNSON PUMP
AN SPX BRAND

Flexible Impeller Pumps for Marine Usage

OEM-Engine cooling
Deck wash & bilge
Multipurpose

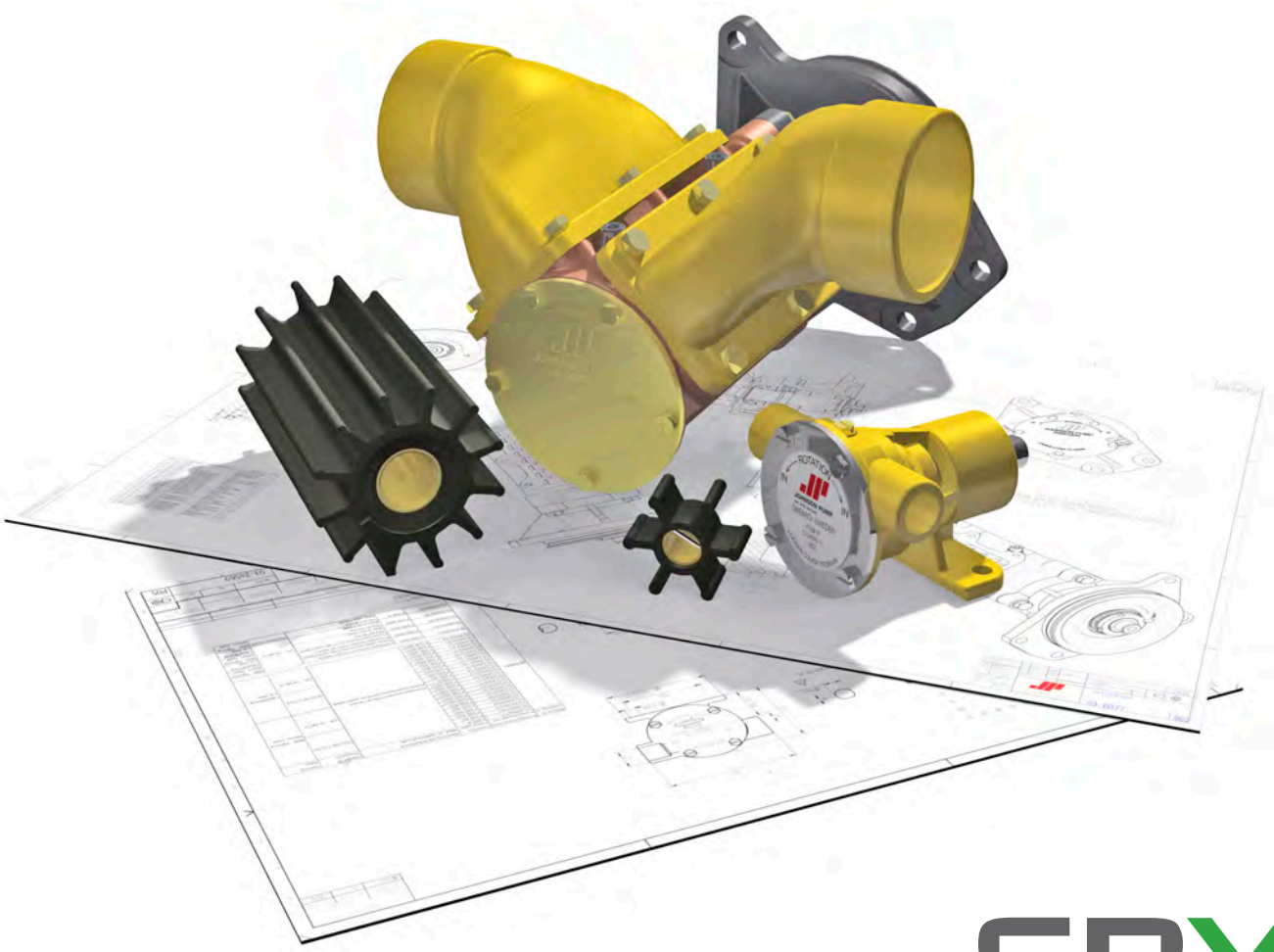

SPX®

SPX Johnson Pump Marine

SPX Johnson Pump is one of the world's leading manufacturers of pumps for marine use. For more than thirty years, the company has been providing the boaters of the world with high quality, highly reliable pumps. Our extensive product range includes water pressure systems, bilge pumps, deckwash pumps, engine cooling pumps and more.

Quality a Trademark

SPX Johnson Pump has built its international reputation on attention to quality in every detail of product development, production, and customer relations. You can count on us for constant improvement and further development in every aspect of our business dealings.

Working with the Best

Thanks to our extensive marine pump experience, we know the boating industry well. This makes it possible for us to find pumping solutions that meet the specific needs of each customer.
That's why so many leading manufacturers of marine engines and recreational craft trust SPX Johnson Pump to provide solutions for all their pumping needs.

Global, yet Local

No matter whether you are an experienced boater looking for a replacement pump or a manufacturer looking for any pumps for your marine application, we're prepared to provide you with the support you need. And no matter where you work or live, access to our products, services, spare parts and support are never far away. In fact, you'll find SPX Johnson Pump represented in every major industrial country of the world today and more than fifty nations altogether.

JOHNSON PUMP
AN SPX BRAND

JOHNSON PUMP
AN SPX BRAND

Copyright © SPX Corporation 2001, 2008.
The information, text, drawings and illustrations, in this book/CD, is the property of SPX Corporation and is protected by national and international copyright, trademarks and patents law and may not be modified in any way, reproduced (copied), publicly displayed, performed, distributed or otherwise used for any public or commercial purpose in any form or media (paper or electronic) without the written consent of SPX Corporation.

Flexible Impeller Pumps for Marine Usage

Flexible Impeller Pumps

Type specification system

Impeller overview

Crosslist old part numbers - new part numbers

Glossary

OEM-Engine cooling pumps — Chapter 1

- Flange-mounted
- High speed
- Dual

Deck wash & bilge pumps — Chapter 2

- Clutch pumps, -5000/5001 series

Multipurpose pumps — Chapter 3

- Sturdy, compact bronze, -8 series
- Extra heavy duty, -3000 series

Performance curves — Chapter 4

Spare parts — Chapter 5

- Impellers
- Cams
- Gaskets
- O-rings
- Endcovers
- Wear plates
- Service Kit and Part Reference Guide

Engine reference list — Chapter 6

Parts cross reference list — Chapter 7

Flexible Impeller Pumps

Flexible impeller pumps provide an efficient solution to most marine pumping needs. The primary advantage of a flexible impeller pump is its self-priming capability. As the vanes of the impeller are depressed and rebound, they create their own vacuum drawing fluid into the pump (see operating principle).

A dry pump can lift water up to as much as 5 metres. Thus a flexible impeller pump being used for bilges, deck washdown or engine cooling need not be located below the water line or manually primed. An added feature of flexible impeller pumps is that they can pass fairly large solids without clogging or damaging the pump. This reduces the need for filtering the incoming fluid.

For most Johnson Pump flexible impeller pumps, two different impeller materials are available. For general raw or fresh water applications, the standard long lasting neoprene rubber impeller is used. However, for pumping fuels or oily water (such as is often found in bilges), the oil resistant nitrile impeller will provide better service.

A common feature of all flexible impeller pumps is that they cannot be permitted to run dry for more than 30 seconds. Both the impeller and the seals depend upon the water for lubrication and will soon burn out if run dry.

Wearing parts are easily replaceable, and service kits are available for all standard models.

Operating principle

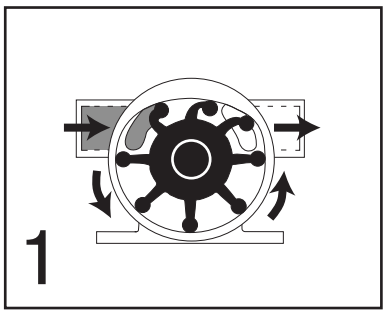

A vacuum is created as the flexible impeller vanes straighten upon leaving the cam, drawing liquid into the pump.

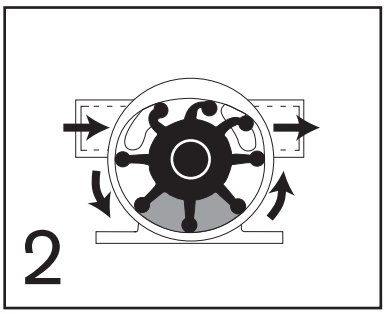

The rotating impeller carries liquid from the inlet to the outlet port.

As a consequence of their design, flexible impeller pumps can pass fairly large solids.

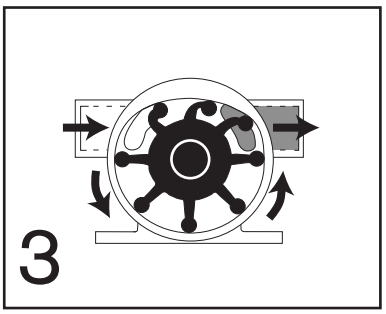

When the flexible impeller vanes regain contact with the cam, they bend and the liquid is discharged from the pump in a uniform flow.

Liquids can be pumped in the opposite direction by reversing the rotation of the pump.

Capacity range (based on water at 20°C/68°F)

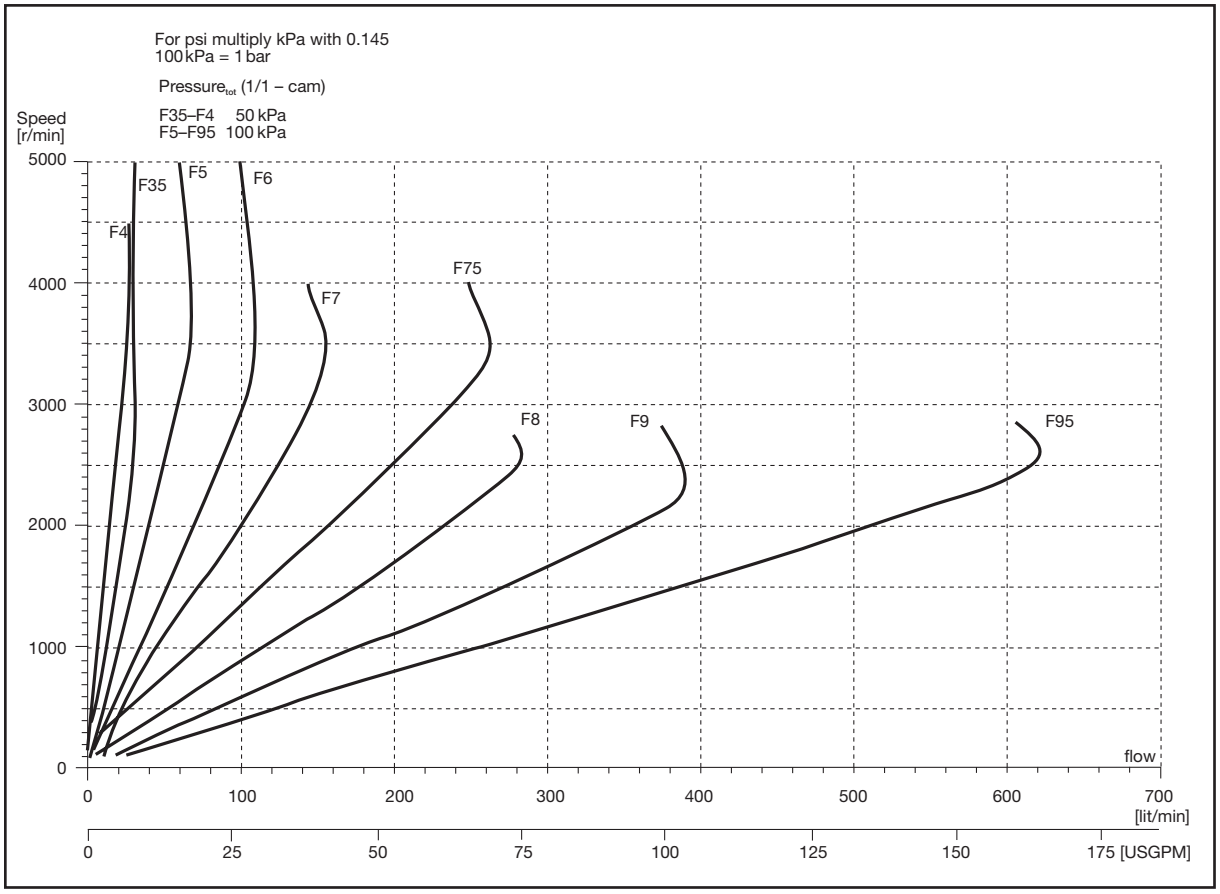

Key to SPX Johnson Pump type specification system

Pump types F2–F95 (excluding F70, F80 and F100)

Example: **F 7 B - 3 0 0 0**

Pump type
F = Flexible Impeller

Pump size
2
3/35
4
5
6
7
75
8
9
95

Generally increasing size

Body material
B = Bronze
P1 = Epoxy

Port connection
0 = BSP thread
7 = NPTF thread (on request)

Cam size
0 = 1/1 - Standard
2 = 1/2
3 = 2/3

Impeller material
0 = Neoprene
5 = Neoprene - Intermediate pressure
6 = Neoprene - High pressure
9 = Nitrile

Mounting
1 = Flange mounted to the motor
3 = Pedestal mounted with double ball bearings and mech. seal.
5 = Pedestal mounted with double ball bearings and mech. seal, magnetic clutch operated.
5001 = Compact unit with lip seal *)
8 = General purpose with double ball bearings and lip seal *)
9 = Custom, follows customer's specification

*) F8B-5001, F8B-8 also available with mech. seal

Impeller overview

Pump-size	Impeller part no.	Impeller material	Insert material	Min start torque (Nm)	Min reverse torque (Nm)	Liquid-temp. °C	Max head (bar)	Max flow (l/min)	Max speed (rpm)	Manometric suction-lift (m)
F2P10-19	08-1077B-9	Nitrile	Bronze	0.3	0.9	-15 to +85	0.9	16	4.000	1.5
TA3P10	08-1052S-9	Nitrile	Stainless	0.1	0.4	-15 to +85	2.0	27	3.800	0.5
F3B-19	08-843S-9	Nitrile	Stainless	0.1	0.4	-15 to +85	2.0	21	3.800	3.0
F35	08-806B-1	EPDM	Bronze	0.7	1.7	+3 to +80	1.5	33.5	4.500	2.5
	08-808B-1	EPDM	Bronze	0.7	1.7	+3 to +80	1.5	33.5	4.500	2.5
F4	08-810B-1	EPDM	Bronze	1.0	2.3	+3 to +80	2.0	81	4.500	2.5
	08-810B-9	Nitrile	Bronze	1.0	2.3	-15 to +85	1.5	34.5	2.800	2.5
	08-1026B-1	EPDM	Bronze	1.0	2.3	+3 to +80	1.5	81	4.500	2.5
	08-1026B-9	Nitrile	Bronze	1.0	2.3	-15 to +85	1.5	35.5	2.800	2.5
F4B-19	08-824P-1	EPDM	Plastic	0.3	0.9	-15 to +85	1.9	53.0	3.300	3.0
	08-824P-9	Nitrile	Plastic	0.3	0.9	-15 to +85	1.5	48.0	3.300	3.0
F5	08-801B	Neoprene	Bronze	2.2	5.2	+3 to +80	2.5	55	2.800	4.5
	08-1027B	Neoprene	Bronze	2.2	5.2	+3 to +80	2.5	75	4.500	4.5
	08-1027BT	Neoprene	Bronze, thread	2.2	5.2	+3 to +80	2.5	75	4.500	4.5
	08-1027B-1	EPDM	Bronze	2.2	5.2	+3 to +80	2.5	75	4.500	4.5
	*08-1027B-10	EPDM	Bronze	2.2	5.2	+3 to +80	2.5	75	4.500	4.5
	08-1027B-9	Nitrile	Bronze	2.2	5.2	-15 to +85	1.75	75	2.800	3.5
F6	08-812B	Neoprene	Bronze	2.8	7.1	+3 to +80	2.5	135	4.500	5.0
	8-812B-1	EPDM	Bronze	2.8	7.1	+3 to +80	2.5	135		
F7	08-1028B	Neoprene	Bronze	4.6	8.3	+3 to +80	2.5	158	3.000	5.0
	08-1028BT-1	EPDM	Bronze, thread	4.6	8.3	+3 to +80	2.5	158	3.000	5.0
	08-1028B-9	Nitrile	Bronze	4.6	8.3	-15 to +85	1.75	158	3.000	4.0
	08-1028S-9	Nitrile	Stainless	4.6	8.3	-15 to +85	1.75	158	3.000	4.0
	08-816B	Neoprene	Bronze	7.2	12	+3 to +80	4.0	105	2.000	5.0
	08-816S	Neoprene	Stainless	7.2	12	+3 to +80	4.0	83	1.500	5.0
F75	08-821B	Neoprene	Bronze	4.5	12	+3 to +80	2.5	270	3.500	5.0
	08-821BT	Neoprene	Bronze, thread	4.5	12	+3 to +80	2.5	270	3.500	5.0
	08-821BT-1	EPDM	Bronze, thread	4.5	12	+3 to +80	2.5	270	3.500	5.0
F8	08-1029B	Neoprene	Bronze	11	24	+3 to +80	2.5	295	2.200	5.0
	08-818B	Neoprene	Bronze	19	32	+3 to +80	4.0	295	2.500	5.0
	08-819B	Neoprene	Bronze	11	25	+3 to +80	2.5	295	2.800	5.0
	08-819B-9	Nitrile	Bronze	11	25	-15 to +85	1.75	295	2.500	4.0
F9	08-802B	Neoprene	Bronze	16	39	+3 to +80	2.5	440	2.200	5.0
	08-814B	Neoprene	Bronze	13	38	+3 to +80	3.5	350	2.000	5.0
F95	08-820B	Neoprene	Bronze, thread	18	56	+3 to +80	2.5	625	2.500	5.0
F98	08-842B	Neoprene	Bronze, thread	23	70	+3 to +80	2.5	840	2.500	5.0

Note! Max feeding pressure all pumps = 0.5 bar

Note! To obtain a long impeller life, operate between +4°C and +55°C and use Johnson Pump Impeller lubricant.

Note! If pump speed exceed specification above, contact Johnson Pump representative for advice.

* Impeller made with special dimensions.

Crosslist old part numbers - new part numbers

Old art.no.	Description	New art.no.
05-01-115	Washer	**0.0353.402**
05-01-12	Washer	**0.0350.115**
05-01-120	Washer	**01-46790-01**
05-01-122	Washer	**0.0350.118**
05-01-127	Washer	**0.0356.001**
05-01-128	Washer	**0.0350.155**
05-01-129	Washer	**0.0353.301**
05-01-130	Washer	**0.0350.617**
05-01-131	Washer	**0.0350.208**
05-01-133	Washer	**01-46789-01**
05-01-501	Washer	**01-46791-01**
05-01-502	Washer	**01-46790-02**
05-01-503	Washer	**0.0350.605**
05-01-509	Support ring	**0.0958.700**
05-01-512	Washer	**0.0350.116**
05-01-515	Washer	**0.0350.207**
05-01-517	Washer	**01-46789-02**
05-01-518	Washer	**01-46789-03**
05-01-519	Washer	**01-46789-04**
05-01-520	Washer	**0.0350.206**
05-01-521	Washer	**01-46789-05**
05-01-525	Washer	**0.0351.501**
05-01-529	Washer	**01-46789-06**
05-01-530	Washer	**01-46792-01**
05-01-532	Lock washer	**0.0351.602**
05-01-534	Washer	**0.0356.002**
05-02-101	Spring washer	**0.0353.309**
05-02-102	Lock washer	**Obsolete**
05-02-506	Washer	**0.0352.604**
05-02-508	Washer	**0.0352.104**
05-02-511	Washer	**0.0379.400**
05-02-512	Washer	**0.0353.109**
05-02-514	Washer	**0.0353.111**
05-02-518	Washer	**0.0353.311**
05-02-519	Spring washer	**0.0352.609**
05-02-520	Lock washer	**0.0383.026**
05-02-521	Lock washer	**0.0383.007**
05-02-523	Lock washer	**0.0357.001**
05-03-114	Pin	**0.0414.644**
05-03-119	Woodruff key	**0.0503.030**
05-03-121	Key	**0.0502.001**
05-03-122	Plug	**0.2500.805**
05-03-124	Key	**0.0502.231**
05-03-125	Key	**0.0502.038**
05-03-126	Plug	**0.0633.728**
05-03-127	Woodruff key	**0.0503.029**
05-03-501	Key	**0.0502.012**
05-03-502	Key	**0.0502.032**
05-03-504	Pin	**0.0414.666**
05-03-505	Woodruff key	**0.0503.027**
05-03-511	Plug	**0.0633.729**
05-03-512	Woodruff key	**0.0503.036**
05-03-513	Plug	**0.0633.736**
05-03-514	Woodruff key	**0.0503.032**
05-03-521	Key	**0.0502.003**
05-03-523	Key	**0.0503.038**
05-03-524	Pin	**0.0415.342**

Old art.no.	Description	New art.no.
05-03-527	Key	**0.0502.048**
05-03-528	Woodruff key	**0.0503.010**
05-03-531	Ball	**0.3433.001**
05-03-532	Key	**0.0502.025**
05-04-105	Screw	**0.0144.001**
05-04-107	Screw	**01-46794-01**
05-04-108	Screw	**01-46794-02**
05-04-114	Screw	**01-46794-03**
05-04-115	Screw	**01-46794-04**
05-04-117	Screw	**01-46794-05**
05-04-123	Screw	**01-46793-01**
05-04-124	Screw	**01-46793-02**
05-04-125	Screw	**01-46794-06**
05-04-128	Screw	**0.0144.002**
05-04-130	Screw	**0.0300.524**
05-04-131	Screw	**0.0300.544**
05-04-139	Screw	**0.0300.565**
05-04-144	Screw	**01-46794-07**
05-04-146	Screw	**0.0141.911**
05-04-147	Screw	**01-46794-08**
05-04-148	Screw	**0.0144.003**
05-04-150	Screw	**0.0141.918**
05-04-156	Screw	**0.0300.943**
05-04-158	Screw	**0.0141.903**
05-04-159	Screw	**0.0144.004**
05-04-162	Screw	**0.0279.500**
05-04-163	Screw	**0.0279.501**
05-04-167	Screw	**0.0257.036**
05-04-168	Screw	**0.0256.011**
05-04-169	Screw	**0.0138.239**
38459	Screw	**0.0300.523**
05-04-171	Screw	**0.0141.910**
05-04-172	Screw	**0.0141.916**
05-04-174	Screw	**0.0279.033**
05-04-175	Screw	**0.0279.032**
05-04-176	Screw	**0.0141.500**
05-04-177	Screw	**0.0281.001**
05-04-178	Screw	**0.0138.134**
05-04-183	Screw	**0.0141.906**
05-04-188	Screw	**0.0141.902**
05-04-46	Screw	**0.0144.200**
05-04-49	Screw	**0.0141.901**
05-04-507	Screw	**0.0142.730**
05-04-515	Screw	**01-46794-09**
05-04-526	Screw	**0.0142.601**
05-04-527	Screw	**0.0142.602**
05-04-530	Screw	**0.0142.617**
05-04-531	Screw	**0.0142.603**
05-04-550	Screw	**0.0141.502**
05-04-552	Screw	**0.0251.688**
05-04-553	Screw	**01-46794-10**
05-04-563	Screw	**0.0140.400**
05-04-564	Screw	**0.0140.401**
05-04-565	Screw	**0.0303.590**
05-04-566	Screw	**0.0278.602**
05-04-568	Screw	**0.0257.026**
05-04-569	Screw	**0.0319.500**

Crosslist old part numbers - new part numbers

Old art.no.	Description	New art.no.
05-04-570	Screw	**0.0278.037**
05-04-572	Screw	**0.0140.500**
05-04-573	Screw	**0.0279.301**
05-04-574	Screw	**0.0252.017**
05-04-575	Screw	**0.0142.731**
05-04-577	Screw	**0.0278.603**
05-04-580	Screw	**0.0256.001**
05-04-581	Screw	**0.0148.001**
05-04-583	Screw	**0.0138.183**
05-04-588	Screw	**0.0300.742**
05-04-595	Screw	**0.0141.922**
05-04-596	Screw	**0.0141.928**
05-04-601	Screw	**0.0150.001**
05-04-602	Screw	**0.0278.802**
05-04-603	Screw	**0.0142.732**
05-04-605	Screw	**0.0256.010**
05-04-608	Screw	**0.0300.764**
05-04-609	Screw	**0.0142.733**
05-04-610	Screw	**0.0142.734**
05-04-611	Screw	**0.0138.143**
05-04-614	Screw	**0.0142.735**
05-04-620	Screw	**0.0142.860**
05-04-621	Screw	**0.0141.917**
05-04-622	Screw stud	**0.0013.328**
05-04-623	Screw stud	**0.0013.329**
05-04-628	Screw	**0.0142.738**
05-04-629	Screw	**0.0251.704**
05-04-630	Screw	**0.0142.739**
05-04-631	Screw	**0.0144.005**
05-04-632	Screw	**0.0141.700**
05-04-633	Screw	**0.0138.050**
05-04-634	Screw	**0.0251.690**
05-04-635	Screw	**0.0251.714**
05-04-636	Screw	**01-46794-11**
05-04-638	Screw	**01-46794-12**
05-04-639	Screw	**0.0140.402**
05-04-640	Screw	**0.0138.921**
05-04-641	Screw	**01-46794-13**
05-04-642	Screw	**0.0279.300**
05-04-643	Screw	**0.0142.737**
05-04-644	Screw	**0.0145.001**
05-04-645	Screw	**0.0145.002**
05-04-646	Screw	**0.0141.164**
05-04-647	Screw	**0.0146.001**
05-04-648	Screw	**01-46794-14**
05-04-649	Screw	**0.0257.065**
05-04-650	Screw stud	**0.0012.924**
05-04-651	Screw	**0.0257.060**
05-04-652	Eye bolt	**0.0070.201**
05-04-653	Screw	**0.0141.930**
05-04-654	Screw	**0.0141.935**
05-04-655	Screw	**0.0257.024**
05-04-656	Screw	**0.0278.601**
05-04-657	Screw	**0.0140.201**
05-04-658	Screw	**0.0140.202**
05-04-659	Screw	**0.0279.302**
05-04-660	Screw	**0.0141.501**

Old art.no.	Description	New art.no.
05-04-661	Screw	**0.0256.012**
05-04-662	Screw	**0.0141.915**
05-04-84	Screw	**0.0140.001**
05-05-115	Nut	**0.0194.001**
05-05-116	Nut	**0.0185.159**
05-05-117	Nut	**0.0185.310**
05-05-119	Nut	**0.0185.309**
05-05-121	Nut	**0.0195.100**
05-05-122	Nut	**0.0185.311**
05-05-502	Nut	**0.0185.350**
05-05-506	Nut	**0.0185.069**
05-05-508	Nut	**0.0192.001**
05-05-510	Nut	**0.0191.001**
05-05-511	Nut	**0.0185.068**
05-05-512	Nut	**0.0185.070**
05-05-513	Nut	**0.0193.001**
05-05-514	Nut	**0.0188.001**
05-05-522	Nut	**0.0188.001**
05-05-523	Nut	**0.0187.100**
05-05-524	Nut	**0.0383.500**
05-05-525	Nut	**0.0243.007**
05-05-526	Nut	**0.0190.001**
05-05-527	Nut	**0.0190.050**
05-05-528	Nut	**0.0183.200**
05-05-529	Nut	**0.0185.071**
05-05-531	Nut	**0.0190.100**
05-06-030	O-ring	**0.2172.506**
05-06-342V	O-ring	**0.2172.410**
05-06-432V	O-ring	**0.2172.336**
05-06-500	O-ring	**0.2173.403**
05-06-501	O-ring	**0.2173.402**
05-06-502	O-ring	**0.2173.467**
05-06-503	O-ring	**0.2172.142**
05-06-504	O-ring	**0.2173.447**
05-06-504V	O-ring	**0.2173.809**
05-06-507	O-ring	**0.2173.470**
05-06-511	O-ring	**0.2173.454**
05-06-512	O-ring	**0.2173.459**
05-06-513	O-ring	**0.2173.432**
05-06-514	O-ring	**0.2173.451**
05-06-516	O-ring	**0.2173.457**
05-06-516V	O-ring	**0.2173.819**
05-06-518	O-ring	**0.2172.024**
05-06-518V	O-ring	**0.2172.023**
05-06-519	O-ring	**0.2173.466**
05-06-521	O-ring	**0.2173.468**
05-06-522	O-ring	**0.2173.469**
05-06-523	O-ring	**0.2173.473**
05-06-527V	O-ring	**0.2172.048**
05-06-528V	O-ring	**0.2172.049**
05-06-534	O-ring	**0.2173.474**
05-06-536V	O-ring	**0.2172.141**
05-06-537	O-ring	**0.2172.573**
05-06-537V	O-ring	**0.2172.017**
05-06-544V	O-ring	**0.2172.028**
05-06-545	O-ring	**0.2172.018**
05-06-557	O-ring	**0.2172.504**

Crosslist old part numbers - new part numbers

Old art.no.	Description	New art.no.
05-06-558V	O-ring	**0.2172.505**
05-06-559V	O-ring	**0.2173.439**
05-06-563V	O-ring	**0.2172.019**
05-06-568V	O-ring	**0.2172.585**
05-06-571V	O-ring	**0.2172.020**
05-06-572V	O-ring	**0.2172.021**
05-06-573V	O-ring	**0.2172.029**
05-06-574V	O-ring	**0.2172.022**
05-06-576	O-ring	**0.2173.434**
05-06-577	O-ring	**0.2173.435**
05-06-578	O-ring	**0.2173.009**
05-06-579	O-ring	**0.2173.492**
05-06-580	O-ring	**0.2173.443**
05-06-581	O-ring	**0.2173.472**
05-06-582	O-ring	**0.2172.995**
05-06-583	O-ring	**0.2173.452**
05-06-584	O-ring	**0.2173.471**
05-06-585E	O-ring	**0.2173.020**
05-06-588E	O-ring	**0.2173.005**
05-06-589	O-ring	**0.2173.493**
05-06-590	O-ring	**0.2173.475**
05-06-591	O-ring	**0.2173.436**
05-06-592V	O-ring	**0.2173.822**
05-06-593V	O-ring	**0.2173.826**
05-06-594V	O-ring	**0.2173.821**
05-06-595	O-ring	**0.2172.012**
05-06-597	O-ring	**0.2173.476**
05-06-598V	O-ring	**0.2173.160**
05-06-599V	O-ring	**0.2172.412**
05-06-600	O-ring	**0.2173.477**
05-06-601	O-ring	**0.2173.478**
05-06-601V	O-ring	**0.2173.478**
05-06-602	O-ring	**0.2173.446**
05-06-603	O-ring	**0.2173.445**
05-06-604	O-ring	**0.2173.479**
05-06-604V	O-ring	**0.2173.823**
05-06-605	O-ring	**0.2172.013**
05-06-606	O-ring	**0.2173.444**
05-06-607	O-ring	**0.2173.437**
05-06-608	O-ring	**0.2173.480**
05-06-609	O-ring	**0.2173.481**
05-06-610	O-ring	**0.2173.442**
05-06-611	O-ring	**0.2172.014**
05-06-612	O-ring	**0.2172.015**
05-06-613	O-ring	**0.2172.016**
05-06-614	O-ring	**0.2173.441**
05-06-615	O-ring	**0.2172.557**
05-06-616	O-ring	**0.2172.647**
05-06-617	O-ring	**0.2173.401**
05-06-618	O-ring	**0.2173.440**
05-07-101	Gasket	**01-46795-01**
05-08-113	Ball bearing	**0.3431.482**
05-08-117	Ball bearing	**0.3431.484**
05-08-118	Ball bearing	**0.3431.486**
05-08-122	Ball bearing	**0.3431.754**
05-08-123	Ball bearing	**0.3431.761**
05-08-124	Ball bearing	**0.3431.760**

Old art.no.	Description	New art.no.
05-08-125	Ball bearing	**0.3431.488**
05-08-126	Ball bearing	**0.3431.203**
05-08-128	Ball bearing	**0.3431.742**
05-08-129	Ball bearing	**0.3431.483**
05-08-130	Ball bearing	**0.3431.748**
38585	Ball bearing	**0.3431.523**
38586	Ball bearing	**0.3431.778**
38589	Ball bearing	**0.3431.485**
38590	Ball bearing	**0.3431.001**
05-08-500	Ball bearing	**0.3431.746**
05-08-501	Ball bearing	**0.3431.204**
05-08-502	Ball bearing	**0.3431.043**
05-08-503	Ball bearing	**0.3431.441**
05-08-504	Ball bearing	**0.3431.780**
05-08-505	Ball bearing	**0.3431.684**
05-08-506	Ball bearing	**0.3431.747**
05-08-507	Ball bearing	**0.3431.208**
05-08-508	Ball bearing	**0.3431.206**
05-08-509	Ball bearing	**0.3431.701**
05-08-510	Ball bearing	**0.3431.525**
05-08-511	Ball bearing	**0.3431.444**
05-08-512	Ball bearing	**0.3431.743**
05-08-513	Ball bearing	**0.3431.044**
05-08-514	Ball bearing	**0.3431.665**
05-08-516	Ball bearing	**0.3431.745**
05-08-517	Ball bearing	**0.3431.753**
05-08-518	Ball bearing	**0.3431.741**
05-08-519	Ball bearing	**0.3431.740**
05-09-100	Ball bearing	**0.3428.570**
05-09-500	Roller bearing	**0.3428.513**
05-09-501	Roller bearing	**0.3428.514**
05-09-502	Roller bearing	**0.3428.516**
05-09-503	Roller bearing	**0.3428.515**
05-12-104	Hose	**0.3449.003**
05-13-101	Port adaptor	**01-35160-1**
05-13-104	Tube coupling	**0.2504.052**
05-13-106	T-pip joint	**0.2491.401**
05-13-108	Nipple	**0.2530.004**
05-13-112	Nipple	**0.3445.003**
05-13-501	Nipple	**0.3445.002**
05-13-528	Nipple	**0.3445.001**
05-13-544	Hose socket	**0.2527.001**
05-13-550	Nipple	**0.2504.049**
05-13-552	Nipple	**0.2528.504**
05-13-565	Reduce bushing	**0.2504.051**
05-13-569	Angular	**0.2493.506**
05-13-576	Plug	**0.0633.727**
05-13-612	Nipple	**0.2505.006**
05-13-634	5-way coupling	**0.2530.001**
05-13-636	Hose socket	**0.2527.002**
05-13-637	Hose nipple	**0.2527.003**
05-13-638	Hose nipple	**0.2527.004**
05-13-639	Hose nipple	**0.2527.005**
05-13-640	Plug	**0.2500.801**
05-13-641	Nipple	**0.2500.802**
05-13-642	Nipple	**0.2500.803**
05-13-644	Plug	**0.2500.802**

Crosslist old part numbers - new part numbers

Old art.no.	Description	New art.no.
05-13-645	Quick coupling	0.2527.006
05-13-646	Nipple	0.3448.006
05-13-647	Nipple	0.3448.001
05-13-648	Nipple	0.3445.083
05-13-649	Nipple	0.2505.001
05-13-650	Nipple	0.2505.002
05-13-651	Nipple	0.2505.003
05-13-652	Nipple	0.2505.004
05-13-653	Nipple	0.2505.005
05-14-501	Spray pistol	0.2527.007
05-15-121	Motor	4.9309.001
05-15-141	Motor	4.9309.002
05-15-143	Motor	4.9309.003
05-15-506	Motor	4.9309.004
05-15-554	Motor	4.9309.005
05-15-564	Motor	4.9309.006
05-15-566	Motor	4.9309.007
05-15-567	Motor	4.9309.008
05-15-568	Motor	4.9309.009
05-15-603	Motor	4.9309.012
05-15-615	Motor	01-24537-01
05-15-616	Motor	01-24537-02
05-15-617	Motor	01-24537-03
05-15-648	Motor	4.9309.021
05-15-649	Motor	4.9309.010
05-15-650	Motor	4.9309.022
05-15-653	Motor	4.9309.011
05-15-708	Motor	4.9309.013
05-15-710	Motor	01-24537-04
05-15-711	Motor	4.9309.014
05-15-712	Motor	4.9309.015
05-16-501	Wire	0.3442.001
05-16-502	Wire	0.3442.002
05-16-503	Wire	0.3442.003
05-16-504	Wire	0.3442.004
05-16-505	Cable	0.3442.005
05-16-506	Cable	0.3442.006
05-16-507	Cable	0.3442.007
05-17-526	Cable	0.3452.001
05-17-527	Cable	0.3452.002
05-17-530	Tubular rivet	0.3452.450
05-17-531	Flat pin sleeve	0.3452.350
05-17-533	Fuse	0.3452.150
05-17-534	Fuse	0.3452.151
05-17-535	Fuse	0.3452.152
05-17-536	Protection sleeve	0.3452.003
05-17-537	Cable terminal	0.3452.410
05-17-538	Cable terminal	0.3452.411
05-17-541	Screwed hosejoint	0.3452.100
05-17-542	Hose	0.3452.101
05-17-545	Contact housing AMP 1-967402-1	0.3452.050
05-17-546	Wire shoe pin	0.3452.051
05-17-547	Lock key	0.3452.052
05-17-548	Bundle band	0.3452.600
05-17-549	Brush/Radio Dist. Set	0.3452.200
05-17-551	Capacitor	0.3452.420

Old art.no.	Description	New art.no.
05-17-552	Drossel	0.3452.550
05-17-553	Resistance	0.3452.421
05-17-554	Contact Molex	0.3452.250
05-17-555	Cable cap	0.3452.251
05-17-556	Sleeve Molex	0.3452.252
05-17-557	Marking Partex	0.3452.253
05-17-558	Contact housing	0.3452.007
05-17-559	Pin amp	0.3452.004
05-17-560	Pin seal	0.3452.005
05-17-561	Seal plug	0.3452.006
05-17-563	Cable terminal	0.3452.500
05-17-565	Clip	0.3452.103
05-17-566	Sleeve Molex	0.3452.301
05-17-567	Varistor	0.3452.430
05-17-568	Corrug Prot house	0.3452.104
05-17-569	Wire shoe pin	0.3452.053
05-17-570	Fuse	0.3452.400
05-17-572	Sleeve	0.3452.300
05-18-500	Micro switch	0.3455.050
05-18-502	Micro switch	0.3455.051
05-18-503	Micro switch	0.3455.001
05-18-505	Pressure switch	0.3455.100
05-18-506	Micro switch	0.3455.150
05-19-4	Lip seal	0.2233.402
05-19-503	V-ring	0.2230.015
05-19-505	V-ring	0.2230.319
05-19-506	V-ring	0.2230.322
05-19-507	Nilos Ring	0.2232.066
05-20-115	Mech.seal	0.2247.050
05-20-118	Mech.seal	0.2247.051
05-20-121	Mech.seal	0.2247.001
05-20-121V	Mech.seal	0.2247.002
05-20-122	Mech.seal	0.2247.003
05-20-501	Mech.seal	0.2247.004
05-20-501V	Mech.seal	0.2247.005
05-20-502	Mech.seal	0.2247.006
05-20-502V	Mech.seal	0.2247.007
05-20-503	Mech.seal	0.2247.080
05-20-505	Mech.seal	0.2247.008
05-20-505V	Mech.seal	0.2247.009
05-20-509	Mech.seal	0.2247.010
05-20-509V	Mech.seal	0.2247.011
05-20-523	Mech.seal	0.2247.012
05-20-524	Mech.seal	0.2247.013
05-20-525	Mech.seal	0.2247.014
05-20-537	Mech.seal	0.2247.016
05-20-538	Mech.seal	0.2247.017
05-20-539	Mech.seal	0.2247.018
05-20-540	Mech.seal	0.2247.019
05-20-541	Mech.seal	0.2247.020
05-20-542	Mech.seal	0.2247.021
05-20-543	Mech.seal	0.2247.022
05-22-501	Spring	01-46796-01
05-22-502	Spring	01-46796-02
05-22-503	Spring	01-46796-03
05-22-505	Spring	01-46796-04
05-22-506	Spring	01-46796-05

Crosslist old part numbers - new part numbers

Old art.no.	Description	New art.no.
05-23-501	Cable seal	**0.3452.651**
05-23-502	Cable seal	**0.3452.652**
05-23-503	Cable seal	**0.3452.650**
05-24-506	Lever	**0.3447.001**
05-26-102	Back valve	**0.2311.001**
05-26-521	Back valve	**0.2311.002**
05-26-523	Back valve	**0.2311.003**
05-29-105	Lip seal	**0.2233.001**
05-29-108	Lip seal	**0.2233.002**
05-29-108V	Lip seal	**0.2234.001**
05-29-11	Lip seal	**0.2233.401**
05-29-115	Lip seal	**0.2233.003**
05-29-117	Lip seal	**0.2233.004**
05-29-118	Lip seal	**0.2234.337**
05-29-120	Lip seal	**0.2233.005**
05-29-122	Lip seal	**0.2233.350**
05-29-125	Lip seal	**0.2233.006**
05-29-135	Lip seal	**0.2233.007**
05-29-137	Lip seal	**0.2233.008**
05-29-138	Lip seal	**0.2233.009**
05-29-139	Lip seal	**0.2233.010**
05-29-140	Lip seal	**0.2234.002**
05-29-141	Lip seal	**0.2234.003**
05-29-142	Lip seal	**0.2233.011**
05-29-143	Lip seal	**0.2233.012**
05-29-21	Lip seal	**0.2233.482**
05-29-501	Lip seal	**0.2233.013**
05-29-502	Lip seal	**0.2233.200**
05-29-503	Lip seal	**0.2234.004**
05-29-504	Lip seal	**0.2233.014**
05-29-506	Lip seal	**0.2234.005**
05-29-508	Lip seal	**0.2233.015**
05-29-510	Lip seal	**0.2233.250**
05-29-511	Lip seal	**0.2233.300**
05-29-512	Lip seal	**0.2234.006**
05-29-513	Lip seal	**0.2233.251**
05-29-515	Lip seal	**0.2233.252**
05-29-516	Lip seal	**0.2233.301**
05-29-517	Lip seal	**0.2233.016**
05-29-519	Lip seal	**0.2233.017**
05-29-520	Lip seal	**0.2233.018**
05-29-521	Lip seal	**0.2233.019**
05-29-523	Lip seal	**0.2233.020**
05-29-524V	Lip seal	**0.2234.007**
05-29-525	Lip seal	**0.2233.023**
05-29-526	Lip seal	**0.2233.351**
05-29-527	Lip seal	**0.2233.021**
05-29-529	Lip seal	**0.2234.502**
05-29-530	Lip seal	**0.2233.022**
05-29-531V	Lip seal	**0.2234.008**
05-29-533	Lip seal	**0.2234.009**
05-29-534	Lip seal	**0.2234.010**
05-29-535	Lip seal	**0.2234.011**
05-29-536	Lip seal	**0.2234.012**
05-29-537	Lip seal	**0.2233.201**
05-29-8	Lip seal	**0.2233.400**
05-30-519	Hose clamp	**0.2819.103**

Old art.no.	Description	New art.no.
05-30-520	Hose clamp	**0.2819.104**
05-32-1	El.magn.clutch	**0.3454.001**
05-32-105	Coupling half	**0.3446.001**
05-32-106	Coupling half	**0.3446.002**
05-32-118	Coupling joint	**0.3446.003**
05-32-120	Coupling joint	**0.3446.004**
05-32-2	El.magn.clutch	**0.3454.002**
05-32-3	El.magn.clutch	**0.3454.003**
05-32-4	El.magn.clutch	**0.3454.004**
05-32-7	Coil	**0.3454.050**
05-32-8	Coil	**0.3454.051**
05-34-1	Circlip	**0.0370.015**
05-34-105	Circlip	**0.0370.516**
05-34-107	Circlip	**0.0370.020**
05-34-108	Circlip	**0.0370.525**
05-34-117	Circlip	**0.0371.047**
05-34-118	Circlip	**0.0371.062**
05-34-128	Circlip	**0.0370.040**
05-34-129	Circlip	**0.0371.080**
05-34-130	Circlip	**0.0371.040**
05-34-131	Circlip	**0.0371.028**
05-34-2	Circlip	**0.0371.035**
05-34-21	Circlip	**0.0370.017**
05-34-22	Circlip	**0.0370.517**
05-34-25	Circlip	**0.0371.052**
05-34-501	Circlip	**0.0370.012**
05-34-502	Circlip	**0.0371.072**
05-34-503	Circlip	**0.0371.600**
05-34-504	Circlip	**0.0371.624**
05-34-505	Circlip	**0.0370.030**
05-34-507	Circlip	**0.0371.042**
05-34-508	Circlip	**0.0370.535**
05-34-509	Circlip	**0.0369.001**
05-34-511	Circlip	**0.0371.732**
05-34-512	Circlip	**0.0370.025**
05-34-513	Circlip	**0.0371.090**
05-34-514	Circlip	**0.0371.068**
05-34-515	Circlip	**0.0370.035**
05-34-9	Circlip	**0.0357.002**
05-35-7	Vac on switch	**0.3455.105**
05-39-01	Plug	**0.0633.701**
05-39-02	Plug	**0.0633.702**
05-39-03	Plug	**0.0633.703**
05-39-04	Plug	**0.0633.704**
05-39-05	Plug	**0.0633.705**
05-39-06	Plug	**0.0633.706**
05-39-07	Plug	**Obsolete**
05-39-08	Plug	**0.0633.708**
05-39-09	Plug	**0.0633.709**
05-39-10	Plug	**0.0633.710**
05-39-11	Plug	**0.0633.711**
05-39-12	Plug	**0.0633.712**
05-39-13	Plug	**0.0633.713**
05-39-14	Plug	**0.0633.714**
05-39-15	Plug	**0.0633.715**
05-39-16	Plug	**0.0633.716**
05-39-17	Plug	**0.0633.717**

Crosslist old part numbers - new part numbers

Old art.no.	Description	New art.no.
05-39-18	Plug	**0.0633.718**
05-39-19	Plug	**0.0633.719**
05-39-20	Plug	**0.0633.720**
05-39-21	Plug	**0.0633.721**
05-39-22	Plug	**0.0633.722**
05-39-23	Plug	**0.0633.723**
05-39-24	Plug	**0.0633.724**
05-39-26	Plug	**0.0633.725**
05-39-28	Plug	**0.0633.726**
05-40-06	Carton	**0.3444.039**
05-40-07	Carton	**0.3444.040**
05-40-10	Carton	**0.3444.041**
05-40-11	Carton	**0.3444.042**
05-40-12	Carton	**0.3444.043**
05-40-13	Carton	**0.3444.044**
05-40-14	Carton	**0.3444.045**
05-40-15	Carton	**0.3444.046**
05-40-16	Carton	**0.3444.047**
05-40-501	Carton	**0.3444.001**
05-40-502	Carton	**0.3444.002**
05-40-503	Carton	**0.3444.003**
05-40-504	Carton	**0.3444.004**
05-40-505	Carton	**0.3444.005**
05-40-506	Carton	**0.3444.006**
05-40-510	Carton	**0.3444.007**
05-40-511	Carton	**0.3444.008**
05-40-512	Carton	**0.3444.009**
05-40-520	Plastic bag	**0.3444.010**
05-40-521	Carton	**0.3444.011**
05-40-522	Carton	**0.3444.012**
05-40-523	Carton	**0.3444.013**
05-40-524	Carton	**0.3444.014**
05-40-525	Carton	**0.3444.015**
05-40-526	Carton	**0.3444.016**
05-40-527	Carton	**0.3444.017**
05-40-528	Carton	**0.3444.018**
05-40-529	Carton	**0.3444.019**
05-40-530	Carton	**0.3444.020**
05-40-531	Plastic bag	**0.3444.021**
05-40-532	Plastic bag	**0.3444.022**
05-40-533	Carton	**0.3444.023**
05-40-534	Carton	**0.3444.024**
05-40-535	Carton	**0.3444.025**
05-40-536	Plastic bag	**0.3444.026**
05-40-537	Carton	**0.3444.027**
05-40-538	Carton	**0.3444.028**
05-40-539	Plastic bag	**0.3444.029**
05-40-540	Plastic bag	**0.3444.030**
05-40-541	Plastic bag	**0.3444.031**
05-40-542	Carton	**0.3444.032**
05-40-543	Carton	**0.3444.033**
05-40-544	Carton	**0.3444.034**
05-40-545	Plastic bag	**0.3444.035**
05-40-546	Plastic bag	**0.3444.036**
05-40-547	Plastic bag	**0.3444.037**
05-40-548	Carton	**0.3444.038**
05-40-549	Carton	**0.3444.048**

Old art.no.	Description	New art.no.
05-40-550	Carton	**0.3444.049**
05-53-500	Manometer	**0.2671.725**
09-20-115	Mech.seal cpl	**09-0.2247.050**
09-20-118	Mech.seal cpl	**09-0.2247.051**
09-20-121	Mech.seal cpl	**09-0.2247.001**
09-20-121V	Mech.seal cpl	**09-0.2247.002**
09-20-122	Mech.seal cpl	**09-0.2247.003**
09-20-501	Mech.seal cpl	**09-0.2247.004**
09-20-501V	Mech.seal cpl	**09-0.2247.005**
09-20-502	Mech.seal cpl	**09-0.2247.006**
09-20-503	Mech.seal cpl	**09-0.2247.080**
09-20-505	Mech.seal cpl	**09-0.2247.008**
09-20-509	Mech.seal cpl	**09-0.2247.010**
09-20-509V	Mech.seal cpl	**09-0.2247.011**
09-20-539	Mech.seal cpl	**09-0.2247.018**

Glossary

Swedish	English
Artikelnummer ogiltiga	Article numbers obsolete
Axel	Shaft
Bult	Bolt
Bussning	Bushing
Distanshylsa	Spacer
Distansring	Spacer
Elektrofriktionskoppling	Electromagnetic clutch
Excenterkoppling	Eccentric coupling
Fläns	Flange
Gummibricka	Rubber washer
Impeller	Impeller
Kam	Cam
Kastarring	Slinger
Kil	Key
Koppling	Coupling
Kugghjul	Gear
Kullager	Ball bearing
Lagerfot	Pedestal

Swedish	English
Lagerhus	Bearing house
Lock	Endcover
Låsbricka	Lockwasher
Låsring	Retaining ring
Läpptätning	Lip seal
Medbringare	Coupling, Carrier
Mekanisk tätning	Mechanical seal
Mutter	Nut
Packning	Gasket
Pumphus	Pump body
Remskiva	Pulley
Skruv	Screw
Slangbussning	Tube bushing
Slitbricka	Wearplate
Stift	Pin
Woodruffkil	Woodruff key

OEM-Engine cooling pumps

Flange-
mounted

High
Speed

Dual

Engine cooling

SPX Johnson Pump engine cooling pumps, the F-series (flexible impeller pumps) are available in several different styles and sizes to satisfy different cooling system needs. Flanged pumps which mount directly to the engine and crank shaft pulley mounted pumps are available for a wide variety of engines. SPX Johnson Pump is the original equipment pump supplier to the largest manufacturers world-wide of inboard engines. Pump ports are available in sizes from $^{3}/_{8}$" to $2^{1}/_{2}$".

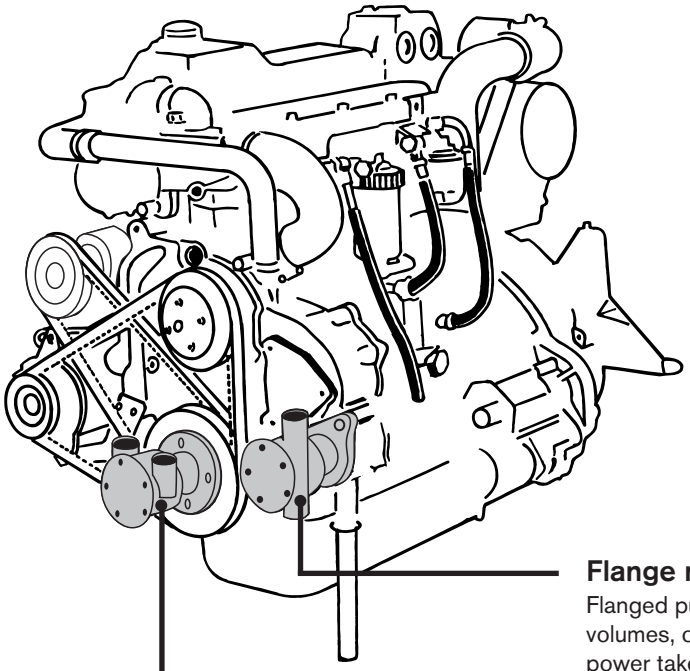

Flange mounted pumps

Flanged pumps are normal pumps produced in high volumes, customer designed for flange-mounting at a power take off of the engine. Different types of drives can be used but mainly gears or any type of driving members are used.

High speed pumps

These pumps are designed for direct installation on the engine crank shaft pulley. For some engines an adaptor kit for the engine crank shaft pulley is available.

To prevent the pump from rotating, a torque bracket from the fastening point on the pump body to a suitable point on the engine has to be used.

Dual purpose pumps

The most common applications for dual purpose pumps involve the addition of a second cooling pump or a bilge pump on to an existing pump.

OEM-Engine cooling pumps

Please note that not all pumps listed here are currently in production. Refer to price list for actual production.
Also note that some pumps are available only from engine manufacturers. Refer to the engine reference list in this volume.

Index sorted on pump article no.

Art. No.	Pump	Model	Page
10-11236	F7B-9	Flange mounted	158
10-13064	F7B/F9B	Dual	349
10-13080	F9B-9	Flange mounted	262
10-13088	F8B-9	Flange mounted	244
10-13095	F9B-9	Flange mounted	265
10-13096	F8B-9	Flange mounted	245
10-13141	F75B-9	Flange mounted	231
10-13142	F75B-9/F7B-9	Dual	351
10-13153	F75B-9	Flange mounted	233
10-13159	F5B-905	Flange mounted	97
10-13165	F95B-9	Flange mounted	281
10-13166	F9B-905	Flange mounted	267
10-13170	F75B-9	Flange mounted	235
10-13171	F9B-905	Flange mounted	269
10-13180	F8B-9	Flange mounted	247
10-13208	F6B-9	Flange mounted	139
10-13223	F5B-9	High speed	287
10-13234	F8B-9	Flange mounted	249
10-13236	F5B-9	High speed	289
10-13248	F95B-9	Flange mounted	283
10-13263	F8B-9	Flange mounted	251
10-13265	F75B-9	Flange mounted	237
10-13283	F5B-9	Flange mounted	98
10-13286	F75B-9	Flange mounted	239
10-13305	F8B-9	Flange mounted	253
10-13306	F75B-9	Flange mounted	241
10-13328	F5B-9	Flange mounted	99
10-13333	F6B-9	Flange mounted	140
10-13337	F4B-903	Flange mounted	40
10-13344	F5B-9	Flange mounted	100
10-13345	F6B-9	Flange mounted	141
10-13353	F5B-9	High speed	291
10-13354	F5B-9	High speed	293
10-13356	F6B-9	High speed	311
10-13357	F6B-9	High speed	313
10-13374	F7B-9	Flange mounted	161
10-13376	F6B-9	Flange mounted	142
10-13392	F5B-9	Flange mounted	103
10-13449	F6B-9	High speed	315
10-13468	F5B-9	High speed	295
10-13469	F5B-9	High speed	297
10-13470	F6B-9	High speed	317
10-21876	F7B-9	Flange mounted	162
10-21915	F8B-903	Flange mounted	254
10-22096	F8B-9	Flange mounted	255
10-22143	F5B-9	Flange mounted	104
10-22144	F7B-9	Flange mounted	163
10-22147	F7B-903	Flange mounted	164
10-22335	F7B-9	Flange mounted	165
10-22354	F7B-9	Flange mounted	166
10-22355	F5B-9	Flange mounted	105
10-24006	F9B-9	Flange mounted	270
10-24014	F7B-9	Flange mounted	167
10-24015	F5B-9	Flange mounted	106
10-24017	F7B-9	Flange mounted	168
10-24020	F7B-9	Flange mounted	169
10-24026	F8B-903	Flange mounted	256
10-24028	F7B-903	Flange mounted	170
10-24035	F5B-9	Flange mounted	107
10-24047	F5B/F4B-9	Dual	348
10-24053	F5B-9	Flange mounted	108
10-24057	F7B-903	Flange mounted	171
10-24061	F7B-9	Flange mounted	172
10-24072	F9B-9	Flange mounted	271
10-24076	F5B-9	High speed	298
10-24085	F5B-9	Flange mounted	109
10-24086	F5B-9	Flange mounted	110
10-24090	F9B-9	Flange mounted	272
10-24091	F8B-9	Flange mounted	257
10-24095	F4B/F4B-8	Dual	338
10-24096	F8B-9	Flange mounted	258
10-24097	F4B/F4B-9	Dual	339
10-24100	F5B-9	Flange mounted	111
10-24103	F7B-9	Flange mounted	173
10-24119	F5B-9	Flange mounted	112
10-24124	F4B/F4B-9	Dual	340
10-24126	F7B-903	Flange mounted	174
10-24127	F7B-9	Flange mounted	177
10-24130	F8B-9	Flange mounted	259
10-24131	F5B-9	Flange mounted	113
10-24139	F7B-9	Flange mounted	178
10-24140	F5B-9	Flange mounted	114
10-24143	F35B-9	Dual	328
10-24144	F4B-9	Dual	341
10-24159	F9B-9	Flange mounted	273
10-24164	F4B-9	Dual	342
10-24165	F4B-9	Dual	343
10-24166	F4B-9	Dual	344
10-24167	F4B-9	Dual	345
10-24174	F5B-9	Flange mounted	115
10-24178	F35B-9	Flange mounted	23
10-24179	F7B-9	Flange mounted	179
10-24181	F8B-9	Flange mounted	260
10-24183	F7B-9	Flange mounted	180
10-24184	F5B-9	Flange mounted	116
10-24214	F4B-9	High speed	284
10-24215	F5B-9	Flange mounted	117
10-24218	F7B-903	Flange mounted	181
10-24225	F5B-9	High speed	301
10-24228	F5B-9	High speed	303
10-24230	F5B-9	High speed	305
10-24232	F6B-9	High speed	319
10-24234	F6B-9	Flange mounted	143
10-24235	F7B-9	Flange mounted	182

Art. No.	Pump	Model	Page
10-24239	F9B-9	Flange mounted	274
10-24244	F7B-9	Flange mounted	183
10-24253	F7B-9	Flange mounted	185
10-24268	F5B-9	Flange mounted	118
10-24277	F7B-9	Flange mounted	186
10-24280	F7B-9	Flange mounted	187
10-24290	F4B-9	High speed	285
10-24302	F6B-9	High speed	321
10-24305	F7B-903	Flange mounted	188
10-24308	F9B-9	Flange mounted	277
10-24315	F8B-9	Flange mounted	261
10-24316	F6B-9	High speed	323
10-24318	F5B-905	Flange mounted	119
10-24319	F4B-9	Flange mounted	41
10-24321	F4B-9	Flange mounted	42
10-24325	F5B-9	Flange mounted	120
10-24326	F4B-9	Flange mounted	43
10-24329	F7B-9	Flange mounted	189
10-24334	F5B-9	Flange mounted	121
10-24335	F4B-9	Flange mounted	44
10-24336	F4B-9	Flange mounted	45
10-24338	F7B-9	High speed	324
10-24341	F4B-9	Flange mounted	46
10-24349	F7B-9	Flange mounted	191
10-24365	F7B-9	Flange mounted	193
10-24372	F5B-9	Flange mounted	123
10-24372	F5B-9	High speed	306
10-24386	F7B-9	Flange mounted	195
10-24390	F7B-9	Flange mounted	197
10-24394	F7B-9	Flange mounted	199
10-24398	F7B-9	Flange mounted	201
10-24412	F6B-9	Flange mounted	145
10-24413	F75B-9	Flange mounted	243
10-24428	F7B-9	High speed	327
10-24430	F9B-9	Flange mounted	279
10-24431	F7B-9	Flange mounted	203
10-24445	F7B-9	Flange mounted	205
10-24451	F5B-9	Flange mounted	125
10-24461	F5B-9	High speed	309
10-24463	F4B-9	Flange mounted	49
10-24465	F4B-9	Flange mounted	51
10-24475	F7B-02/903	Flange mounted	207
10-24493	F6B-9	Flange mounted	147
10-24508	F5B-9	Flange mounted	127
10-24509	F4B-9	Flange mounted	53
10-24514	F4B-9	Flange mounted	55
10-24515	F6B-9	Flange mounted	149
10-24524	F7B-9	Flange mounted	209
10-24535	F7B-903	Flange mounted	211
10-24542	F7B-903	Flange mounted	213
10-24562	F6B-9	Flange mounted	151
10-24563	F6B-9	Flange mounted	153
10-24567	F7B-9	Flange mounted	215
10-24580	F7B-9	Flange mounted	217
10-24593	F6B-9	Flange mounted	155
10-24629	F4B-9	Flange mounted	57
10-24630	F7B-9	Flange mounted	219
10-24633	F6B-9	Flange mounted	157
10-24637	F7B-9	Flange mounted	221
10-24638	F35B	Dual	331
10-24654	F7B-9	Flange mounted	223

Art. No.	Pump	Model	Page
10-24666	F7B-9	Flange mounted	225
10-24667	F7B-9	Flange mounted	227
10-24707	F35B-9	Flange mounted	24
10-24734	F4B-9	Flange mounted	59
10-24749	F4B-9	Flange mounted	61
10-24751	F4B-9	Flange mounted	63
10-24752	F4B-9	Flange mounted	65
10-24753	F7B-9	Flange mounted	229
10-31917	F4B-9	Flange mounted	66
10-31934	F35B-9	Flange mounted	25
10-32058	F5B-9	Flange mounted	128
10-32256	F5B-9	Flange mounted	129
10-32280	F35B-9	Flange mounted	26
10-32388	F35B-9	Flange mounted	27
10-32412	F35B-9	Flange mounted	28
10-32415	F35B-9	Flange mounted	29
10-32588	F4B-9	Flange mounted	67
10-32603	F5B-9	Flange mounted	130
10-32621	F5B-9	Flange mounted	131
10-35015	F35B-9	Flange mounted	30
10-35024	F4B-9	Flange mounted	68
10-35052	F35B-9	Flange mounted	31
10-35058	F4B-9	Flange mounted	69
10-35064	F4B-9	Flange mounted	70
10-35065	F35B/F35B-9	Dual	332
10-35066	F35B/F35B-9	Dual	333
10-35067	F5B-9	Flange mounted	132
10-35087	F4B-9	Flange mounted	71
10-35088	F35B-9	Flange mounted	32
10-35091	F35B-9	Flange mounted	33
10-35094	F4B-9	Flange mounted	72
10-35098	F4B-9	Flange mounted	75
10-35100	F5B-9	Flange mounted	133
10-35115	F4B-9	Flange mounted	76
10-35118	F35B-9	Flange mounted	34
10-35122	F35B-9	Flange mounted	35
10-35127	F4B-9	Flange mounted	79
10-35141	F35B-9	Dual	334
10-35142	F4B-9	Dual	346
10-35157	F35B-9	Flange mounted	36
10-35161	F4B-9	Flange mounted	80
10-35167	F4B-9	Flange mounted	81
10-35180	F5B-8021	Flange mounted	134
10-35187	F35B-9	Flange mounted	37
10-35205	F4B-9	Dual	347
10-35211	F35B-9	Flange mounted	38
10-35216	F4B-9	Flange mounted	83
10-35231	F5B-9	Flange mounted	135
10-35240	F4B-9	Flange mounted	84
10-35241	F4B-9	Flange mounted	85
10-35271	F4B-9	Flange mounted	87
10-35288	F35B-9	Flange mounted	39
10-35327	F5B-9	Flange mounted	136
10-35333	F4B-9	Flange mounted	89
10-35355	F4B-9	Flange mounted	91
10-35725	F4B-9	Flange mounted	93
10-35731	F35B/F35B-9	Dual	337
10-36006	F4B-9	Flange mounted	95
10-42864	F5B-9	Flange mounted	137

Index sorted on pump type

Flange mounted

Pump	Art. No.	Page
F35B-9	10-24178	23
F35B-9	10-24707	24
F35B-9	10-31934	25
F35B-9	10-32280	26
F35B-9	10-32388	27
F35B-9	10-32412	28
F35B-9	10-32415	29
F35B-9	10-35015	30
F35B-9	10-35052	31
F35B-9	10-35088	32
F35B-9	10-35091	33
F35B-9	10-35118	34
F35B-9	10-35122	35
F35B-9	10-35157	36
F35B-9	10-35187	37
F35B-9	10-35211	38
F35B-9	10-35288	39

Pump	Art. No.	Page
F4B-903	10-13337	40
F4B-9	10-24319	41
F4B-9	10-24321	42
F4B-9	10-24326	43
F4B-9	10-24335	44
F4B-9	10-24336	45
F4B-9	10-24341	46
F4B-9	10-24463	49
F4B-9	10-24465	51
F4B-9	10-24509	53
F4B-9	10-24514	55
F4B-9	10-24629	57
F4B-9	10-24734	59
F4B-9	10-24749	61
F4B-9	10-24751	63
F4B-9	10-24752	65
F4B-9	10-31917	66
F4B-9	10-32588	67
F4B-9	10-35024	68
F4B-9	10-35058	69
F4B-9	10-35064	70
F4B-9	10-35087	71
F4B-9	10-35094	72
F4B-9	10-35098	75
F4B-9	10-35115	76
F4B-9	10-35127	79
F4B-9	10-35161	80
F4B-9	10-35167	81
F4B-9	10-35216	83
F4B-9	10-35240	84
F4B-9	10-35241	85
F4B-9	10-35271	87
F4B-9	10-35333	89
F4B-9	10-35355	91
F4B-9	10-35725	93
F4B-9	10-36006	95

Pump	Art. No.	Page
F5B-905	10-13159	97
F5B-9	10-13283	98
F5B-9	10-13328	99
F5B-9	10-13344	100
F5B-9	10-13392	103
F5B-9	10-22143	104
F5B-9	10-22355	105
F5B-9	10-24015	106
F5B-9	10-24035	107
F5B-9	10-24053	108
F5B-9	10-24085	109
F5B-9	10-24086	110
F5B-9	10-24100	111
F5B-9	10-24119	112
F5B-9	10-24131	113
F5B-9	10-24140	114
F5B-9	10-24174	115
F5B-9	10-24184	116
F5B-9	10-24215	117
F5B-9	10-24268	118
F5B-905	10-24318	119
F5B-9	10-24325	120
F5B-9	10-24334	121
F5B-9	10-24372	123
F5B-9	10-24451	125
F5B-9	10-24508	127
F5B-9	10-32058	128
F5B-9	10-32256	129
F5B-9	10-32603	130
F5B-9	10-32621	131
F5B-9	10-35067	132
F5B-9	10-35100	133
F5B-8021	10-35180	134
F5B-9	10-35231	135
F5B-9	10-35327	136
F5B-9	10-42864	137

Pump	Art. No.	Page
F6B-9	10-13208	139
F6B-9	10-13333	140
F6B-9	10-13345	141
F6B-9	10-13376	142
F6B-9	10-24234	143
F6B-9	10-24412	145
F6B-9	10-24493	147
F6B-9	10-24515	149
F6B-9	10-24562	151
F6B-9	10-24563	153
F6B-9	10-24593	155
F6B-9	10-24633	157

Pump	Art. No.	Page
F7B-9	10-11236	158
F7B-9	10-13374	161
F7B-9	10-21876	162
F7B-9	10-22144	163
F7B-903	10-22147	164
F7B-9	10-22335	165
F7B-9	10-22354	166
F7B-9	10-24014	167
F7B-9	10-24017	168
F7B-9	10-24020	169

F7B-903	10-24028	170
F7B-903	10-24057	171
F7B-9	10-24061	172
F7B-9	10-24103	173
F7B-903	10-24126	174
F7B-9	10-24127	177
F7B-9	10-24139	178
F7B-9	10-24179	179
F7B-9	10-24183	180
F7B-903	10-24218	181
F7B-9	10-24235	182
F7B-9	10-24244	183
F7B-9	10-24253	185
F7B-9	10-24277	186
F7B-9	10-24280	187
F7B-903	10-24305	188
F7B-9	10-24329	189
F7B-9	10-24349	191
F7B-9	10-24365	193
F7B-9	10-24386	195
F7B-9	10-24390	197
F7B-9	10-24394	199
F7B-9	10-24398	201
F7B-9	10-24431	203
F7B-9	10-24445	205
F7B-02/903	10-24475	207
F7B-9	10-24524	209
F7B-903	10-24535	211
F7B-903	10-24542	213
F7B-9	10-24567	215
F7B-9	10-24580	217
F7B-9	10-24630	219
F7B-9	10-24637	221
F7B-9	10-24654	223
F7B-9	10-24666	225
F7B-9	10-24667	227
F7B-9	10-24753	229

Pump	Art. No.	Page
F75B-9	10-13141	231
F75B-9	10-13153	233
F75B-9	10-13170	235
F75B-9	10-13265	237
F75B-9	10-13286	239
F75B-9	10-13306	241
F75B-9	10-24413	243

Pump	Art. No.	Page
F8B-9	10-13088	244
F8B-9	10-13096	245
F8B-9	10-13180	247
F8B-9	10-13234	249
F8B-9	10-13263	251
F8B-9	10-13305	253
F8B-903	10-21915	254
F8B-9	10-22096	255
F8B-903	10-24026	256
F8B-9	10-24091	257
F8B-9	10-24096	258
F8B-9	10-24130	259
F8B-9	10-24181	260
F8B-9	10-24315	261

Pump	Art. No.	Page
F9B-9	10-13080	262
F9B-9	10-13095	265
F9B-905	10-13166	267
F9B-905	10-13171	269
F9B-9	10-24006	270
F9B-9	10-24072	271
F9B-9	10-24090	272
F9B-9	10-24159	273
F9B-9	10-24239	274
F9B-9	10-24308	277
F9B-9	10-24430	279

Pump	Art. No.	Page
F95B-9	10-13165	281
F95B-9	10-13248	283

High Speed

Pump	Art. No.	Page
F4B-9	10-24214	284
F4B-9	10-24290	285

Pump	Art. No.	Page
F5B-9	10-13223	287
F5B-9	10-13236	289
F5B-9	10-13353	291
F5B-9	10-13354	293
F5B-9	10-13468	295
F5B-9	10-13469	297
F5B-9	10-24076	298
F5B-9	10-24225	301
F5B-9	10-24228	303
F5B-9	10-24230	305
F5B-9	10-24372	306
F5B-9	10-24461	309

Pump	Art. No.	Page
F6B-9	10-13356	311
F6B-9	10-13357	313
F6B-9	10-13449	315
F6B-9	10-13470	317
F6B-9	10-24232	319
F6B-9	10-24302	321
F6B-9	10-24316	323

Pump	Art. No.	Page
F7B-9	10-24338	324
F7B-9	10-24428	327

Dual

Pump	Art. No.	Page
F35B-9	10-24143	328
F35B	10-24638	331
F35B/F35B-9	10-35065	332
F35B/F35B-9	10-35066	333
F35B-9	10-35141	334
F35B/F35B-9	10-35731	337

Pump	Art. No.	Page
F4B/F4B-8	10-24095	338
F4B/F4B-9	10-24097	339
F4B/F4B-9	10-24124	340
F4B-9	10-24144	341
F4B-9	10-24164	342
F4B-9	10-24165	343
F4B-9	10-24166	344
F4B-9	10-24167	345
F4B-9	10-35142	346
F4B-9	10-35205	347

Pump	Art. No.	Page
F5B/F4B-9	10-24047	348

Pump	Art. No.	Page
F7B/F9B	10-13064	349
F75B-9/F7B-9	10-13142	351

F35B-9/903 Impeller Pump

Art. No. 10-24178-3

Part no.	Description GB	Position	Quantity
0.0279.501	SCREW M4X8 ISO1207	11	4
0.0371.028	RETAIN. RING BORE D28 DIN472 SPRST	17	1
0.0415.342	COIL PIN 4X36 DIN7343 ST	18	1
0.2173.432	O-RING 11.3X2.4 SS1586 NBR70	15	1
0.2233.010	LIP SEAL 12X24X7 DPSM	14	2
0.3431.441	BALL BEARING 6001 ST	16	2
01-24177	BODY F35B-902	1	1
01-42400	PIN F35B-/F7B/F70B	7	1
01-42910	CAM 1/1 F35B-	3	1
01-43240	GASKET F35B-	9	1
01-45087	WEARPLATE F35B-	6	1
01-45542	SPACER F35B-902	8	1
01-45543	SHAFT F35B-902	2	1
01-45570	ENDCOVER F35B-9 (VP)	4	1
01-45694	SPACER F35B-9	19	1
01-46790-01	WASHER D7.5XD4X1 CU	13	1
01-46794-03	SCREW 8-32UNCX8	12	1
08-808B-11	IMPELLER VP3586501	5	1

The product, i.e. concept, design and construction, is the property of SPX Johnson Pump Marine AB

10-24178 pump F35B-9

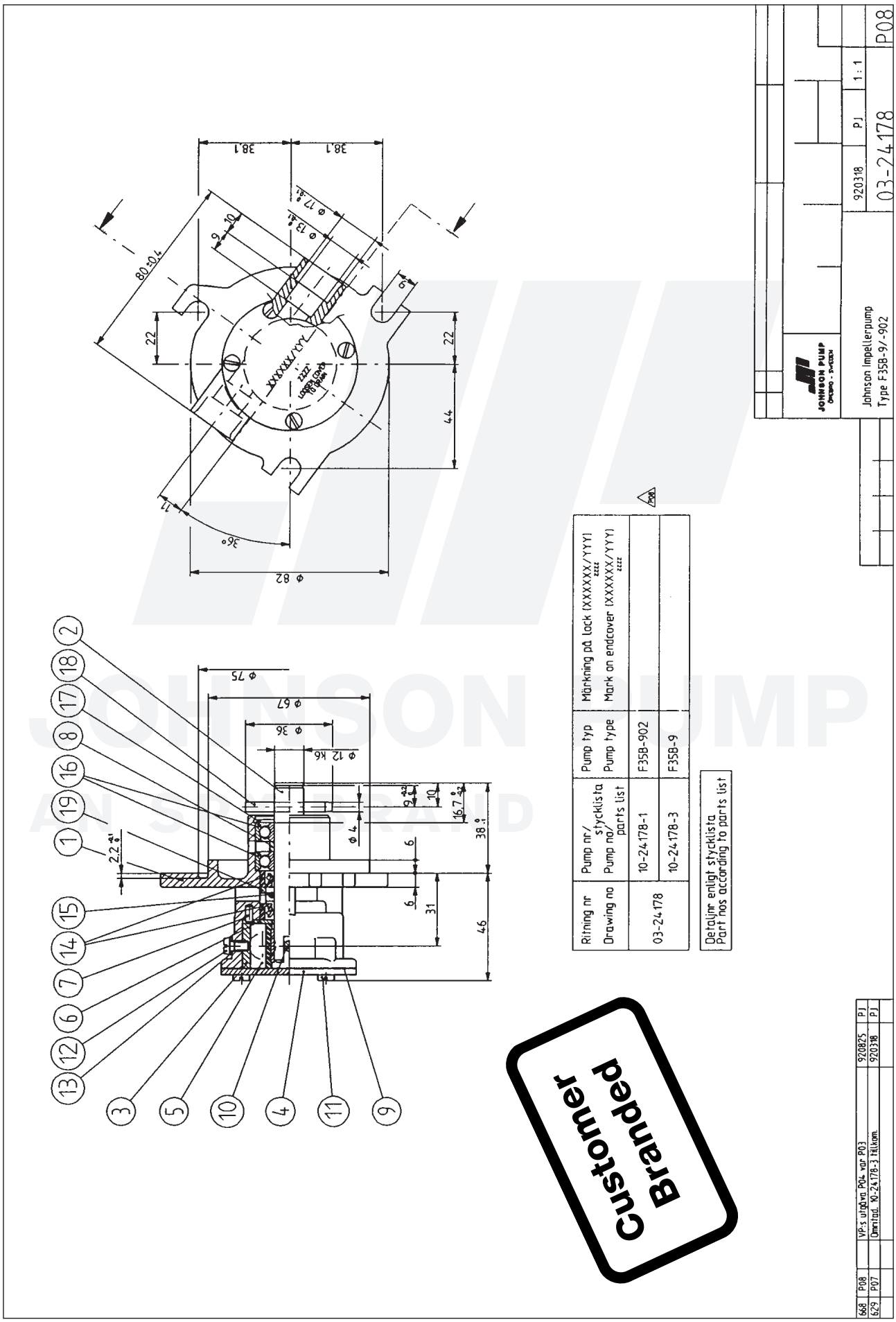

10-24707 pump F35B-9

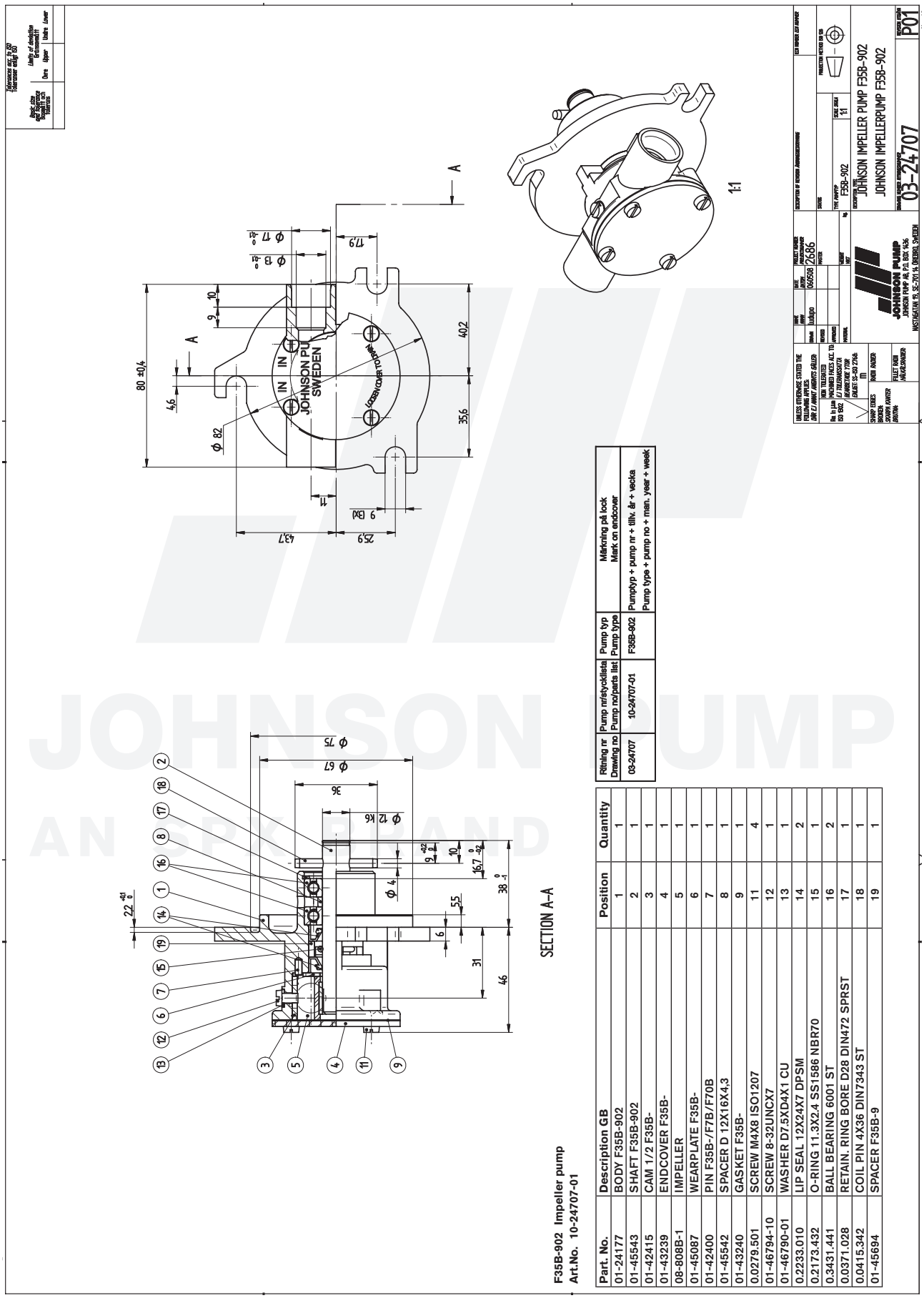

Part. No.	Description GB	Position	Quantity
01-24177	BODY F35B-902	1	1
01-45543	SHAFT F35B-902	2	1
01-42415	CAM 1/2 F35B-	3	1
01-43239	ENDCOVER F35B-	4	1
08-808B-1	IMPELLER	5	1
01-45087	WEARPLATE F35B-	6	1
01-42400	PIN F35B-/F7B/F70B	7	1
01-45542	SPACER D 12X16X4,3	8	1
01-43240	GASKET F35B-	9	1
0.0279.501	SCREW M4X8 ISO1207	11	4
01-46794-10	SCREW 8-32UNCX7	12	1
01-46790-01	WASHER D7.5XD4X1 CU	13	1
0.2233.010	LIP SEAL 12X24X7 DPSM	14	2
0.2173.432	O-RING 11.3X2.4 SS1586 NBR70	15	1
0.3431.441	BALL BEARING 6001 ST	16	2
0.0371.028	RETAIN. RING BORE D28 DIN472 SPRST	17	1
0.0415.342	COIL PIN 4X36 DIN7343 ST	18	1
01-45694	SPACER F35B-9	19	1

JOHNSON PUMP
AN SPX BRAND

The product, i.e. concept, design and construction, is the property of SPX Johnson Pump Marine AB

10-31934 pump F35B-9

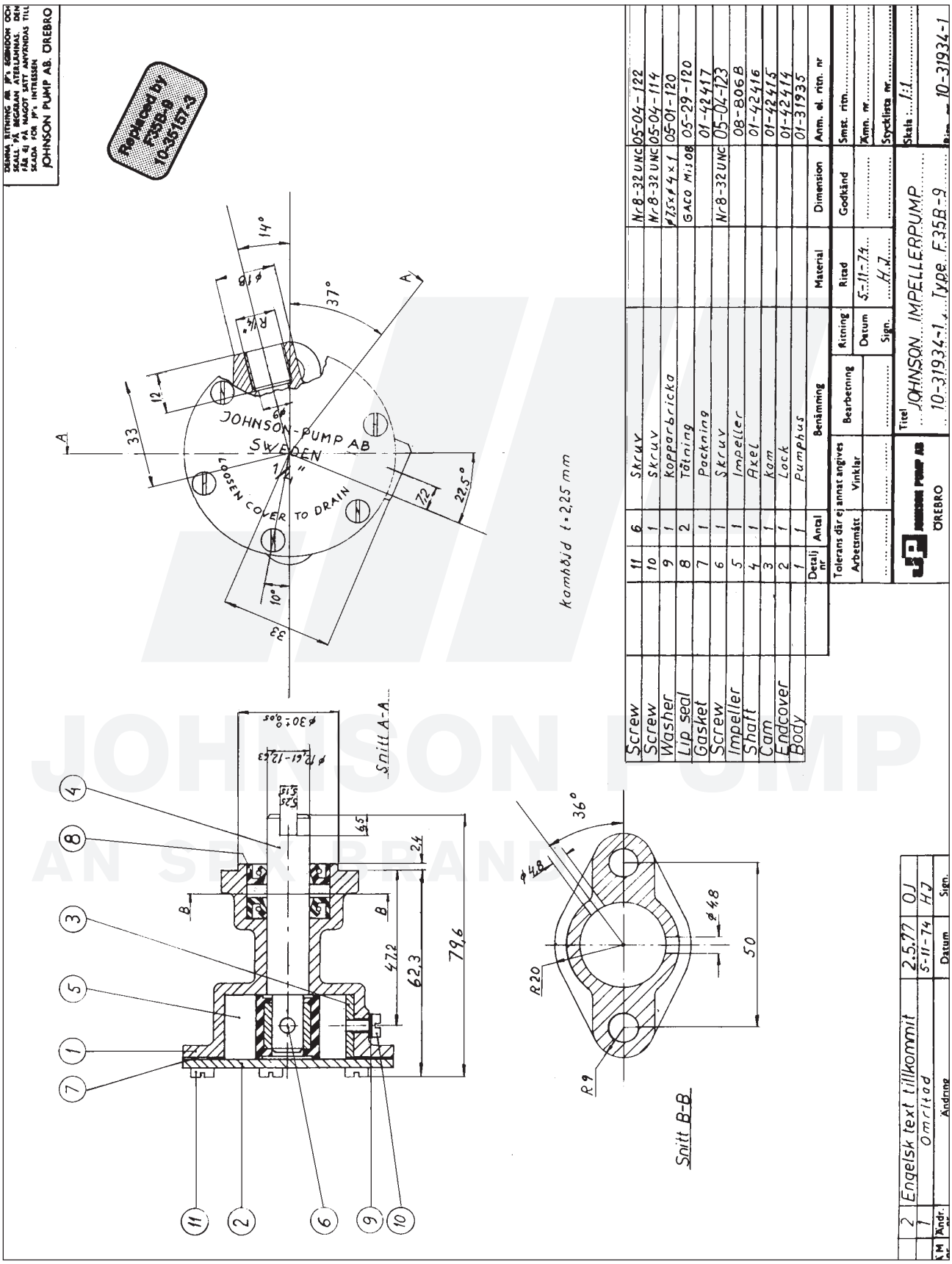

10-32280 pump F35B-9

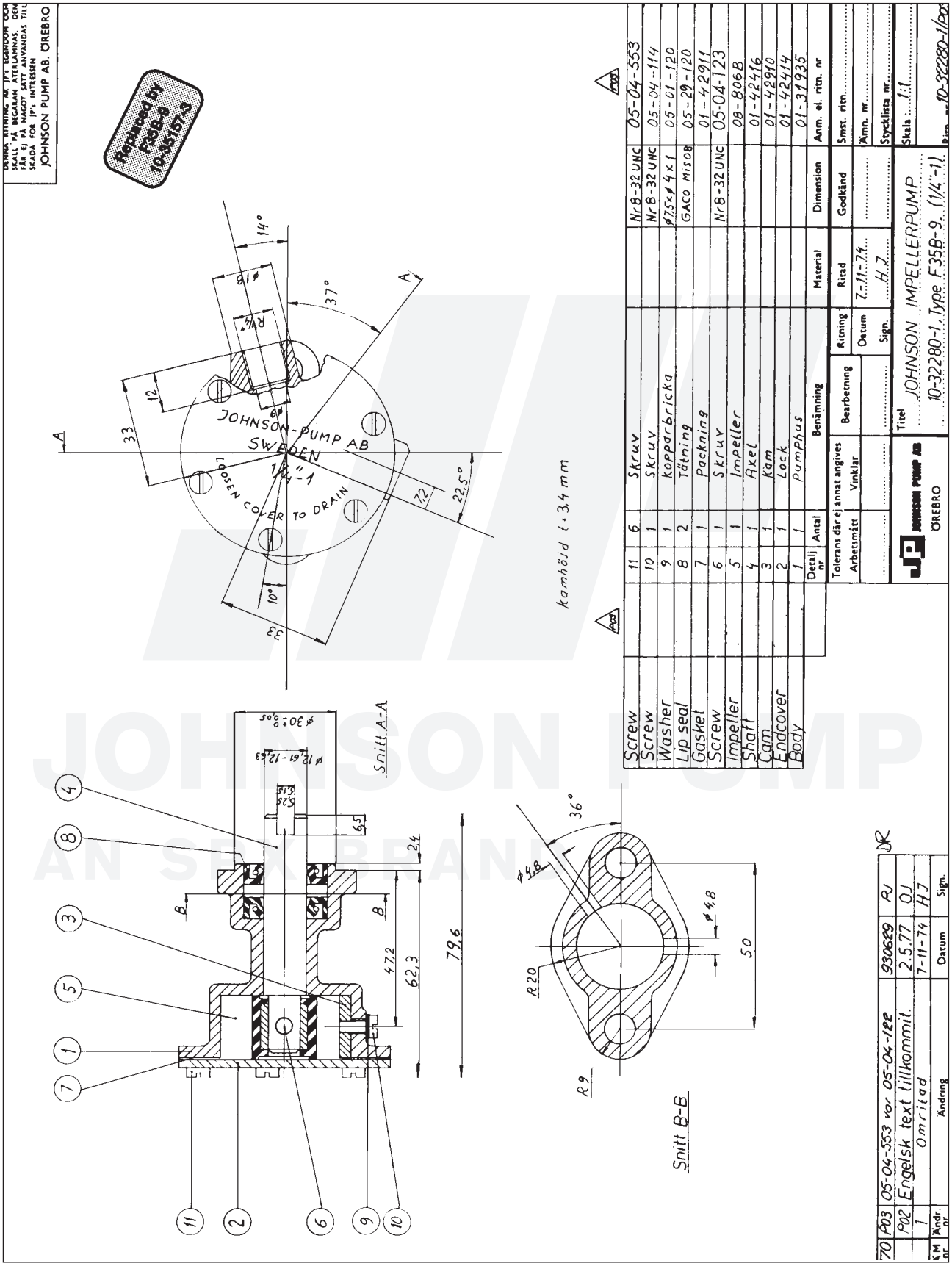

The product, i.e. concept, design and construction, is the property of SPX Johnson Pump Marine AB

10-32388 pump F35B-9

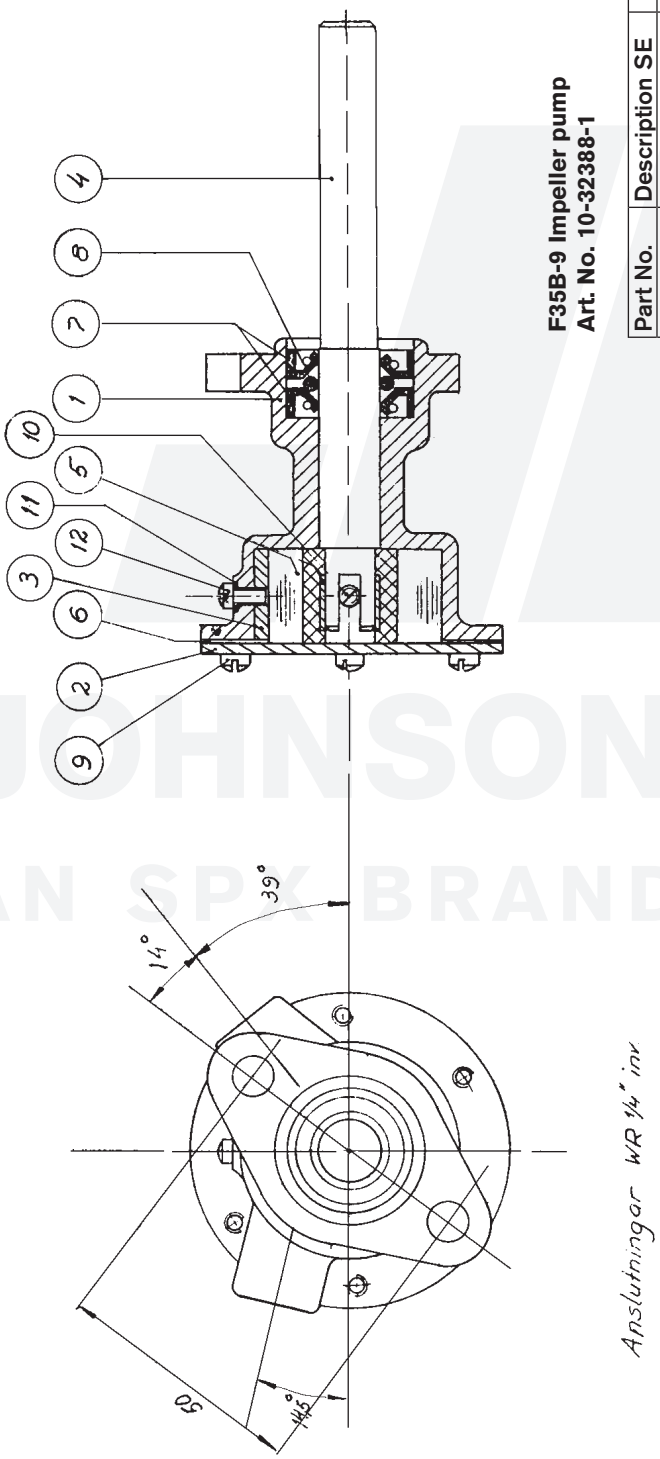

F35B-9 Impeller pump
Art. No. 10-32388-1

Part No.	Description SE	Position	Quantity
01-31935	Pumphus	1	1
01-42414	Lock	2	1
01-42415	Kam	3	1
01-42870	Axel	4	1
08-806B	Impeller	5	1
01-42417	Packning	6	1
05-29-120	Tätning	7	2
05-06-500	O-ring	8	1
05-04-122	Skruv	9	6
05-04-123	Skruv	10	1
05-01-120	Kopparbricka	11	1
05-04-114	Skruv	12	1

Tolerans där ej annat angivet
Arbetsmått Vinklar
Bearbetning
Riktning
Datum 9.10.1970
Sign.
Ritad
Godkänd
Ersatt rit.
Ersatt av
Styckliste nr
Skala: 1:1
Rit. nr 10-32388-1
Johnson-Mikall
Titel Impeller pump F35B-9, 1½"

Nr	Nr		Datum	Sign.
22	1	Impeller P42412 ersatt	2.6.1971	

JOHNSON PUMP
AN SPX BRAND

10-32412 pump F35B-9

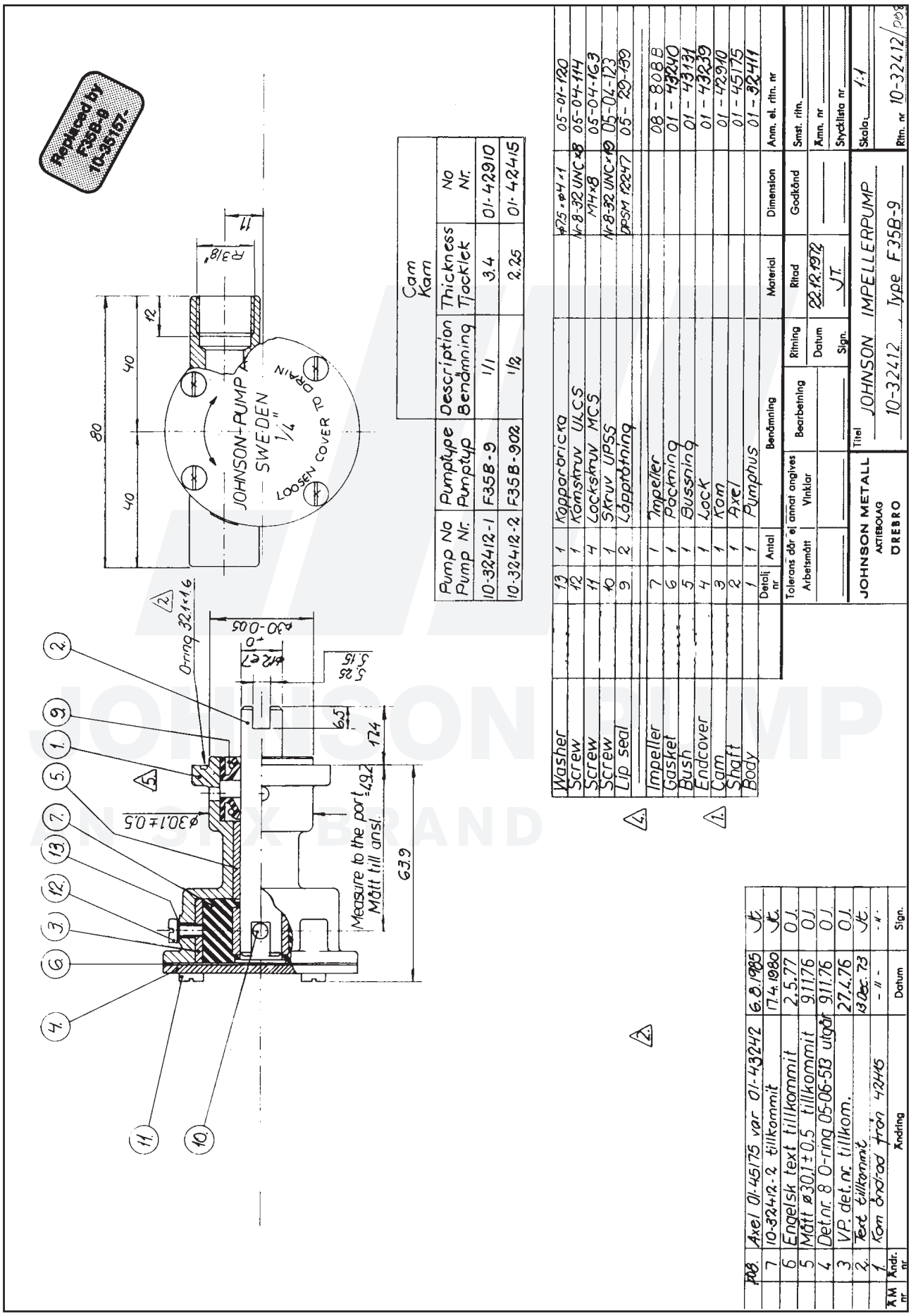

The product, i.e. concept, design and construction, is the property of SPX Johnson Pump Marine AB

10-32415 pump F35B-9

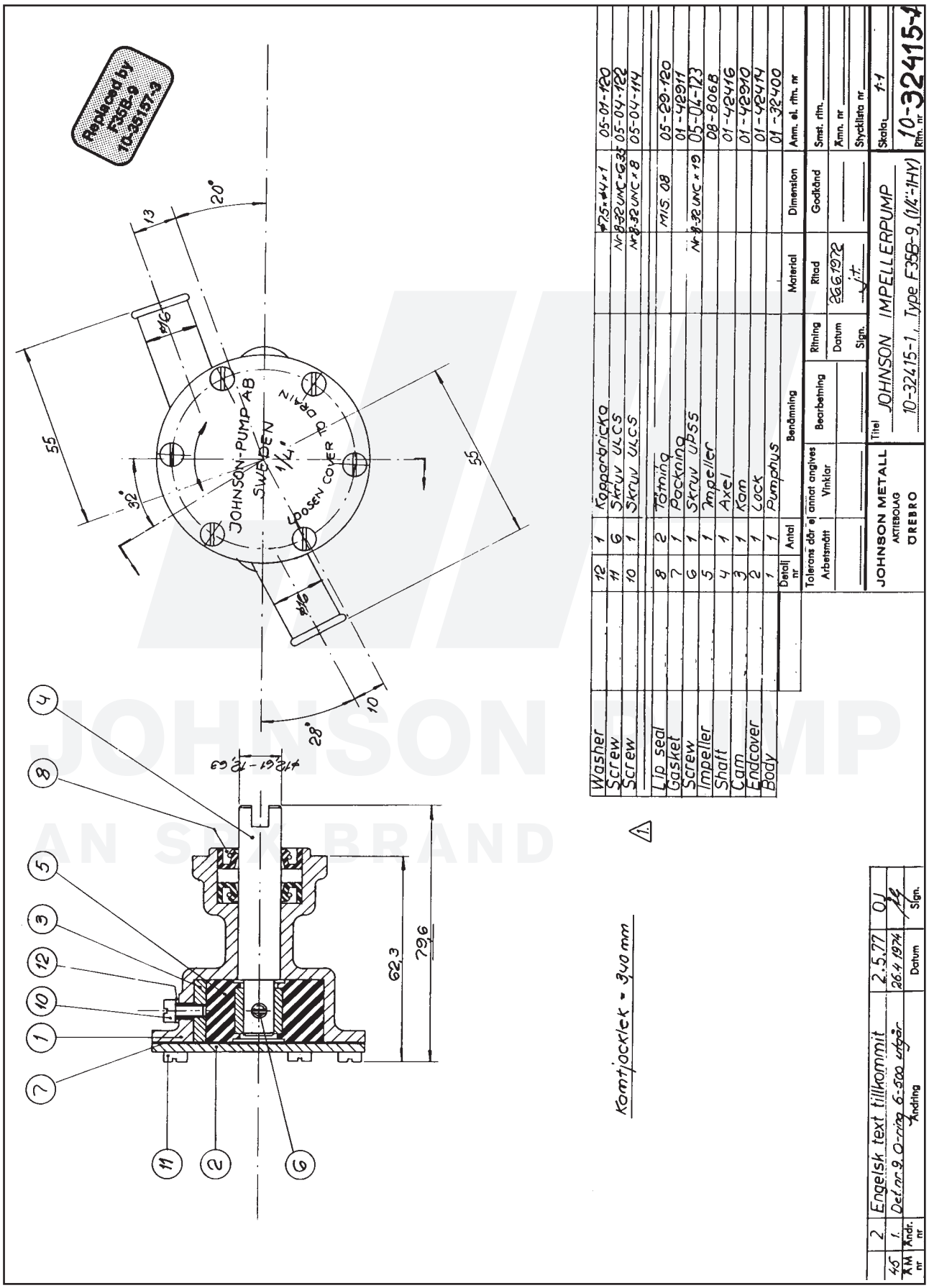

10-35015 pump F35B-9

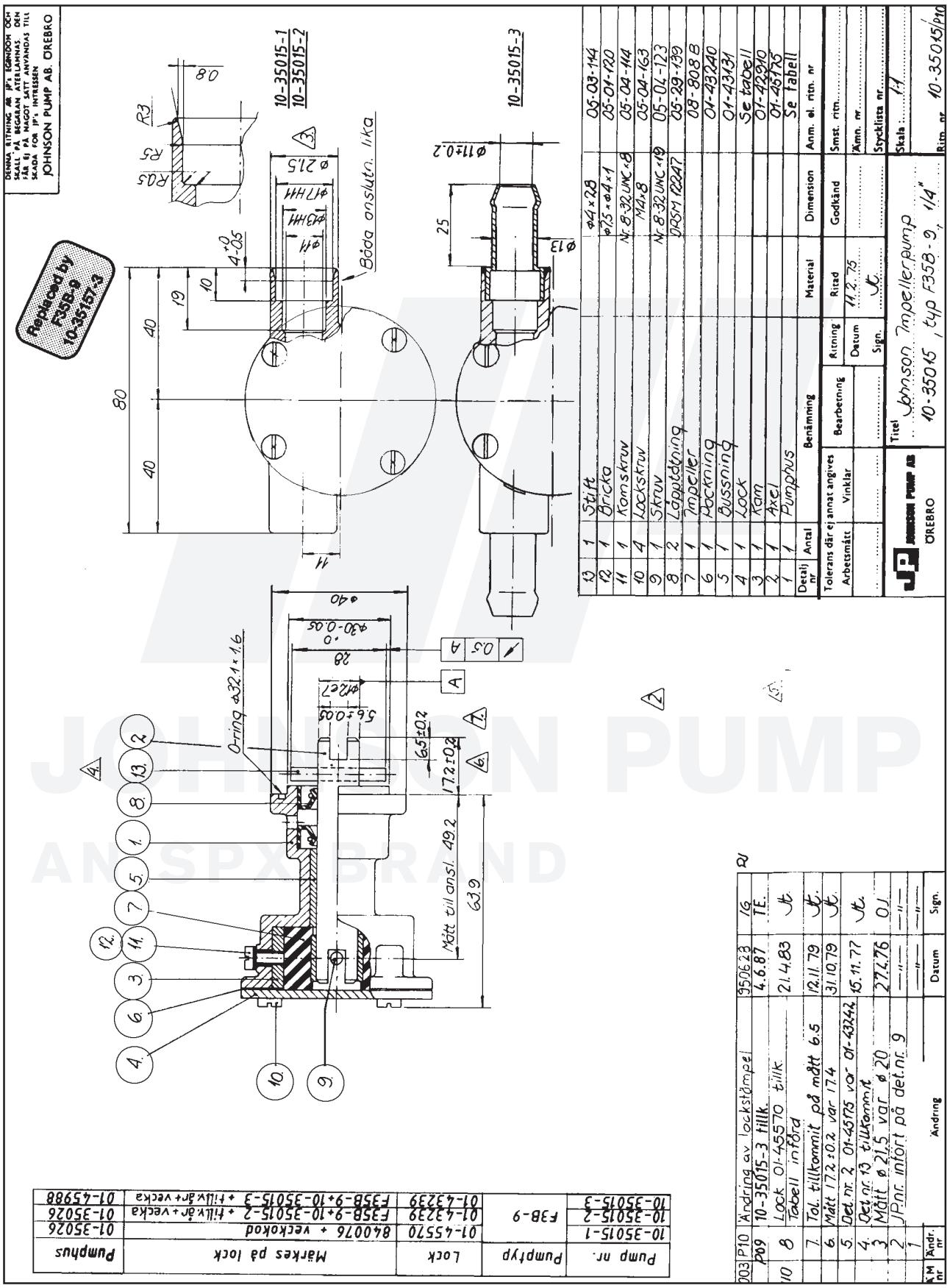

JOHNSON PUMP
AN SPX BRAND

The product, i.e. concept, design and construction, is the property of SPX Johnson Pump Marine AB

10-35052 pump F35B-9

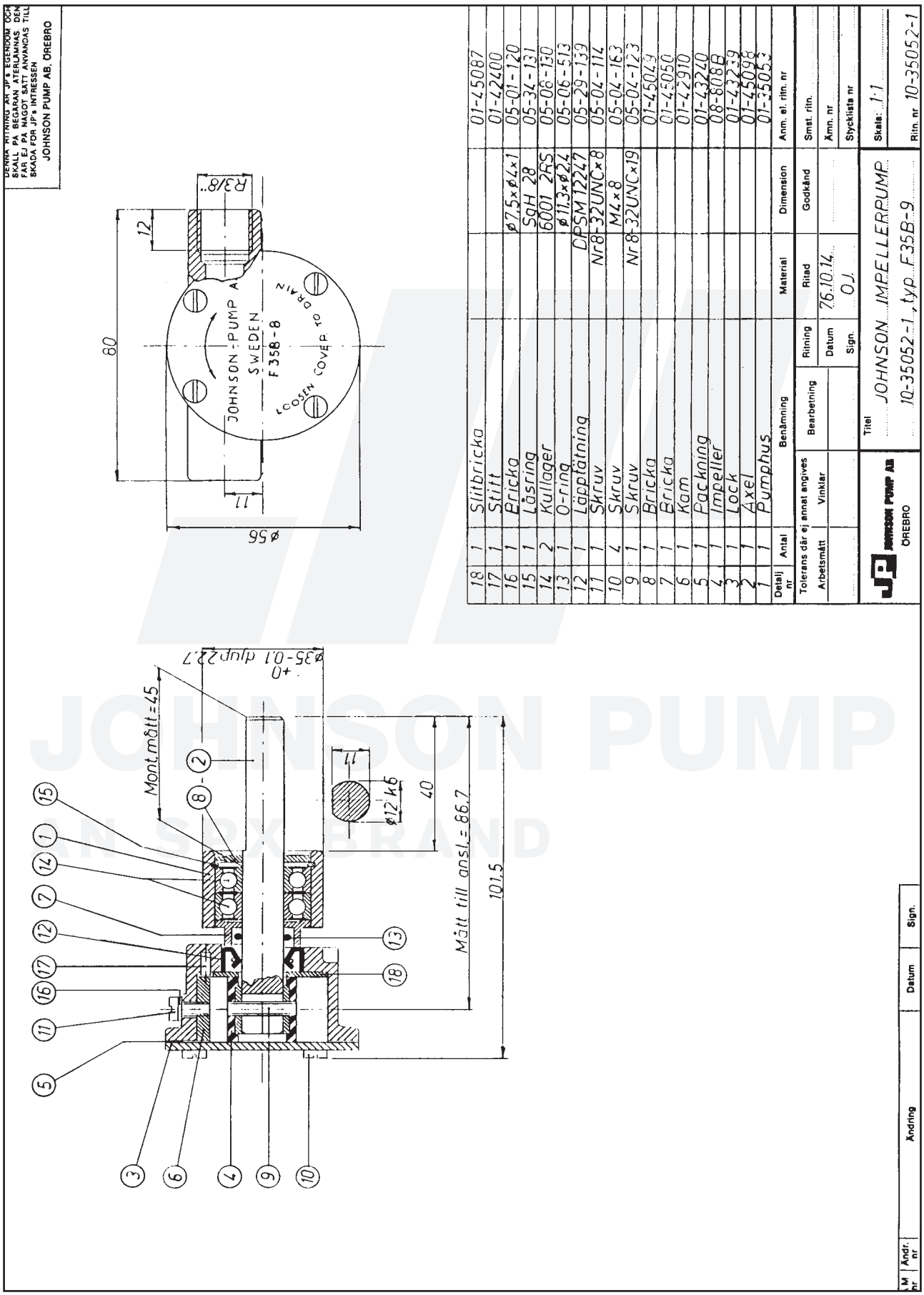

10-35088 pump F35B-9

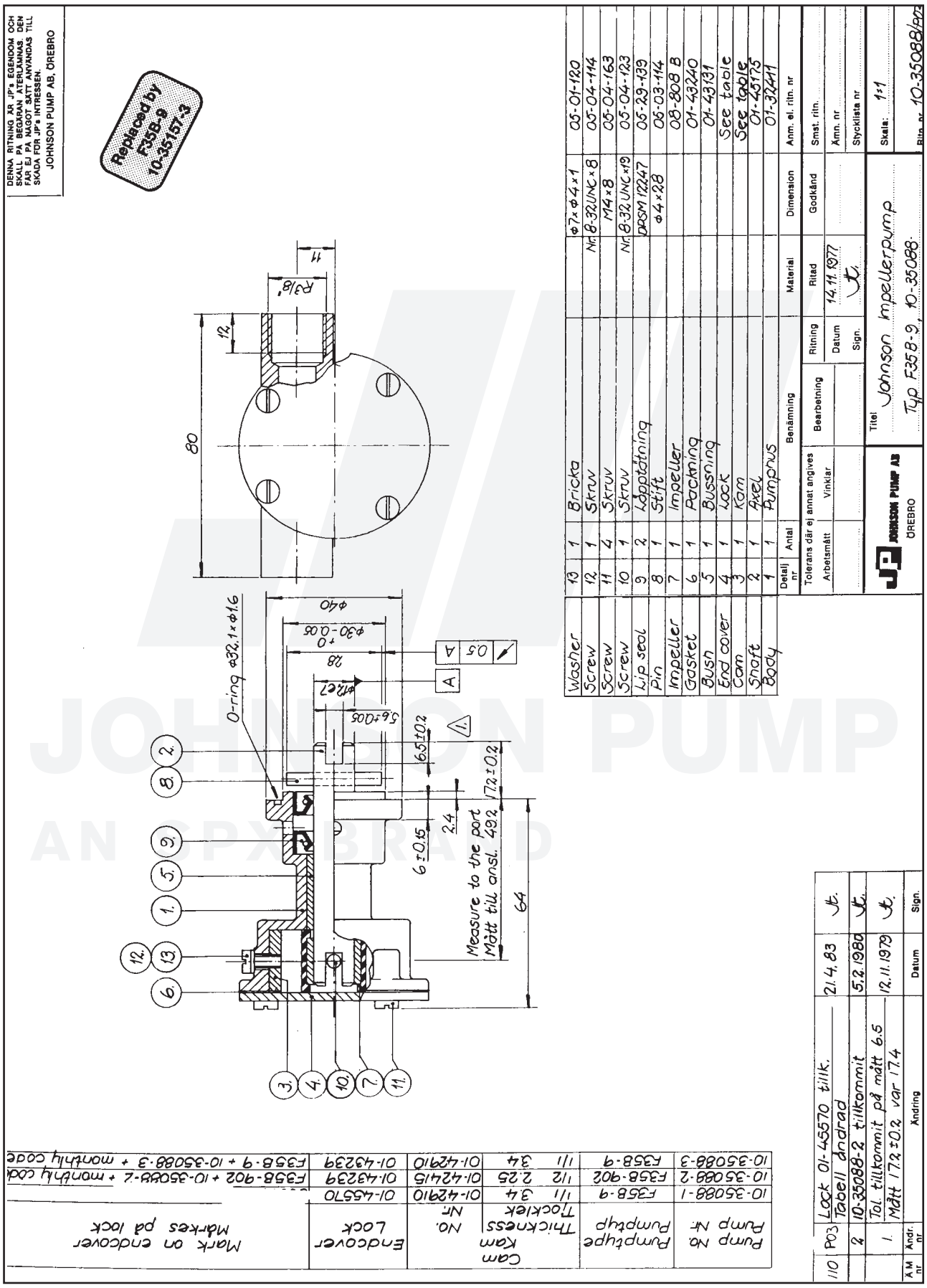

The product, i.e. concept, design and construction, is the property of SPX Johnson Pump Marine AB

10-35091 pump F35B-9

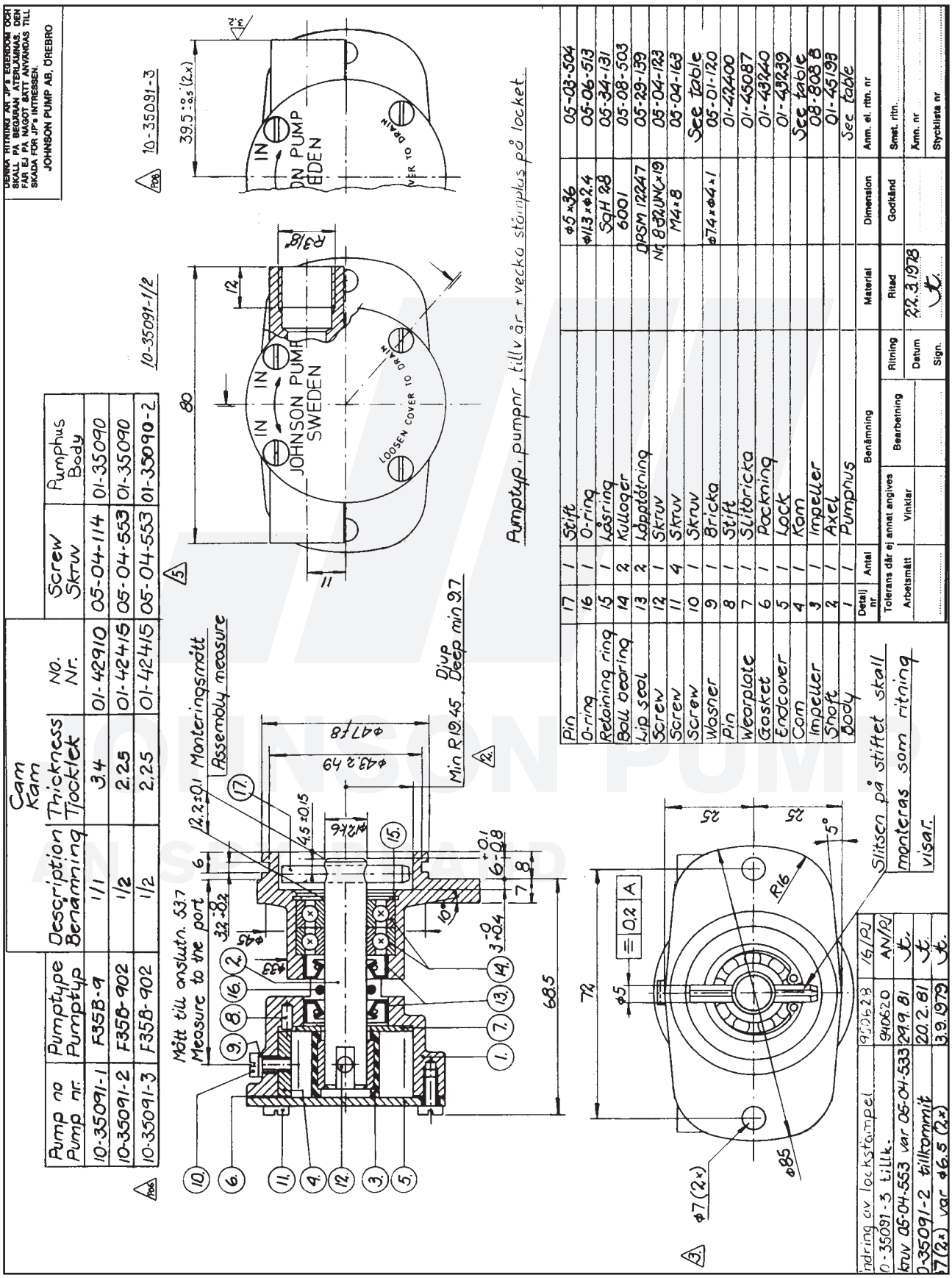

10-35118 pump F35B-9

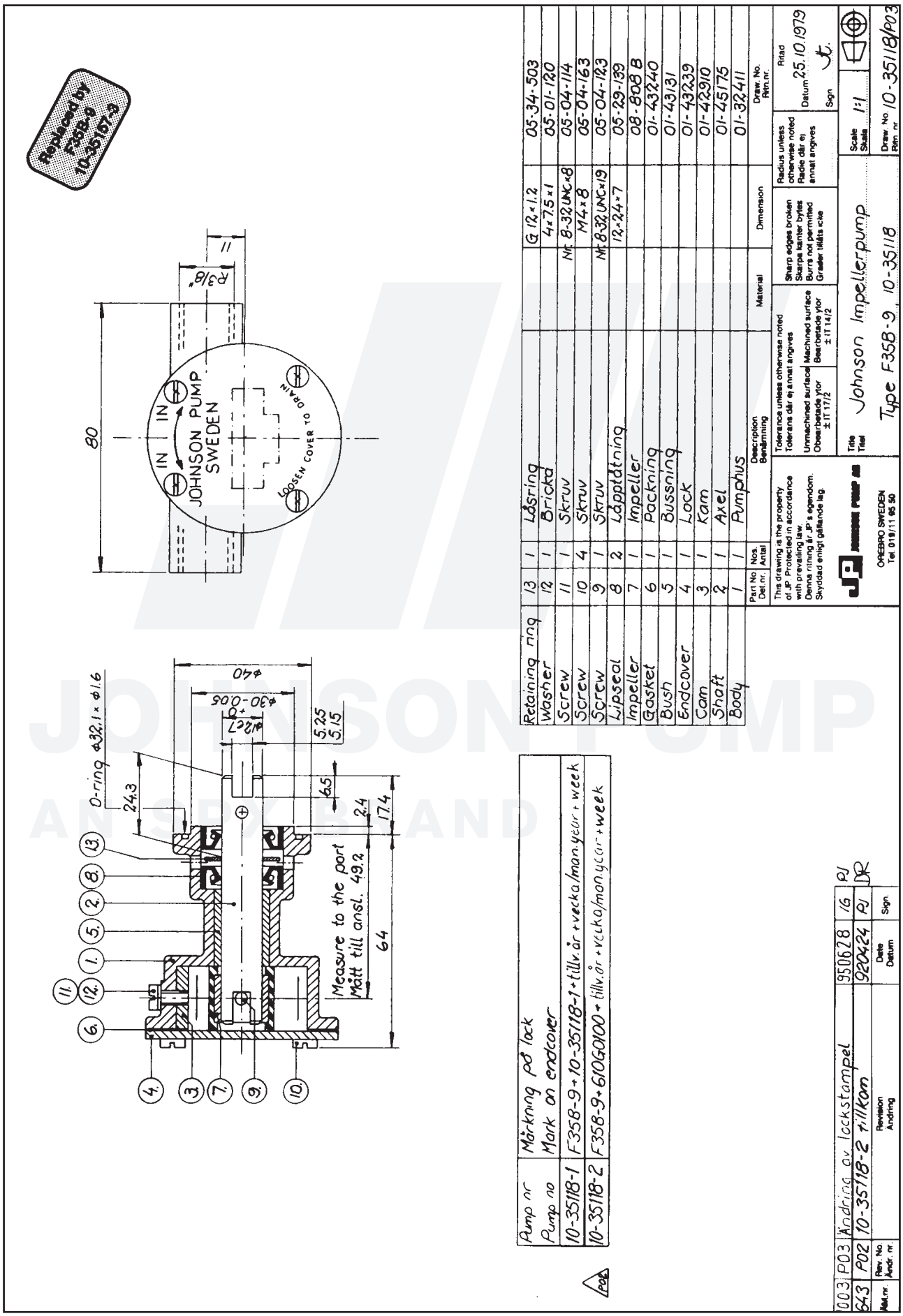

The product, i.e. concept, design and construction, is the property of SPX Johnson Pump Marine AB

10-35122 pump F35B-9

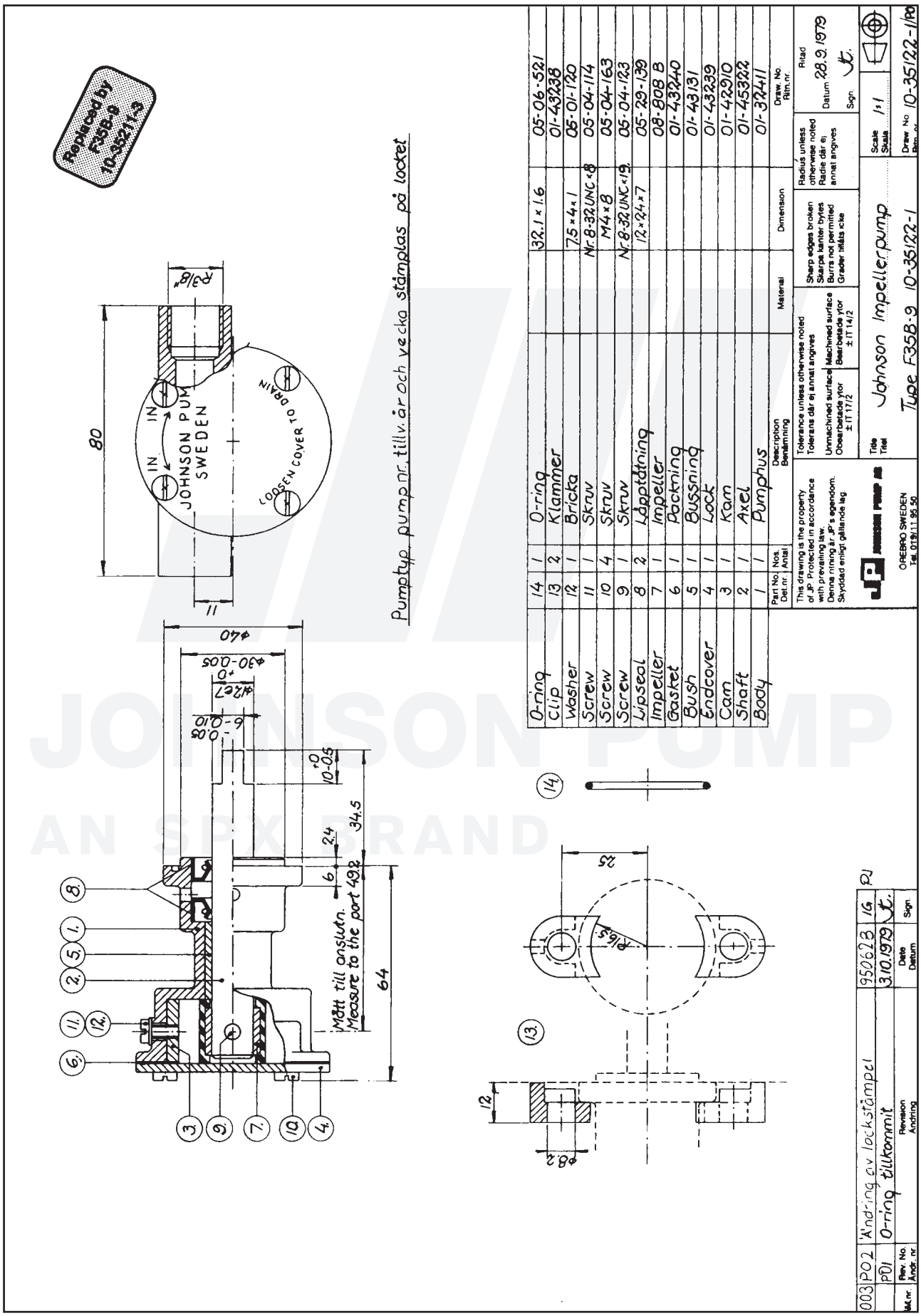

10-35157 pump F35B-9

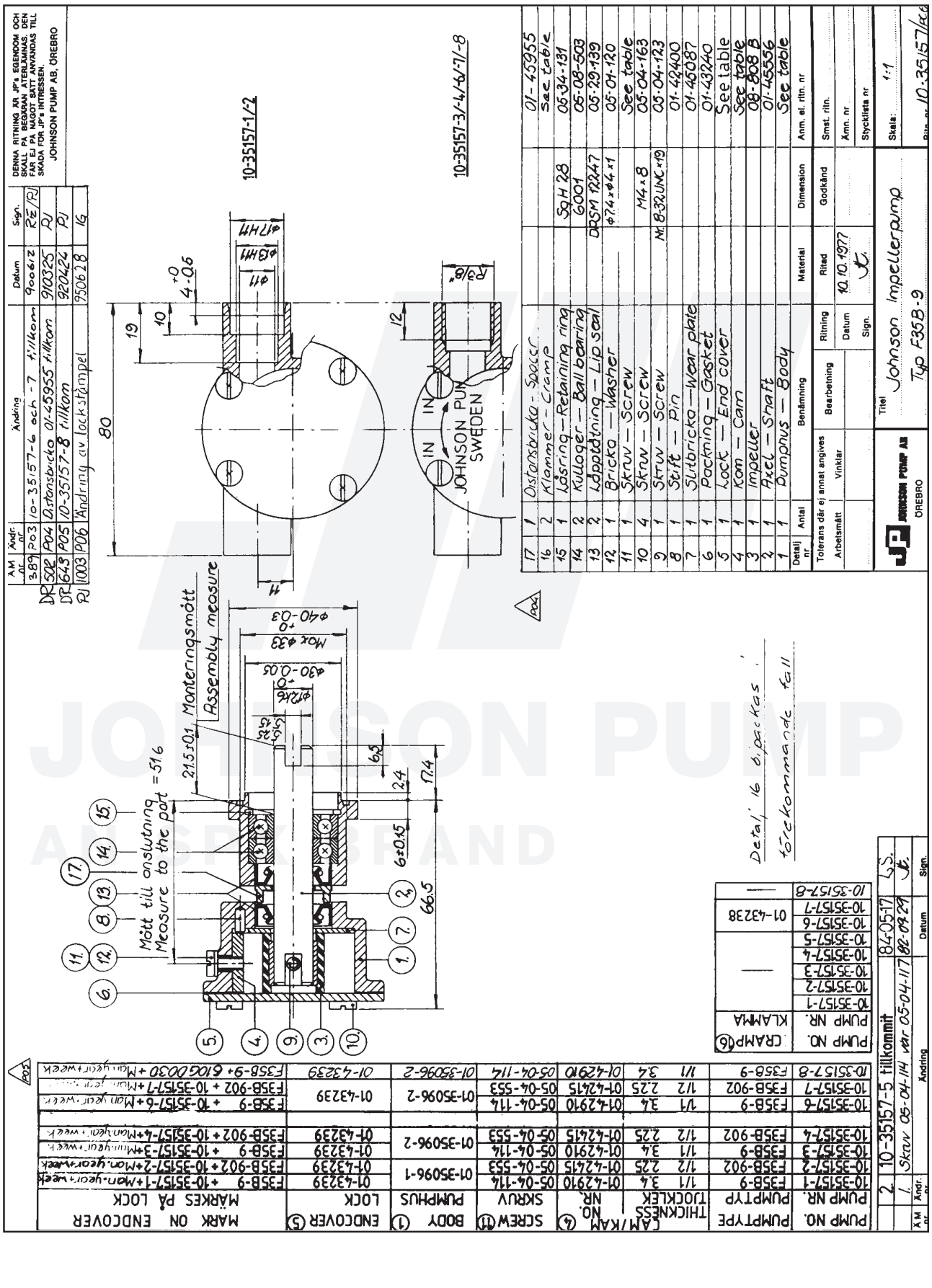

The product, i.e. concept, design and construction, is the property of SPX Johnson Pump Marine AB

10-35187 pump F35B-9

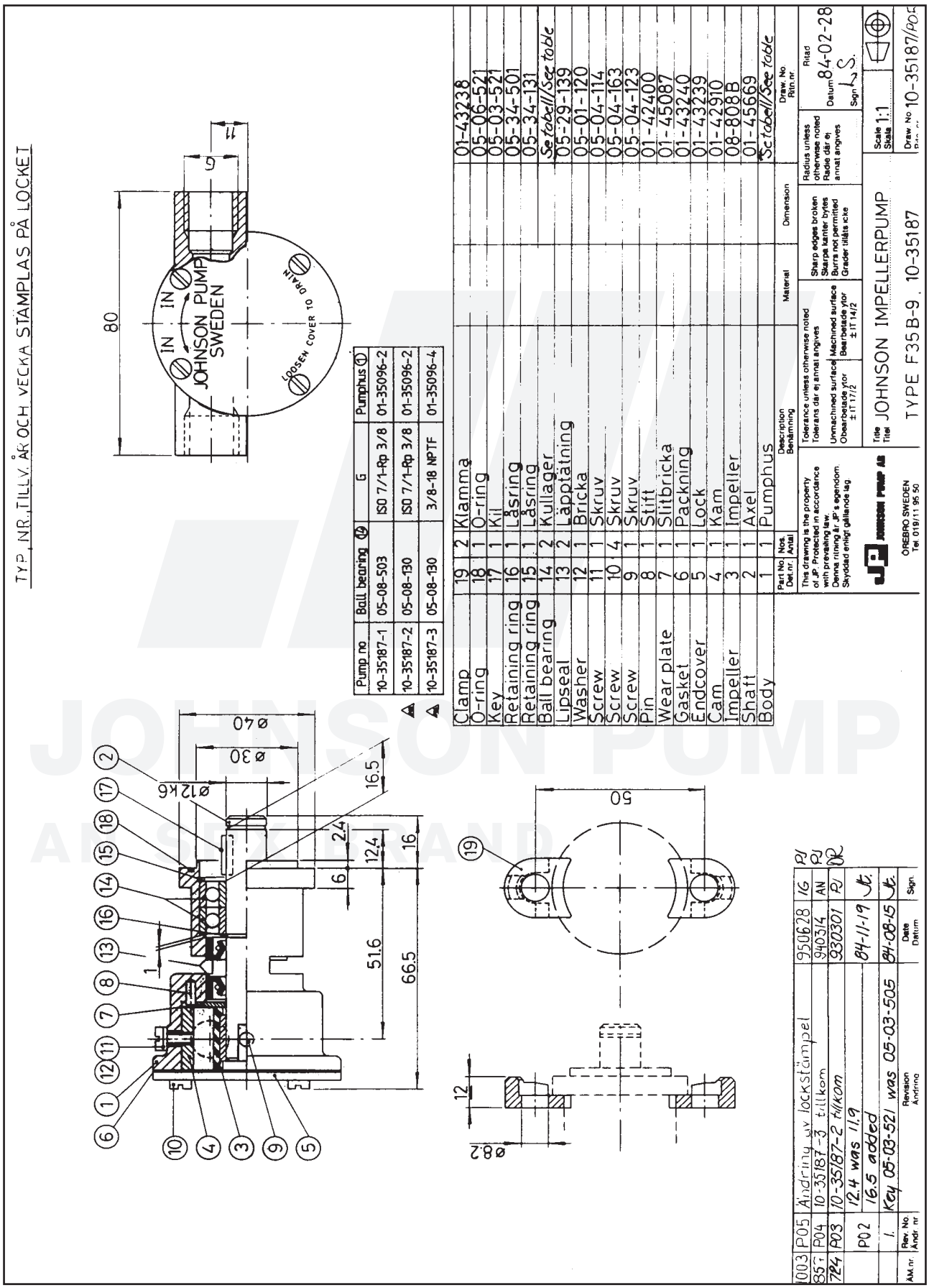

10-35211 pump F35B-9

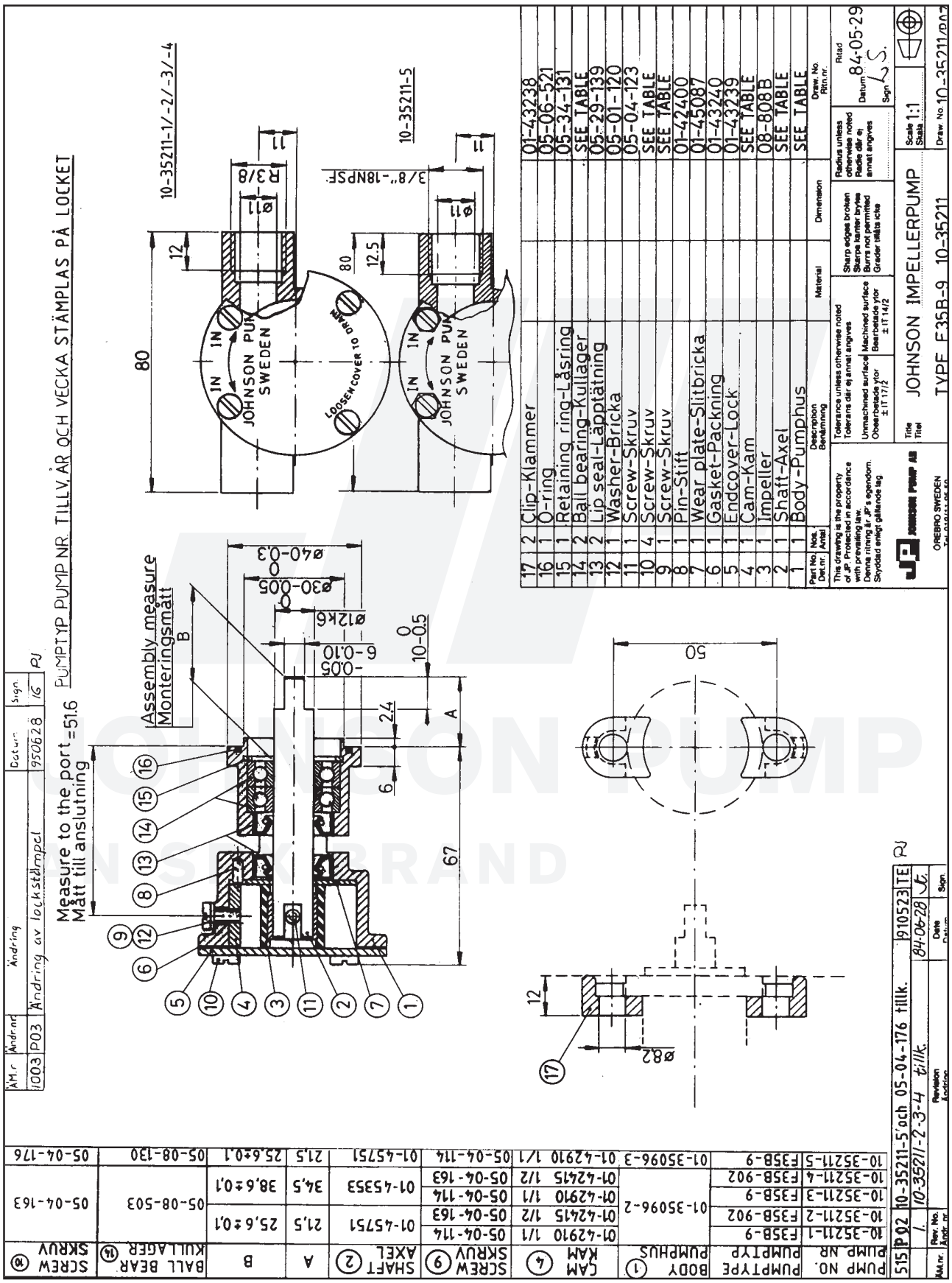

The product, i.e. concept, design and construction, is the property of SPX Johnson Pump Marine AB

10-35288 pump F35B-9

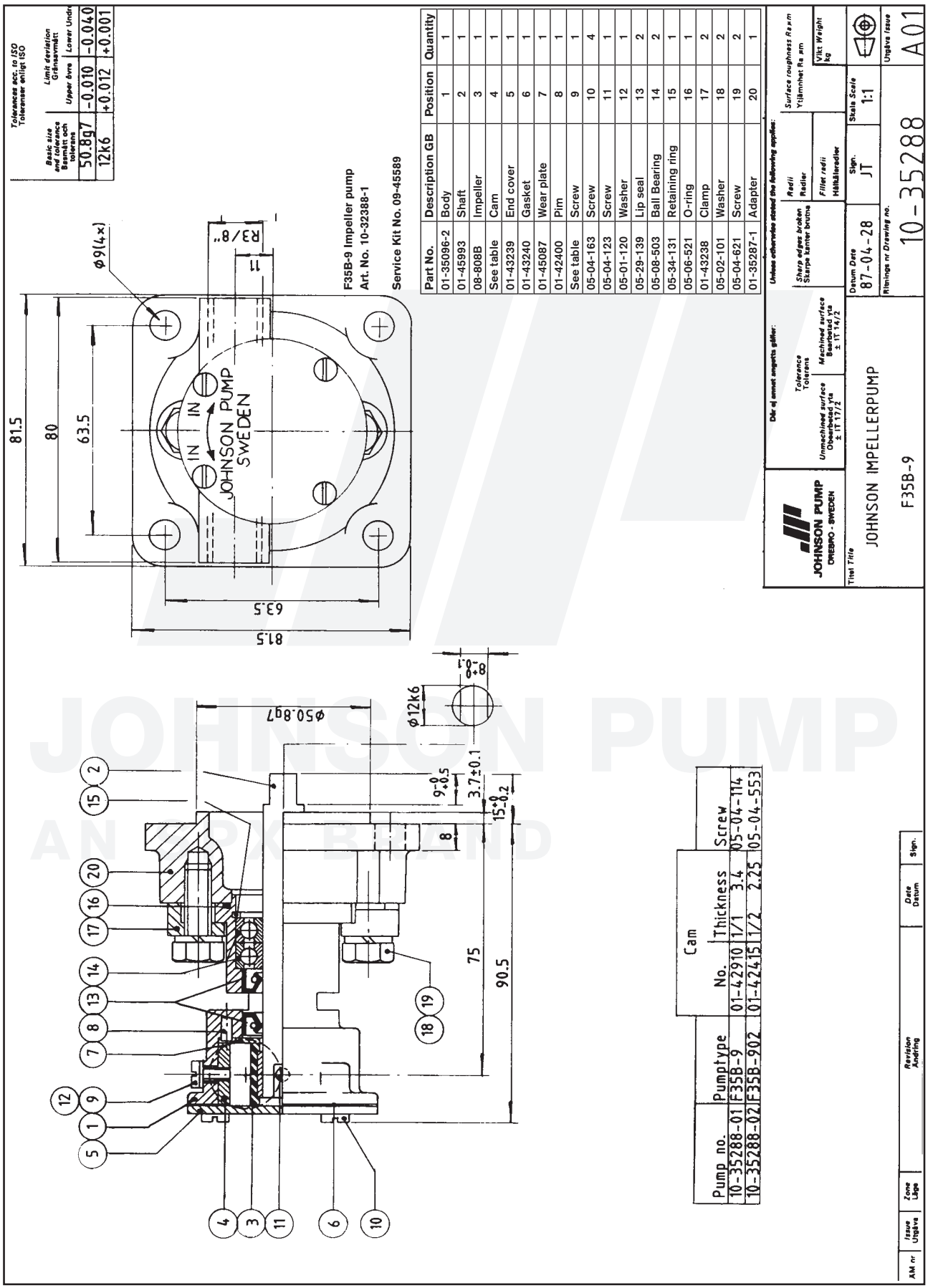

JOHNSON PUMP
AN IDEX BRAND

10-13337 pump F4B-903

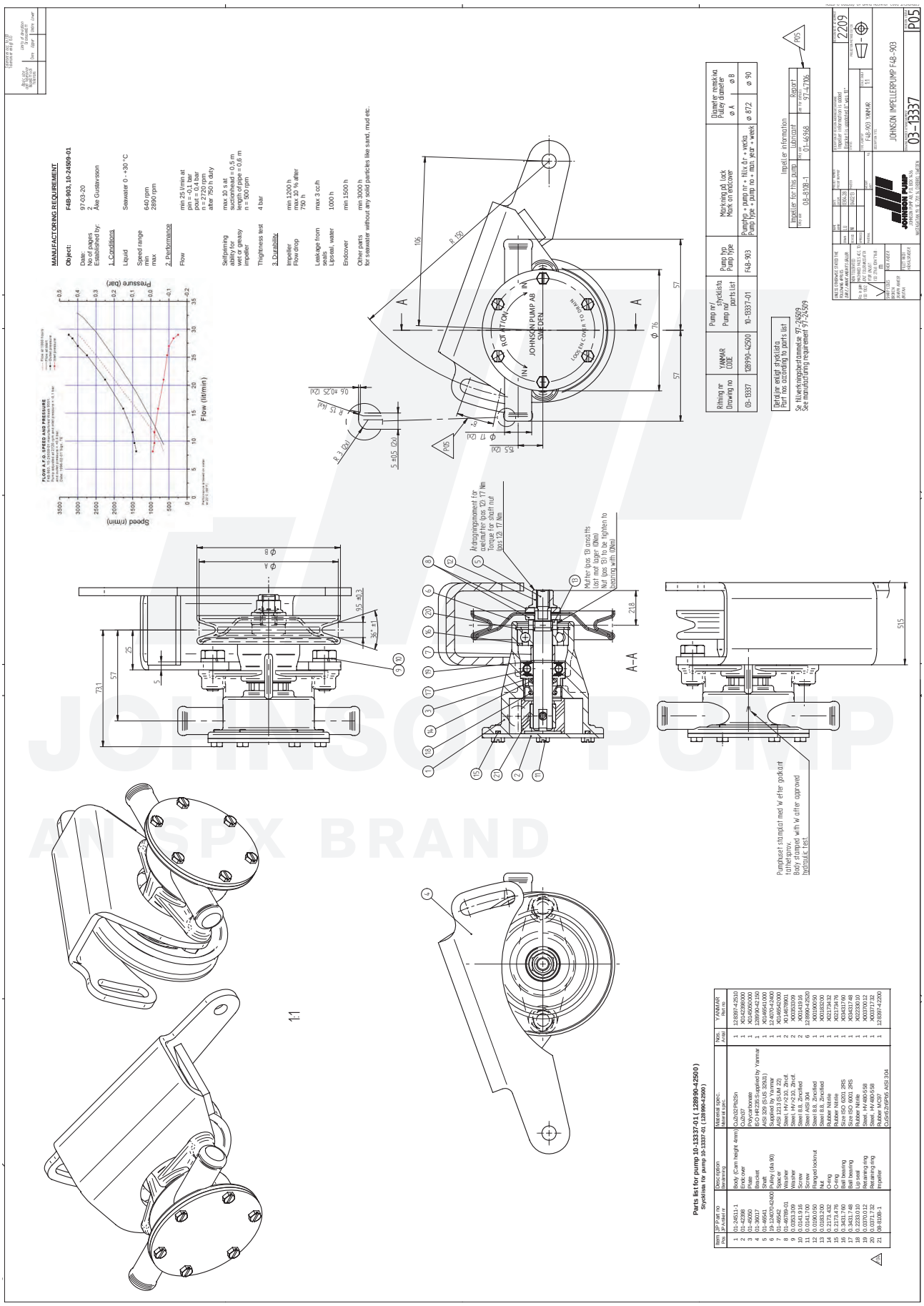

The product, i.e. concept, design and construction, is the property of SPX Johnson Pump Marine AB

10-24319 pump F4B-9

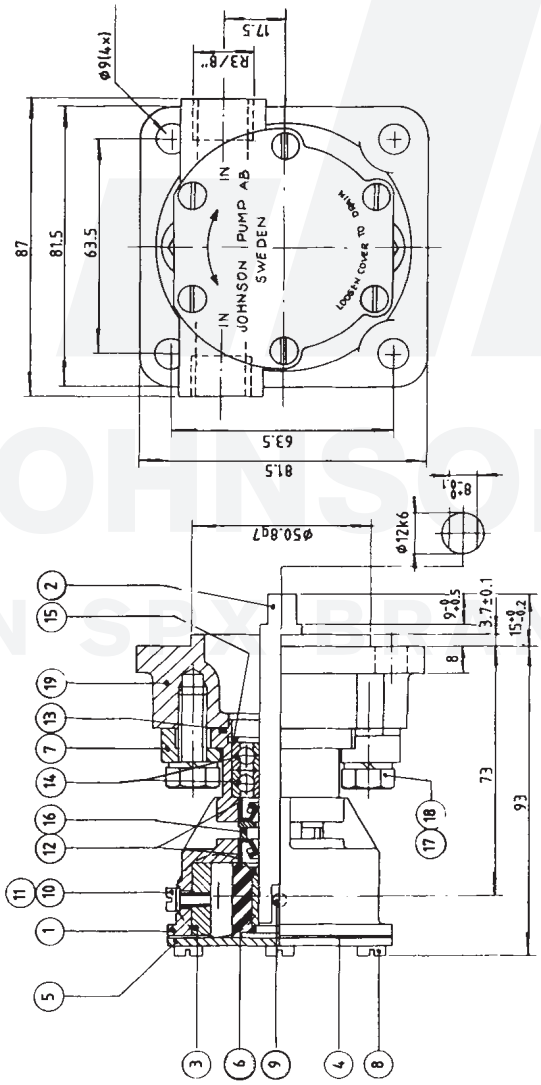

Pump no.	Pumptype	Cam No.	Cam Thickness	Screw	Washer No.	Washer Pcs
10-24319-01	F4B-9	01-42389	1/1 5.3	05-04-114	05-01-120	1
10-24319-02	F4B-903	01-45288	2/3 4.0	05-04-163		2
10-24319-03	F4B-902	01-45084	1/2 2.5			

*	1	Service kit	09-45866
19	1	Mellanfläns - Adapter	01-35287-1
18	2	Bricka - Washer	05-02-101
17	2	Skruv - Screw	05-04-621
16	1	Distansbricka - Spacer	01-45955
15	1	Låsring - Retaining ring	05-34-131
14	2	Kullager - Ballbearing	05-08-503
13	1	O-ring	05-06-521
12*	2	Läppätning - Lipseal	05-29-139
11	1	Bricka - Washer	See Table
10	1	Skruv - Screw	See Table
9	1	Skruv - Screw	05-04-124
8*	6	Skruv - Screw	05-04-163
7	2	Klamma - Clamp	01-43238
6*	1	Impeller	08-810 B
5	1	Lock - Endcover	01-45282
4*	1	Packning - Gasket	01-45284
3	1	Kam - Cam	See Table
2	1	Axel - Shaft	01-45993
1	1	Pumphus - Body	01-35239

Part no / Det nr | Ant / Antal | Description / Benämning | Material

JOHNSON PUMP ORSBRO - SWEDEN

Tolerance / Toleranser

Unmarked surface / Osmärkt yta ± 1T 11/2

Anodized surface / Beanodisad yta ± 1T 14/2

Unless otherwise stated the following applies:

Skarp kant kraken / Skarpa kanter brutna

Radii / Radier

Filler radii / Hålkörsradier

Surface roughness Ra µm / Ytåtmoten Ra µm

Vikt / Weight kg

Title / Titel

JOHNSON IMPELLERPUMP

TYPE F4B-9

Datum / Date 87-04-29

Sign JT

Skala / Scale 1:1

Ritningsnr / Drawing no 10-24319

Utgåva / Issue P01

Basic size / Nominal size / Basmått mm	Limits deviation / Gränsmått	
Upper limit	Lower limit	
50g7	-0.010	-0.040
12k6	+0.012	+0.001

Lat nr | Utgåva / Issue | Zone / Läge | Ändringsnr / Amending | Datum / Date | Sign

JOHNSON PUMP
AN SPX BRAND

10-24321 pump F4B-9

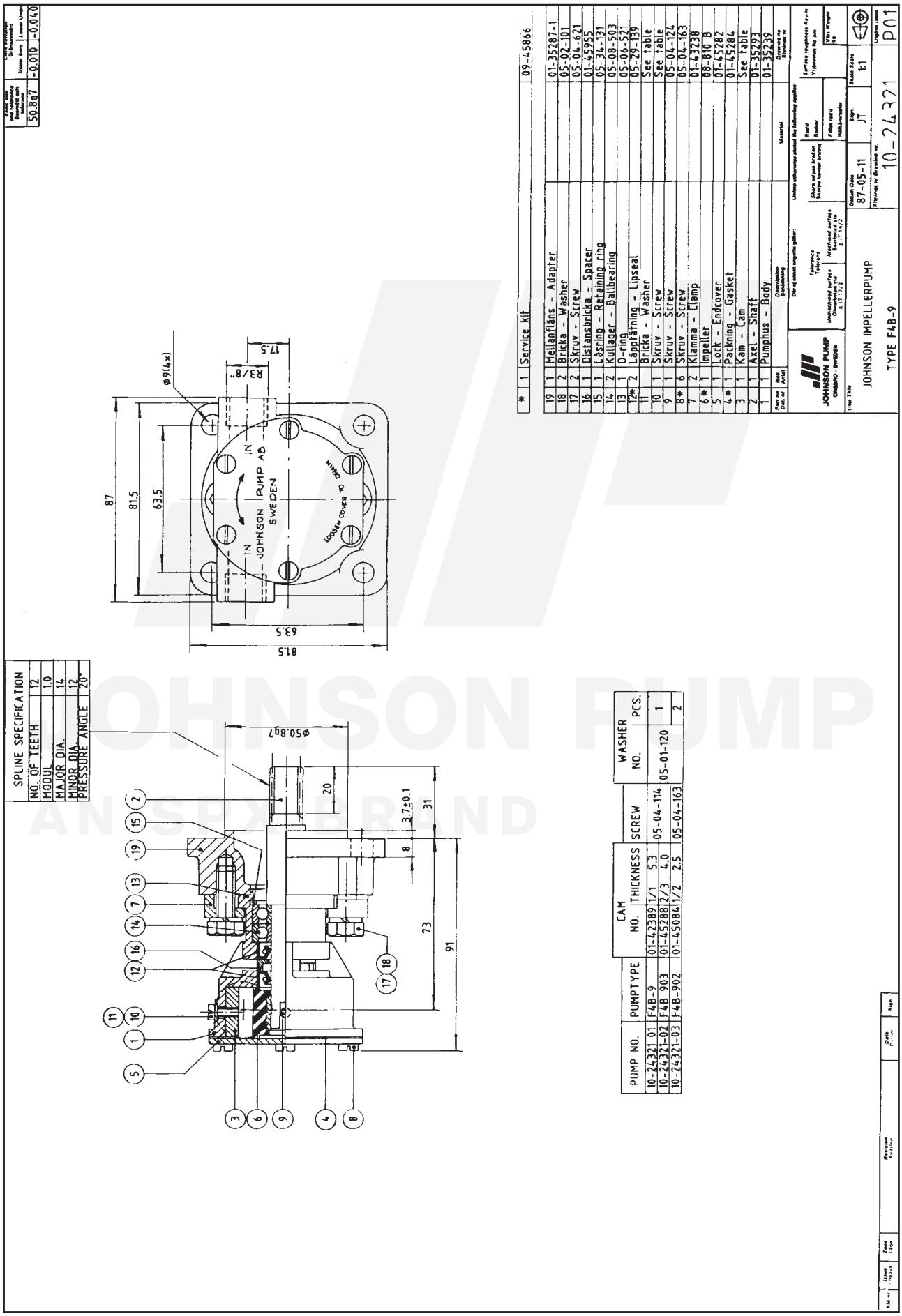

JOHNSON PUMP
AN SPX BRAND

The product, i.e. concept, design and construction, is the property of SPX Johnson Pump Marine AB

10-24326 pump F4B-9

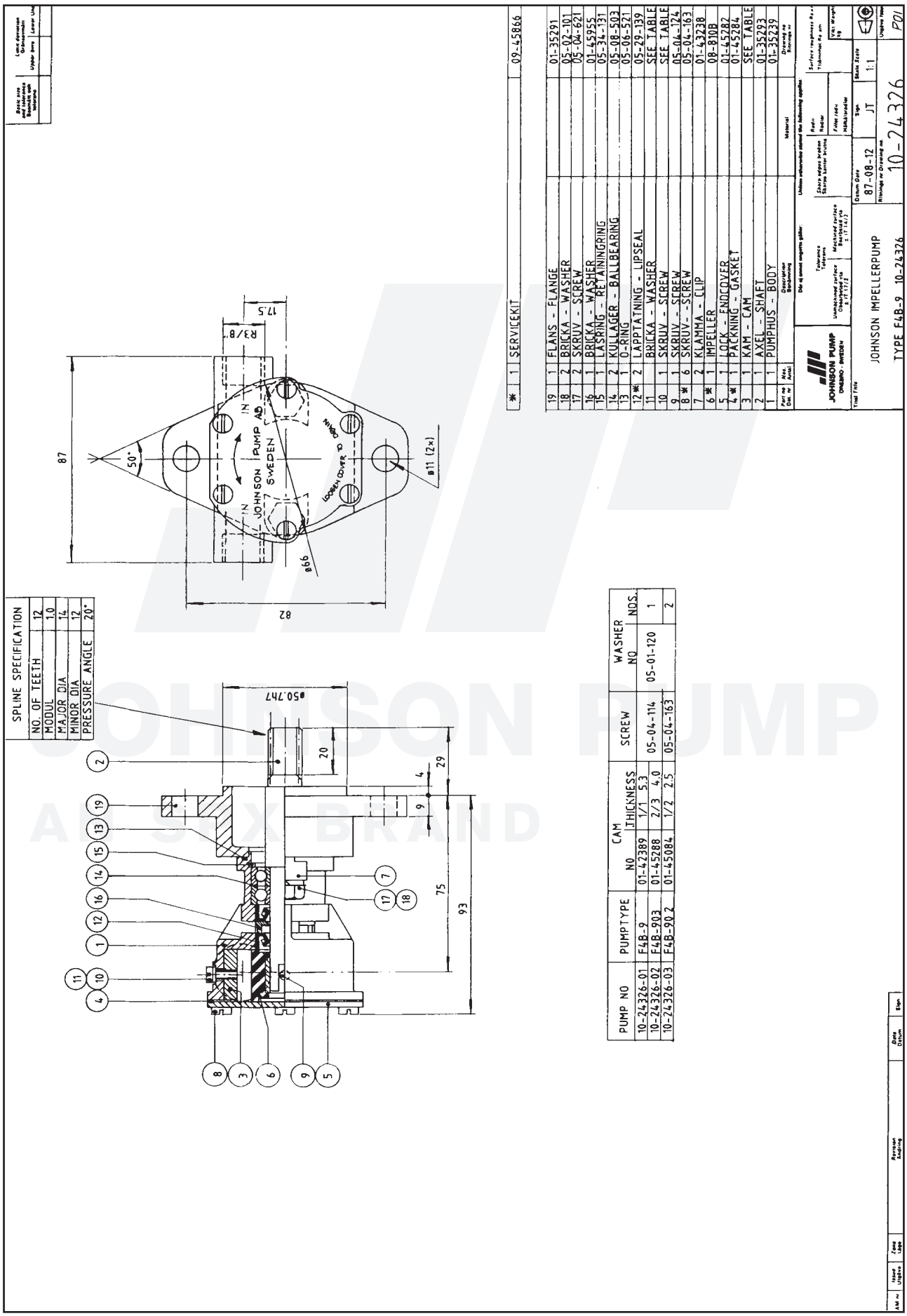

PUMP NO	PUMPTYPE	CAM NO	CAM THICKNESS	SCREW	WASHER NO	NOS.
10-24326-01	F4B-9	01-42389	1/1 5.3	05-04-114	05-01-120	1
10-24326-02	F4B-903	01-45288	2/3 4.0	05-04-163		2
10-24326-03	F4B-902	01-45084	1/2 2.5			

Pos	Antal	Benämning
*	1	SERVICEKIT
19	1	FLANS - FLANGE
18	2	BRICKA - WASHER
17	2	SKRUV - SCREW
16	1	BRICKA - WASHER
15	1	LÅSRING - RETAINING RING
14	2	KULLAGER - BALLBEARING
13	1	O-RING
12 *	2	LÄPPTÄTNING - LIPSEAL
11		BRICKA - WASHER
10	1	SKRUV - SCREW
9	1	SKRUV - SCREW
8 *	6	SKRUV - SCREW
7	2	KLAMMA - CLIP
6 *	1	IMPELLER
5	1	LOCK - ENDCOVER
4 *	1	PACKNING - GASKET
3	1	KAM - CAM
2	1	AXEL - SHAFT
1	1	PUMPHUS - BODY
Pos	Antal	Benämning

Part no	Ant. Antal	Description Benämning	Material
09-45866			

JOHNSON PUMP
ORSBRO - SWEDEN

Die ej omset angivna gäller:
Tolerance Tolerans
Unmachined surface Obearbetade yta Ra 25 (125)
Machined surface Bearbetade yta Ra 1.6 (1.6)
Surface roughness Ra µm Ytjämnhet Ra µm
Radii Radier
Fillet radii Hörnradier
Skarp kröjning brytes Skarpa kanter krälas
Datum Date 87-08-12
Sign JT
Skala Scale 1:1
Vikt Weight kg
Ritningar nr Drawing no 10-24326
Trial Title
JOHNSON IMPELLERPUMP
TYPE F4B-9 10-24326

JOHNSON PUMP
A SPX BRAND

10-24335 pump F4B-9

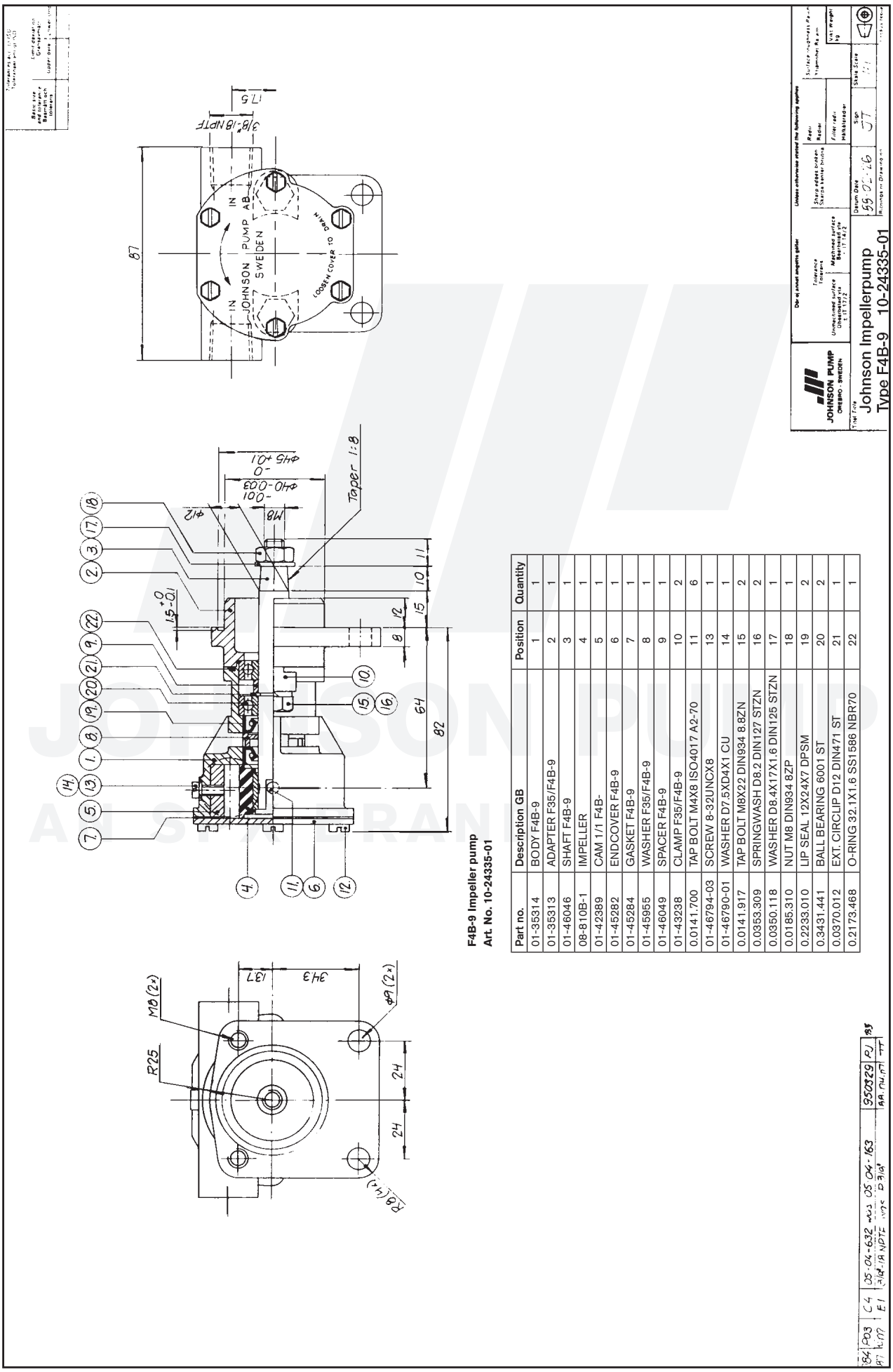

F4B-9 Impeller pump
Art. No. 10-24335-01

Part no.	Description GB	Position	Quantity
01-35314	BODY F4B-9	1	1
01-35313	ADAPTER F35/F4B-9	2	1
01-46046	SHAFT F4B-9	3	1
08-810B-1	IMPELLER	4	1
01-42389	CAM 1/1 F4B-	5	1
01-45282	ENDCOVER F4B-9	6	1
01-45284	GASKET F4B-9	7	1
01-45955	WASHER F35/F4B-9	8	1
01-46049	SPACER F4B-9	9	1
01-43238	CLAMP F35/F4B-9	10	2
0.0141.700	TAP BOLT M4X8 ISO4017 A2-70	11	6
01-46794-03	SCREW 8-32UNCX8	13	1
01-46790-01	WASHER D7.5XD4X1 CU	14	1
0.0141.917	TAP BOLT M8X22 DIN934 8.8ZN	15	2
0.0353.309	SPRINGWASH D8.2 DIN127 STZN	16	2
0.0350.118	WASHER D8.4X17X1.6 DIN125 STZN	17	1
0.0185.310	NUT M8 DIN934 8ZP	18	1
0.2233.010	LIP SEAL 12X24X7 DPSM	19	2
0.3431.441	BALL BEARING 6001 ST	20	2
0.0370.012	EXT. CIRCLIP D12 DIN471 ST	21	1
0.2173.468	O-RING 32.1X1.6 SS1586 NBR70	22	1

The product, i.e. concept, design and construction, is the property of SPX Johnson Pump Marine AB

10-24336 pump F4B-9

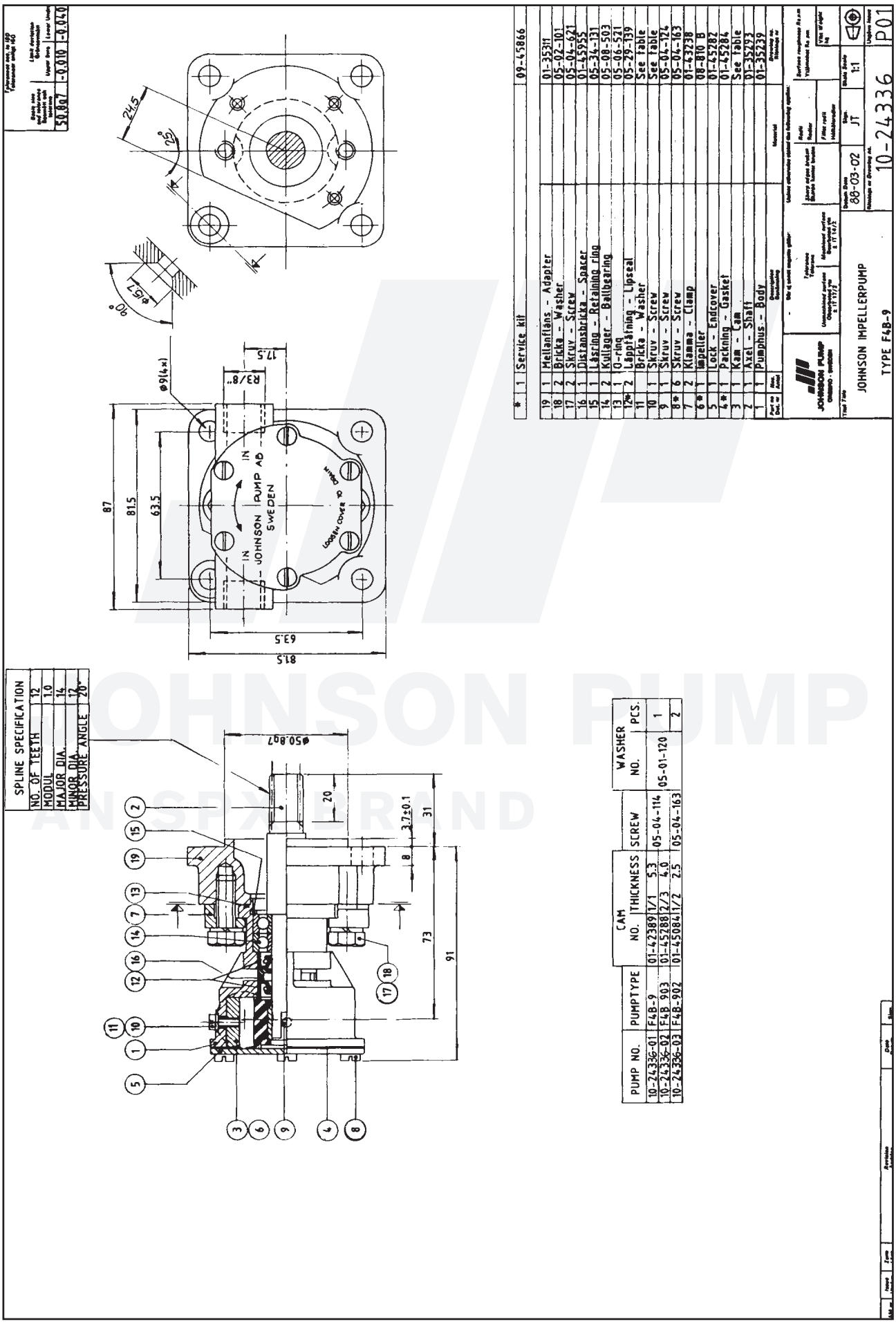

JOHNSON PUMP
AN SPX BRAND

10-24341 pump F4B-9

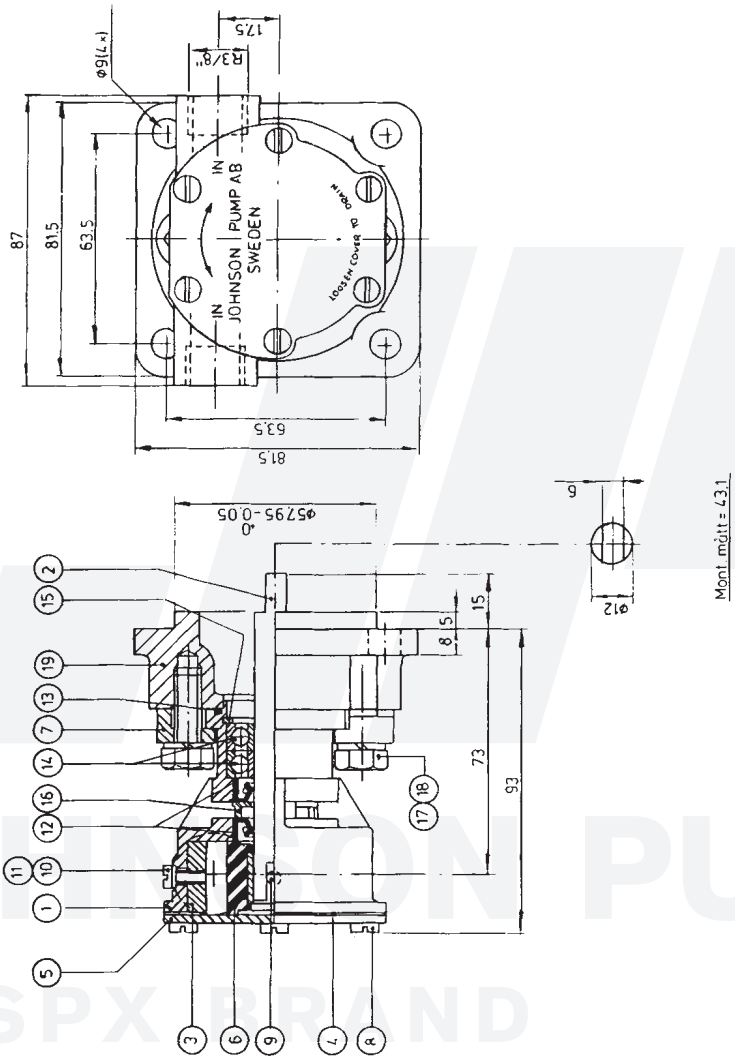

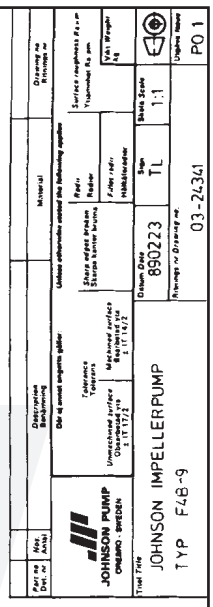

F4B-9 Impeller pump

Art. No. 10-24341-01

Part no.	Description GB	Position	Quantity
01-35239	BODY F4B-9	1	1
01-45353	SHAFT F35/F4B-9	2	1
01-42389	CAM 1/1 F4B-	3	1
01-45284	GASKET F4B-9	4	1
01-45282	ENDCOVER F4B-9	5	1
08-810B-1	IMPELLER	6	1
01-43238	CLAMP F35/F4B-9	7	2
0.0279.501	SCREW M4X8 ISO 1207	8	6
01-46794-03	SCREW 8-32UNCX8	10	1
01-46790-01	WASHER D7.5XD4X1 CU	11	1
0.2233.010	LIP SEAL 12X24X7 DPSM	12	2
0.2173.468	O-RING 32.1X1.6 SS1586 NBR70	13	1
0.3431.441	BALL BEARING 6001 ST	14	2
0.0371.028	RETAIN. RING BORE D28 DIN472 SPRST	15	1
01-45955	WASHER F35/F4B-9	16	1
0.0141.917	TAP BOLT M8X22 DIN934 8.8ZN	17	2
0.0353.309	SPRINGWASH D8.2 DIN127 STZN	18	2
01-35287-2	MIDDLE FLANGE F35/F4/F5B-9	19	1

JOHNSON PUMP
AN SPX BRAND

The product, i.e. concept, design and construction, is the property of SPX Johnson Pump Marine AB

JOHNSON PUMP
AN SPX BRAND

F4B-903 Impeller pump
Art. No. 10-24463-01

Part. No	Description GB	Position	Quantity
01-24482-1	BODY F4B-9 (ISM)	1	1
01-46492	SHAFT F4B-9	2	1
01-46496	SPACER	3	1
01-45288	CAM 2/3 F4B-803/-903	4	1
01-45600	ENDCOVER F4B-9	5	1
01-45284	GASKET F4B-9	6	1
01-45955	WASHER F35/F4B-9	7	1
01-46790-01	WASHER D7.5XD4X1 CU	8	1
01-46794-03	SCREW 8-32UNCX8	9	1
0.0279.300	SCREW M4X8 ISO1207 A4	11	6
0.2173.401	O-RING 11.1X1.6 SS1586 NBR70	12	1
0.3431.441	BALL BEARING 6001 ST	13	2
0.2233.010	LIP SEAL 12X24X7 DPSM	14	2
0.0371.028	RETAIN. RING BORE D28 DIN472 SPRST	15	1
0.0370.012	EXT. CIRCLIP D12 DIN471 ST	16	1
08-1026B-11	IMPELLER VP3586502	17	1

The product, i.e. concept, design and construction, is the property of SPX Johnson Pump Marine AB

10-24463 pump F4B-9

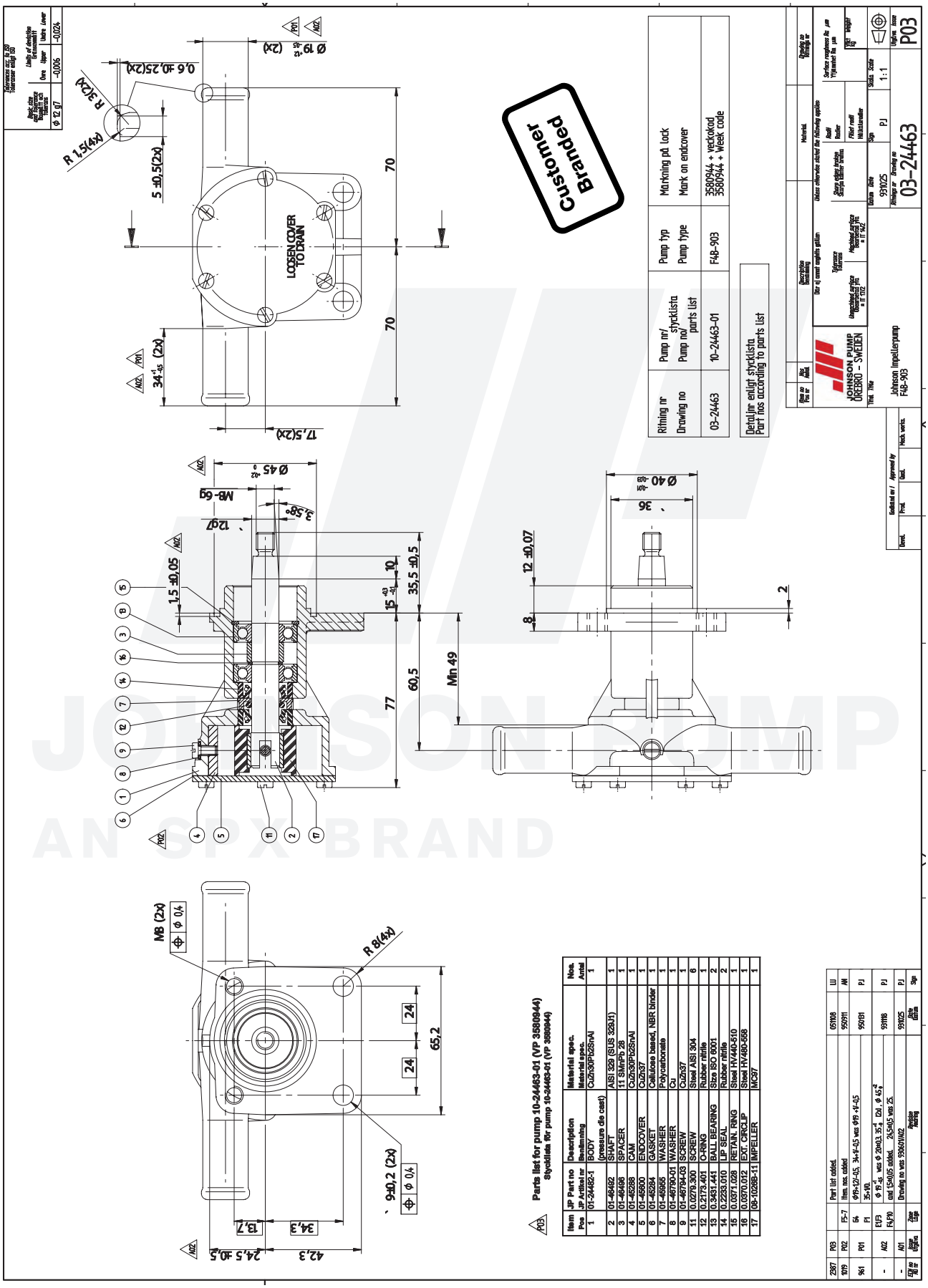

JOHNSON PUMP
AN SPX BRAND

F4B-9 **Impeller pump**
Art. No. **10-24465-01**

Part No.	Description GB	Position	Quantity
01-24483-1	BODY F4B-9 (ISM)	1	1
01-46491	SHAFT F4B-9	2	1
01-46496	SPACER	3	1
01-42389	CAM 1/1 F4B-	4	1
01-45600	ENDCOVER F4B-9	5	1
01-45284	GASKET F4B-9	6	1
01-45955	WASHER F35/F4B-9	7	1
01-46790-01	WASHER D7.5XD4X1 CU	8	1
01-46794-03	SCREW 8-32UNCX8	9	1
0.0279.300	SCREW M4X8 ISO1207 A4	11	6
0.2173.401	O-RING 11.1X1.6 SS1586 NBR70	12	1
0.3431.441	BALL BEARING 6001 ST	13	2
0.2233.010	LIP SEAL 12X24X7 DPSM	14	2
0.0371.028	RETAIN. RING BORE D28 DIN472 SPRST	15	1
0.0370.012	EXT. CIRCLIP D12 DIN471 ST	16	1
08-1026B-11	IMPELLER VP3586502	17	1

The product, i.e. concept, design and construction, is the property of SPX Johnson Pump Marine AB

10-24465 pump F4B-9

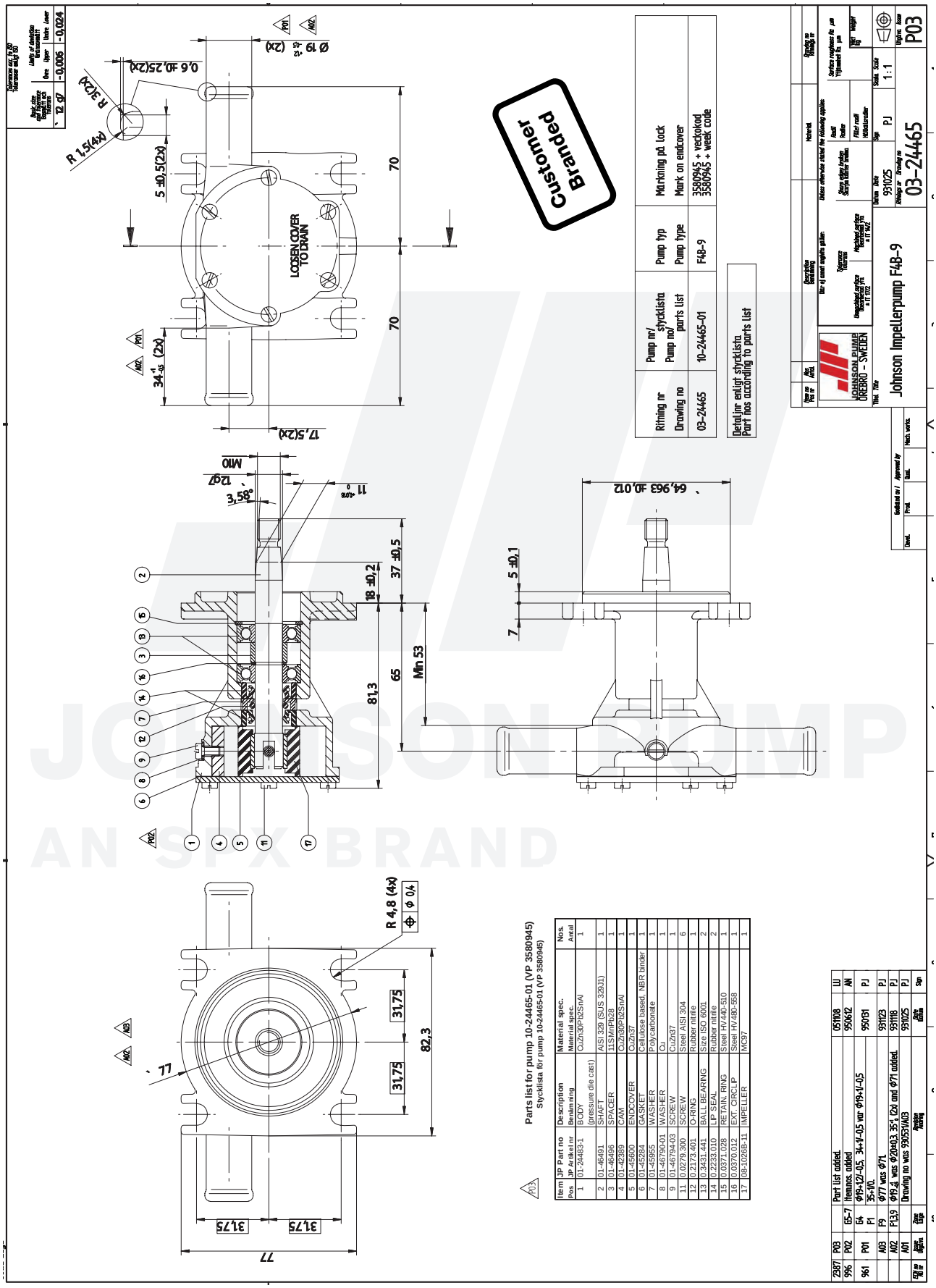

JOHNSON PUMP AN SPX BRAND

F4B-903 Impeller pump
Art. No. 10-24509-01

Service Kit No. 09-45587

Part no.	Description GB	Position	Quantity
01-24511-1	BODY F4B-903	1	1
01-42398	ENDCOVER F4/F5B-	2	1
01-45050	PLATE F35/F4B-8	3	1
19-12837742150	BRACKET	4	1
01-46541	SHAFT F4B-9	5	1
19-12407042400	V-PULLEY	6	1
01-46542	SPACER F4B-9	7	1
01-46789-01	WASHER D10.5XD22X3 STZN	8	2
0.0353.309	SPRINGWASH D8.2 DIN127 STZN	9	2
0.0141.916	TAP BOLT M8X20 DIN933 8.8ZN	10	2
0.0141.700	TAP BOLT M4X8 ISO4017 A2-70	11	6
0.0190.050	LOCKNUT M8 ISO7043 8.8ZN	12	1
0.0183.200	NUT M12 LEFT ISO4035 8.8ZN	13	1
0.2173.432	O-RING 11.3X2.4 SS1586 NBR70	14	1
0.2173.476	O-RING 59.6X2.4 SS1586 NBR70	15	1
0.3431.760	BALL BEARING 6201-2RS1	16	1
0.3431.748	BALL BEARING 6001 2 RS1 ST	17	1
0.2233.010	LIP SEAL 12X24X7 DPSM	18	1
0.0370.012	EXT. CIRCLIP D12 DIN471 ST	19	1
0.0371.732	INT. CIRCLIP D32 DIN472 STZN	20	1
08-810B-1	IMPELLER	22	1

JOHNSON PUMP
AN SPX BRAND

F4B-902 Impeller pump
Art. No. 10-24509-02

Service Kit No. 09-45587

Part. No.	Description GB	Position	Quantity
01-24511-2	BODY F4B-902	1	1
01-42398	ENDCOVER F4/F5B-	2	1
01-45050	PLATE F35/F4B-8	3	1
19-12837742150	BRACKET	4	1
01-46541	SHAFT F4B-9	5	1
19-12407042400	V-PULLEY	6	1
01-46542	SPACER F4B-9	7	1
01-46789-01	WASHER D10.5XD22X3 STZN	8	2
0.0353.309	SPRINGWASH D8.2 DIN127 STZN	9	2
0.0141.916	TAP BOLT M8X20 DIN933 8.8ZN	10	2
0.0141.700	TAP BOLT M4X8 ISO4017 A2-70	11	6
0.0190.050	LOCKNUT M8 ISO7043 8.8ZN	12	1
0.0183.200	NUT M12 LEFT ISO4035 8.8ZN	13	1
0.2173.432	O-RING 11.3X2.4 SS1586 NBR70	14	1
0.2173.476	O-RING 59.6X2.4 SS1586 NBR70	15	1
0.3431.760	BALL BEARING 6201-2RS1	16	1
0.3431.748	BALL BEARING 6001 2 RS1 ST	17	1
0.2233.010	LIP SEAL 12X24X7 DPSM	18	1
0.0370.012	EXT. CIRCLIP D12 DIN471 ST	19	1
0.0371.732	INT. CIRCLIP D32 DIN472 STZN	20	1
08-810B-1	IMPELLER	22	1

The product, i.e. concept, design and construction, is the property of SPX Johnson Pump Marine AB

10-24509 pump F4B-9

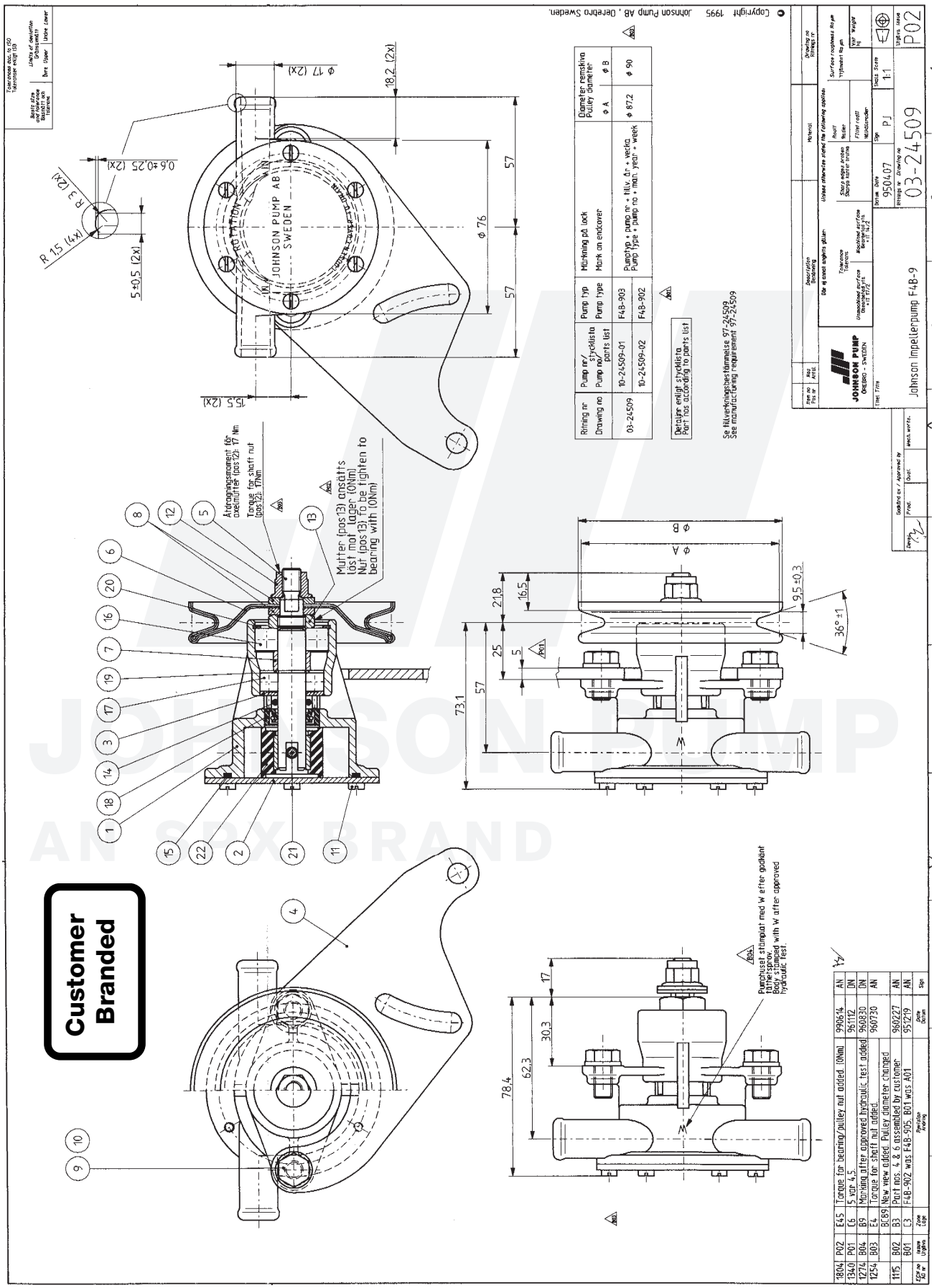

JOHNSON PUMP
AN SPX BRAND

F4B-9 Impeller pump
Art. No. 10-24514-01

Part no.	Description GB	Position	Quantity
01-35239	BODY F4B-9	1	1
01-46563	SHAFT F4B-9	2	1
01-42389	CAM 1/1 F4B-	3	1
01-45284	GASKET F4B-9	4	1
01-45282	ENDCOVER F4B-9	5	1
08-810B-1	IMPELLER	6	1
01-43238	CLAMP F35/F4B-9	7	2
0.0279.501	SCREW M4X8 ISO1207	8	6
01-46794-03	SCREW 8-32UNCX8	10	1
01-46790-01	WASHER D7.5XD4X1 CU	11	1
0.2233.010	LIP SEAL 12X24X7 DPSM	12	2
0.2173.468	O-RING 32.1X1.6 SS1586 NBR70	13	1
0.3431.441	BALL BEARING 6001 ST	14	2
0.0371.028	RETAIN. RING BORE D28 DIN472 SPRST	15	1
01-45955	WASHER F35/F4B-9	16	1
0.0141.917	TAP BOLT M8X22 DIN934 8.8ZN	17	2
0.0353.309	SPRINGWASH D8.2 DIN127 STZN	18	2
01-35291-2	FLANGE F35/F4/F5B-9	19	1

The product, i.e. concept, design and construction, is the property of SPX Johnson Pump Marine AB

10-24514 pump F4B-9

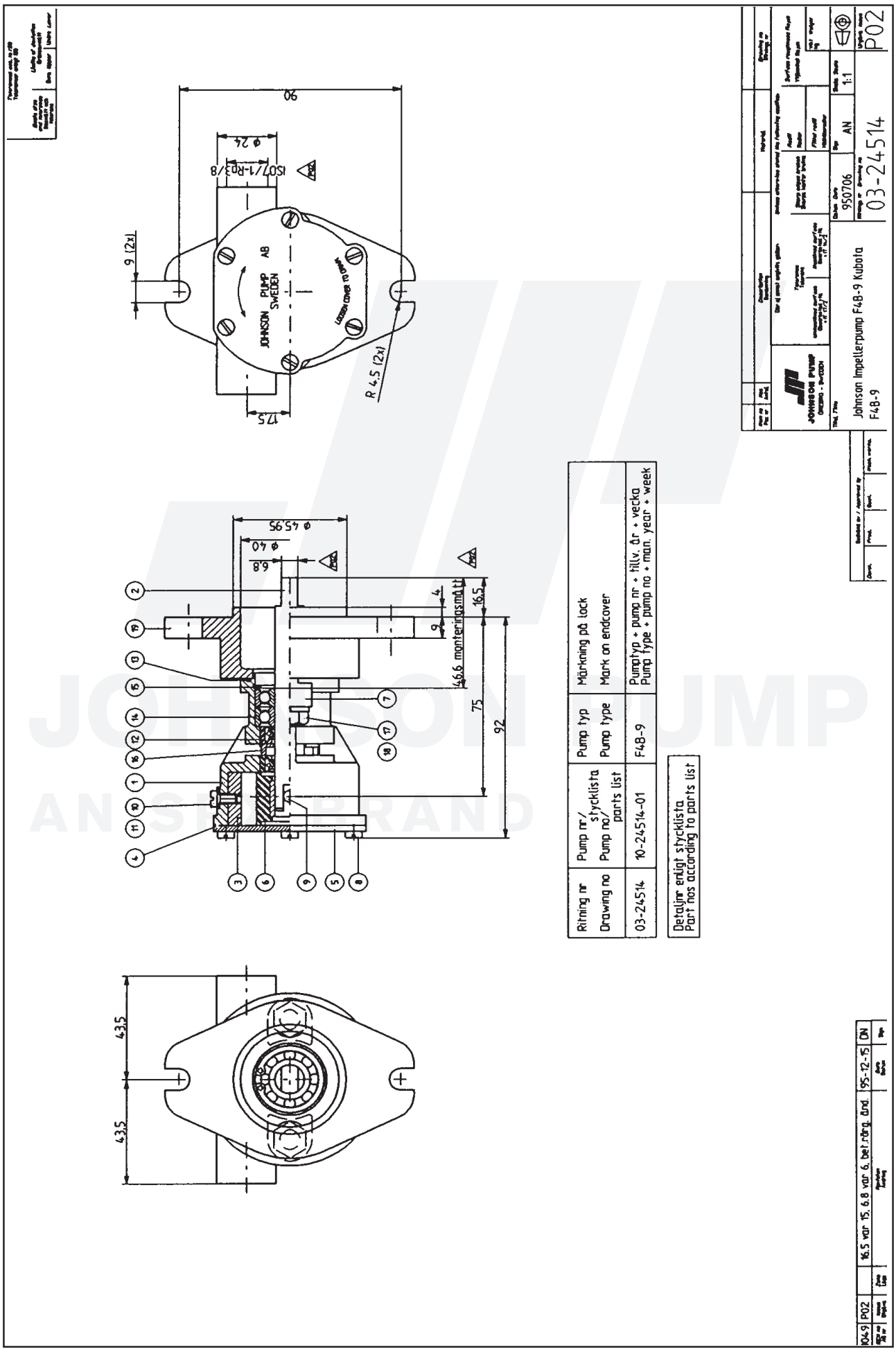

F4B-9 Impeller pump
Art. No. 10-24629-01

Part. No.	Description GB	Position	Quantity
01-24616-1	BODY CASTING F4B-9 (BETA MARIN)	1	1
01-46916	AXEL F4B-9	2	1
01-46007-2	ENDCOVER F4/F5B NEUTRAL	3	1
08-810B-1	IMPELLER	4	1
01-42389	CAM 1/1 F4B-	5	1
01-45542	SPACER D 12X16X4,3	6	1
01-42400	PIN F35B-/F7B/F70B	7	1
01-46737-2	WEAR PLATE F4B	8	1
01-45659	WASHER F4B-8/-9	9	1
01-46790-01	WASHER D7.5XD4X1 CU	10	1
0.0279.300	SCREW M4X8 ISO1207 A4	12	6
01-46794-04	SCREW 8-32UNCX10	13	1
0.2173.476	O-RING 54.6X2.4 NBR70	14	1
0.2230.012	V-RING V-12S NBR70	15	1
0.3431.748	BALL BEARING 6001 2 RS1 ST	16	2
0.2247.021	MECH.SEAL COMPL D12	17	1
0.0371.028	RETAIN. RING BORE D28 DIN472 SPRST	18	1
0.0370.012	EXT. CIRCLIP D12 DIN471 ST	19	1
0.2234.503	LIP SEAL 12x28x7 DIN 3760 A FPM	20	1
0.0633.704	PLUG TYPE410038 D20.7MM DBI	0	2
01-43238	CLAMP F35/F4B-9	22	2
01-46797	LABEL	23	1
01-47055-1	PAINT PROTECTION ø 41	24	1
0.0370.512	EXT. CIRCLIP D12 DIN471 FB	25	1

JOHNSON PUMP ANSEKRAN

The product, i.e. concept, design and construction, is the property of SPX Johnson Pump Marine AB

10-24629 pump F4B-9

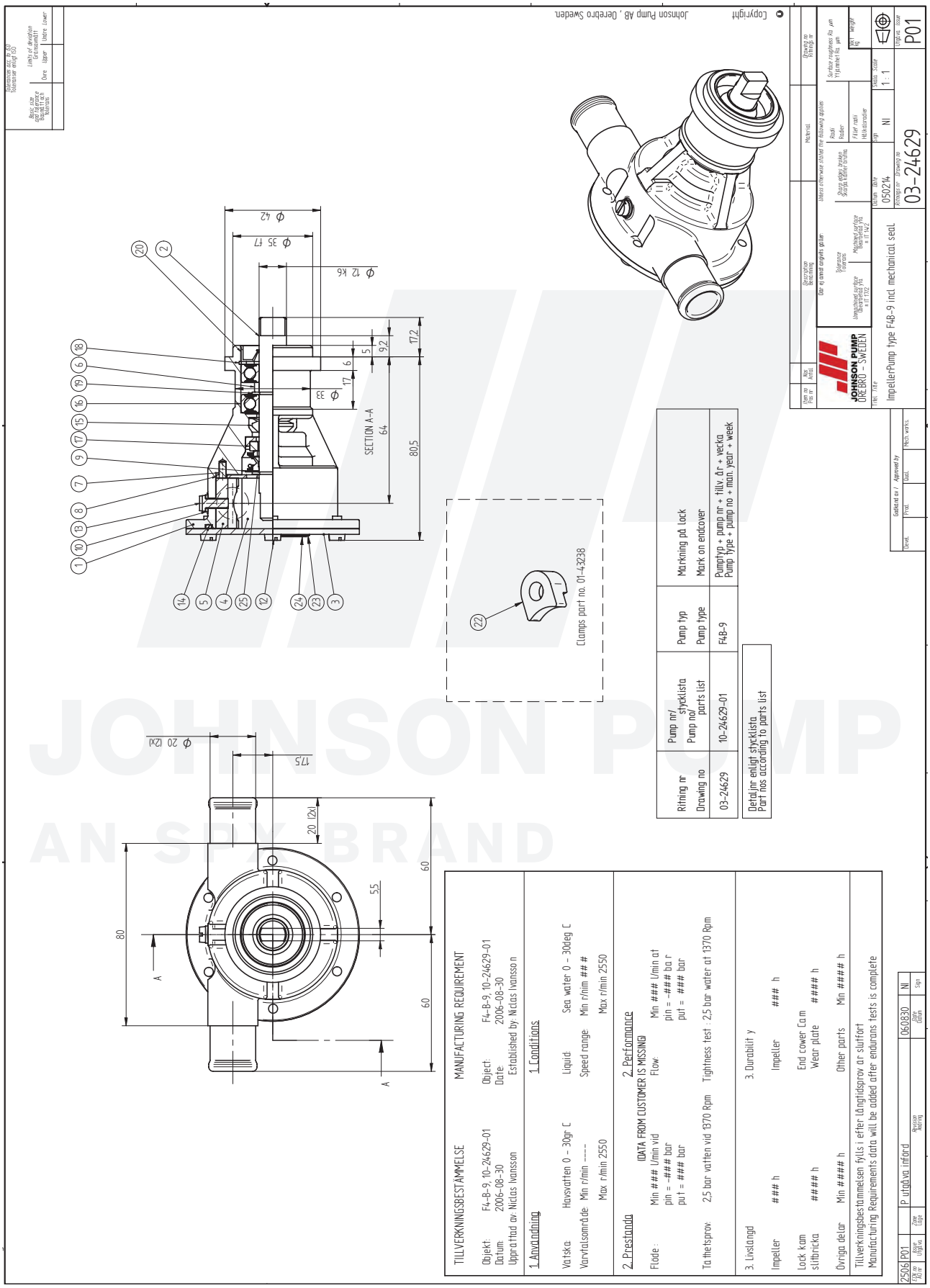

JOHNSON PUMP
AN SPX BRAND

F4B-9 Impeller pump
Art. No. 10-24734-01

Part. No.	Description GB	Position	Quantity
01-24733-1	PUMP BODY F4B-9 1/1 kam	1	1
01-36127	SHAFT F4B-9	2	1
01-46007-2	ENDCOVER F4/F5B NEUTRAL	3	1
08-810B-1	IMPELLER	4	1
01-45542	SPACER D 12X16X4,3	5	1
0.0141.700	TAP BOLT M4X8 ISO4017 A2-70	6	6
0.2173.476	O-RING 54.6X2.4 NBR70	7	1
0.2173.432	O-RING 11.3X2.4 SS1586 NBR70	8	1
0.3431.748	BALL BEARING 6001 2 RS1 ST	9	2
0.0371.028	RETAIN. RING BORE D28 DIN472 SPRST	10	1
0.0370.012	EXT. CIRCLIP D12 DIN471 ST	11	1
0.2234.506	LIP SEAL 14x28x7 NITRILE	12	1
0.2233.010	LIP SEAL 12X24X7 DPSM	13	1
0.0633.703	PLUG TYPE 410036 D18.5MM DBI	0	2

The product, i.e. concept, design and construction, is the property of SPX Johnson Pump Marine AB

10-24734 pump F4B-9

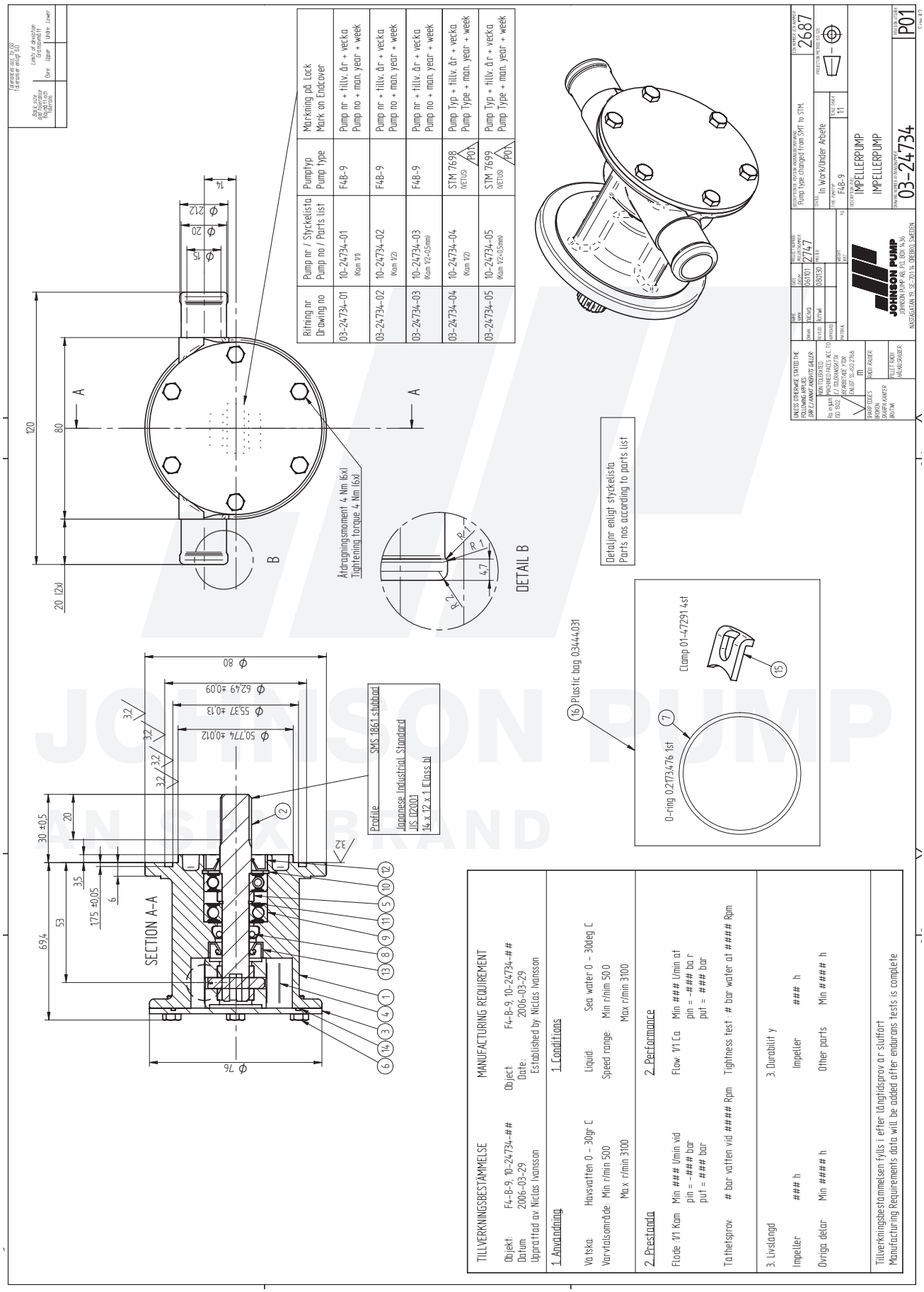

JOHNSON PUMP
AN SPX BRAND

F4B-9 Impeller pump
Art. No. 10-24749-01

Part. No.	Description GB	Position	Quantity
01-24613-1	BODY F4B-9	1	1
01-36133	SHAFT F4B-9 ZENITH	2	1
01-46007-2	ENDCOVER F4/F5B NEUTRAL	3	1
08-810B-1	IMPELLER	4	1
01-45084	CAM 1/2 F4B-	5	1
01-45542	SPACER D 12X16X4,3	6	1
01-42400	PIN F35B-/F7B/F70B	7	1
01-46737-2	WEAR PLATE F4B	8	1
01-45659	WASHER F4B-8/-9	9	1
01-46790-01	WASHER D7.5XD4X1 CU	10	1
01-46794-10	SCREW 8-32UNCX7	11	1
0.0279.300	SCREW M4X8 ISO1207 A4	12	6
0.0370.512	EXT. CIRCLIP D12 DIN471 FB	13	1
0.2173.476	O-RING 54.6X2.4 NBR70	14	1
0.2230.012	V-RING V-12S NBR70	15	1
0.3431.748	BALL BEARING 6001 2 RS1 ST	16	2
0.2247.021	MECH.SEAL COMPL D12	17	1
0.0371.028	RETAIN. RING BORE D28 DIN472 SPRST	18	1
0.0370.012	EXT. CIRCLIP D12 DIN471 ST	19	1
0.2234.021	OIL SEAL 15X28-7 DIN3760 NBR	20	1
01-35213-4	FLANGE F4B-9	21	1
0.0252.137	ALLEN SCREW M 6X 20-M-DIN912(A4)	22	4
01-43238	CLAMP F35/F4B-9	23	4
0.0633.701	PLUG TYPE 410025 D14MM DBI	0	1
0.0633.704	PLUG TYPE410038 D20.7MM DBI	0	2
01-46797	LABEL	0	1

The product, i.e. concept, design and construction, is the property of SPX Johnson Pump Marine AB

10-24749 pump F4B-9

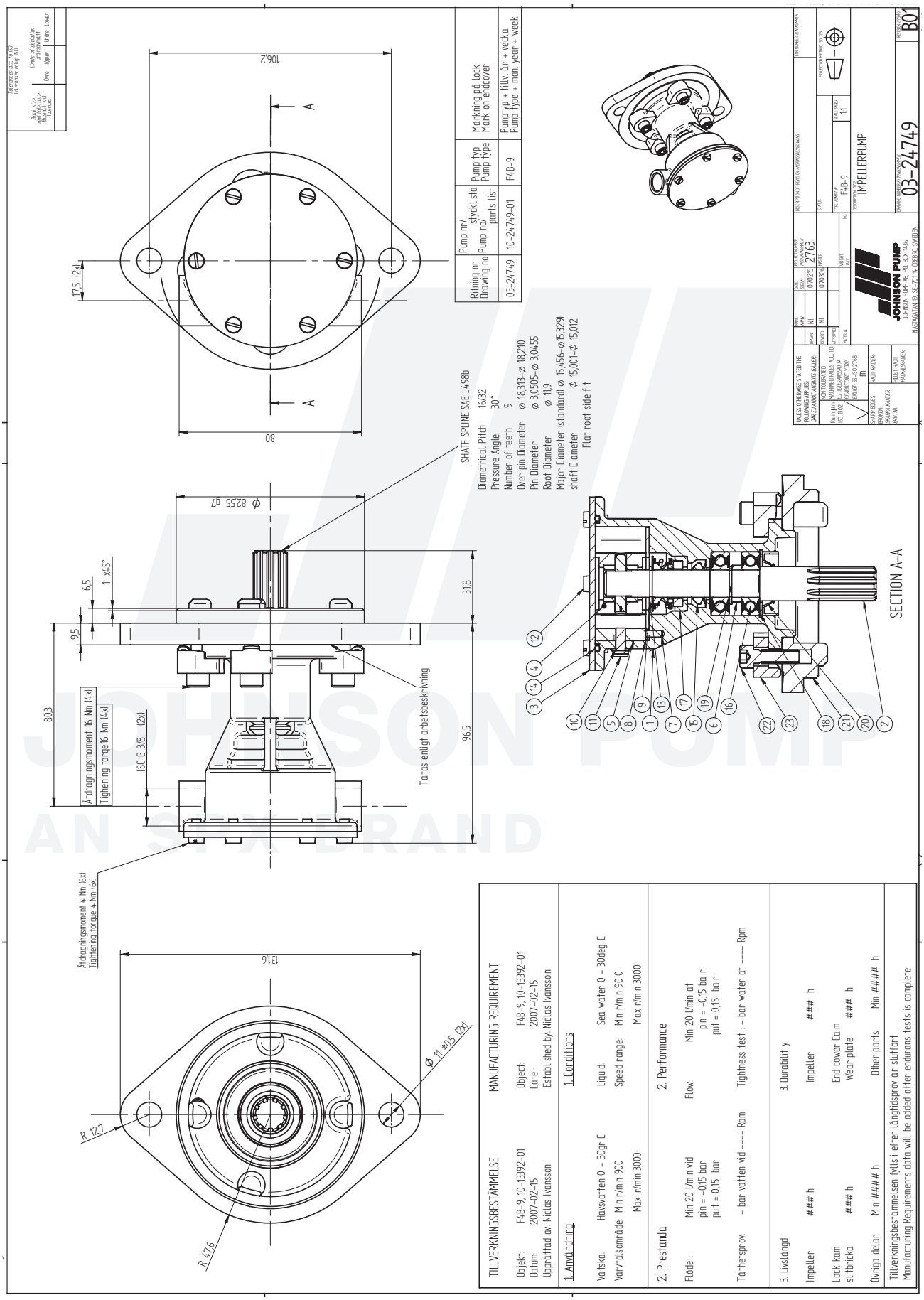

F4B-903 Impeller pump
Art. Nr 10-24751-01

Part. No.	Description GB	Position	Quantity
01-24482-1	BODY F4B-9 (ISM)	1	1
01-46492	SHAFT F4B-9	2	1
01-46496	SPACER	3	1
01-45288	CAM 2/3 F4B-803/-903	4	1
01-45600	ENDCOVER F4B-9	5	1
01-45284	GASKET F4B-9	6	1
01-45955	WASHER F35/F4B-9	7	1
01-46790-01	WASHER D7.5XD4X1 CU	8	1
01-46794-03	SCREW 8-32UNCX8	9	1
0.0279.300	SCREW M4X8 ISO1207 A4	11	6
0.2173.401	O-RING 11.1X1.6 SS1586 NBR70	12	1
0.3431.441	BALL BEARING 6001 ST	13	2
0.2233.010	LIP SEAL 12X24X7 DPSM	14	2
0.0371.028	RETAIN. RING BORE D28 DIN472 SPRST	15	1
0.0370.012	EXT. CIRCLIP D12 DIN471 ST	16	1
08-1026B-01	IMPELLER VP3593658	17	1

The product, i.e. concept, design and construction, is the property of SPX Johnson Pump Marine AB

10-24751 pump F4B-9

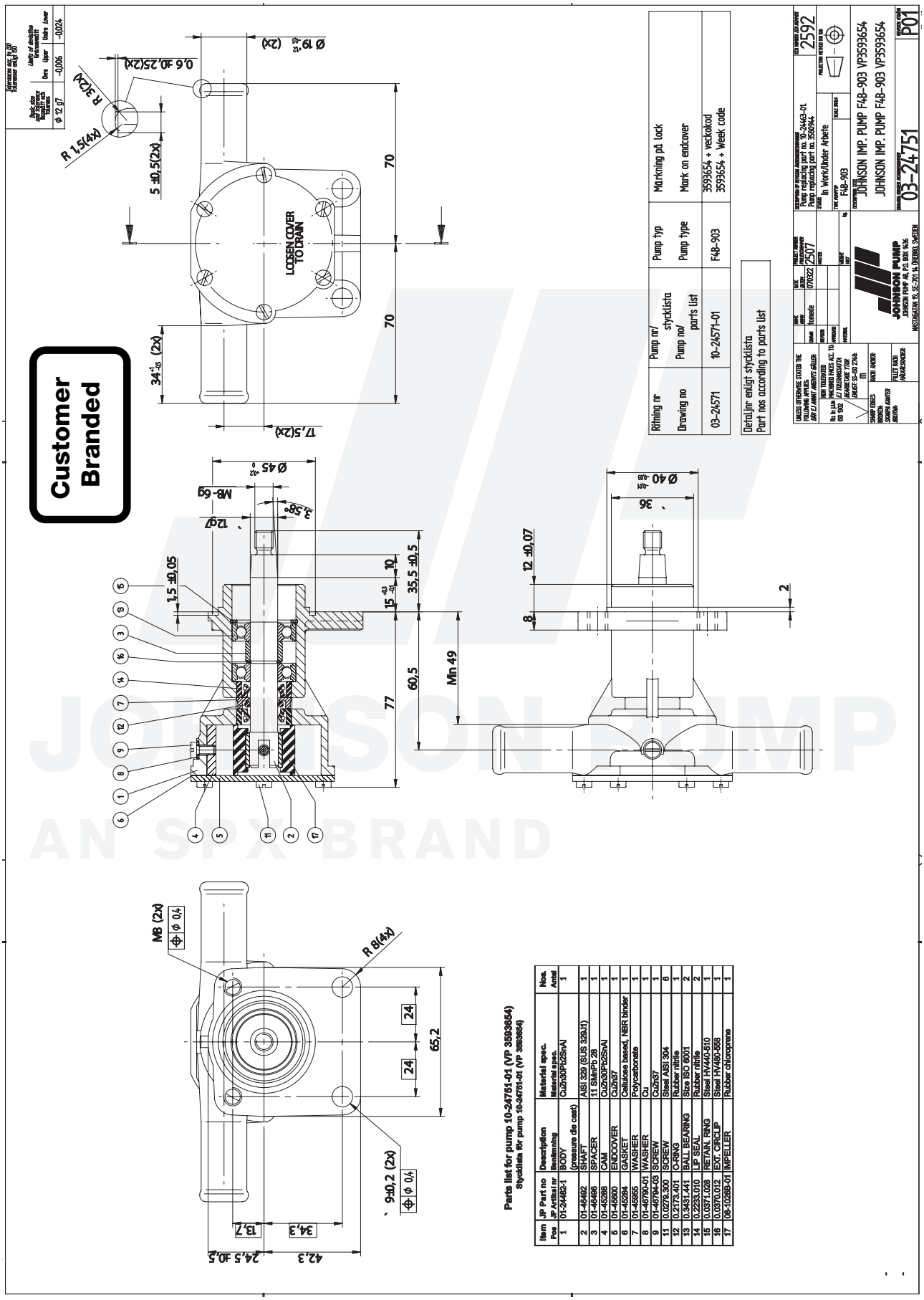

Parts list for pump 10-24751-01 (VP 3593654)
Stycklista för pump 10-24751-01 (VP 3593654)

Item Pos	JP Part no JP Artikel nr	Description Benämning	Material spec. Material spec.	Nos. Antal
1	01-24462-1	BODY (pressure die cast)	CuZn30Pb2Sn4Al	1
2	01-49492	SHAFT	AISI 329 (SUS 329J1)	1
3	01-49496	SPACER	11 SMnPb 28	1
4	01-45288	CAM	CuZn30Pb2Sn4Al	1
5	01-45600	ENDCOVER	CuZn37	1
6	01-45284	GASKET	Cellulose based, NBR binder	1
7	01-45965	WASHER	Polycarbonate	1
8	01-46790-01	WASHER	Cu	1
9	01-46794-03	SCREW	CuZn37	1
11	0.0279.300	SCREW	Steel AISI 304	6
12	0.2473.401	O-RING	Rubber nitrile	1
13	0.3491.441	BALL BEARING	Size ISO 6001	2
14	0.2253.010	LIP SEAL	Rubber nitrile	2
15	0.0871.028	RETAIN. RING	Steel HV440-510	1
16	0.0870.012	EXT. CIRCLIP	Steel HV480-558	1
17	06-10268-01	IMPELLER	Rubber chloroprene	1

JOHNSON PUMP
AN SPX BRAND

F4B-9 Impeller pump
Art. No. 10-24752-01

Part. No.	Description GB	Position	Quantity
01-24483-1	BODY F4B-9 (ISM)	1	1
01-46491	SHAFT F4B-9	2	1
01-46496	SPACER	3	1
01-42389	CAM 1/1 F4B-	4	1
01-45600	ENDCOVER F4B-9	5	1
01-45284	GASKET F4B-9	6	1
01-45955	WASHER F35/F4B-9	7	1
01-46790-01	WASHER D7.5XD4X1 CU	8	1
01-46794-03	SCREW 8-32UNCX8	9	1
0.0279.300	SCREW M4X8 ISO1207 A4	11	6
0.2173.401	O-RING 11.1X1.6 SS1586 NBR70	12	1
0.3431.441	BALL BEARING 6001 ST	13	2
0.2233.010	LIP SEAL 12X24X7 DPSM	14	2
0.0371.028	RETAIN. RING BORE D28 DIN472 SPRST	15	1
0.0370.012	EXT. CIRCLIP D12 DIN471 ST	16	1
08-1026B-01	IMPELLER VP3593658	17	1

The product, i.e. concept, design and construction, is the property of SPX Johnson Pump Marine AB

10-24752 pump F4B-9

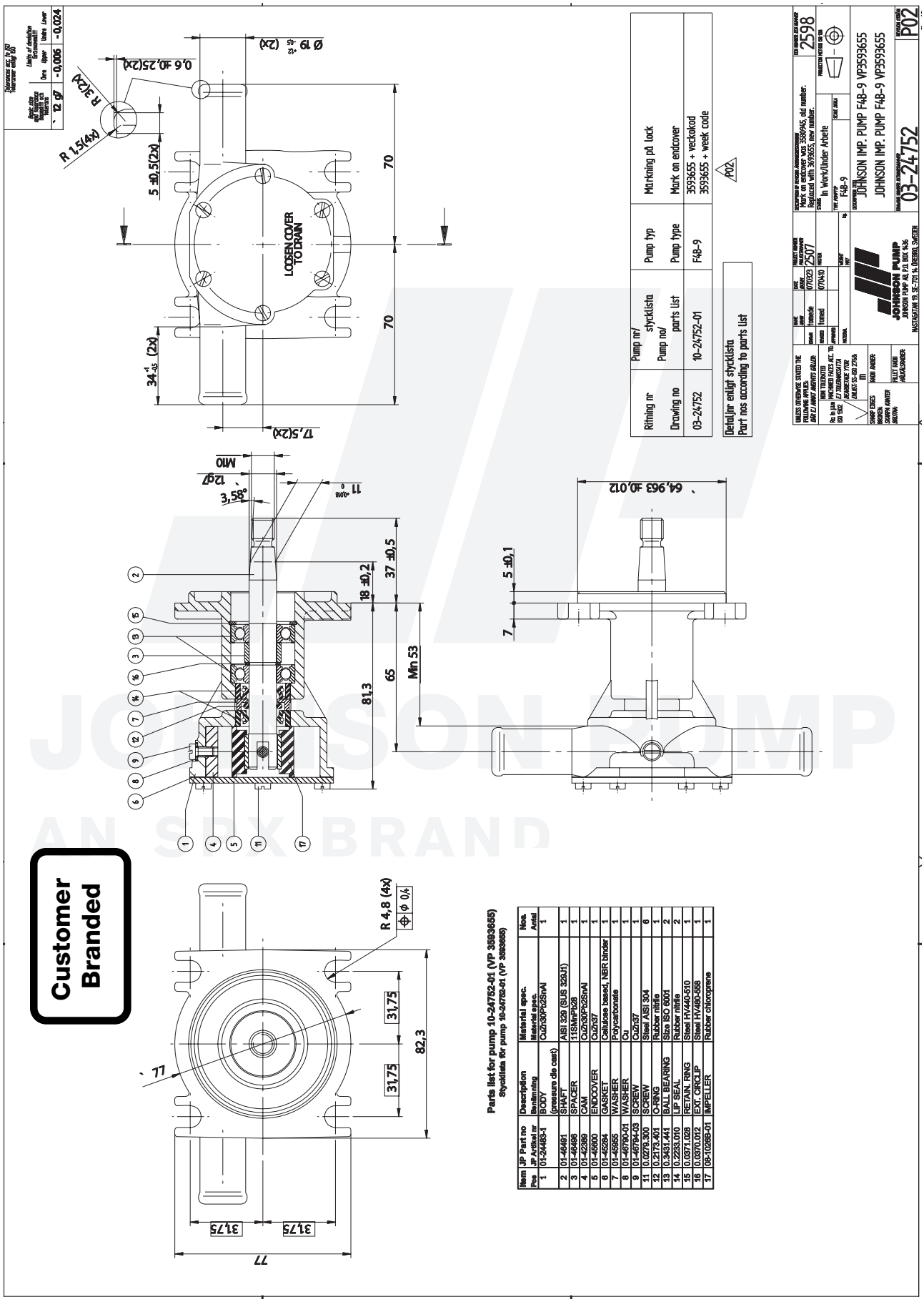

Item Pos	JP Part no JP Artikel nr	Description Benämning	Material spec. Material spec.	Nos. Antal
1	01-24483-1	BODY (pressure die cast)	CuZn30PC25nN	1
2	01-49491	SHAFT	AISI 329 (SUS 329J1)	1
3	01-49498	SPACER	11SMnPb28	1
4	01-42389	CAM	CuZn30PC25nN	1
5	01-49800	ENDCOVER	CuZn37	1
6	01-46294	GASKET	Cellulose based, NBR binder	1
7	01-46895	WASHER	Polycarbonate	1
8	01-46790-01	WASHER	Cu	1
9	01-46794-03	SCREW	CuZn37	1
11	0.0279.300	SCREW	Steel AISI 304	8
12	0.2173.401	O-RING	Rubber nitrile	1
13	0.3431.441	BALL BEARING	Size ISO 6001	2
14	0.2238.010	LIP SEAL	Rubber nitrile	2
15	0.0871.028	RETAIN. RING	Steel RV440-510	1
16	0.0870.012	EXT. CIRCLIP	Steel RV480-588	1
17	06-10268-01	IMPELLER	Rubber chloroprene	1

JOHNSON PUMP
AN SPX BRAND

10-31917 pump F4B-9

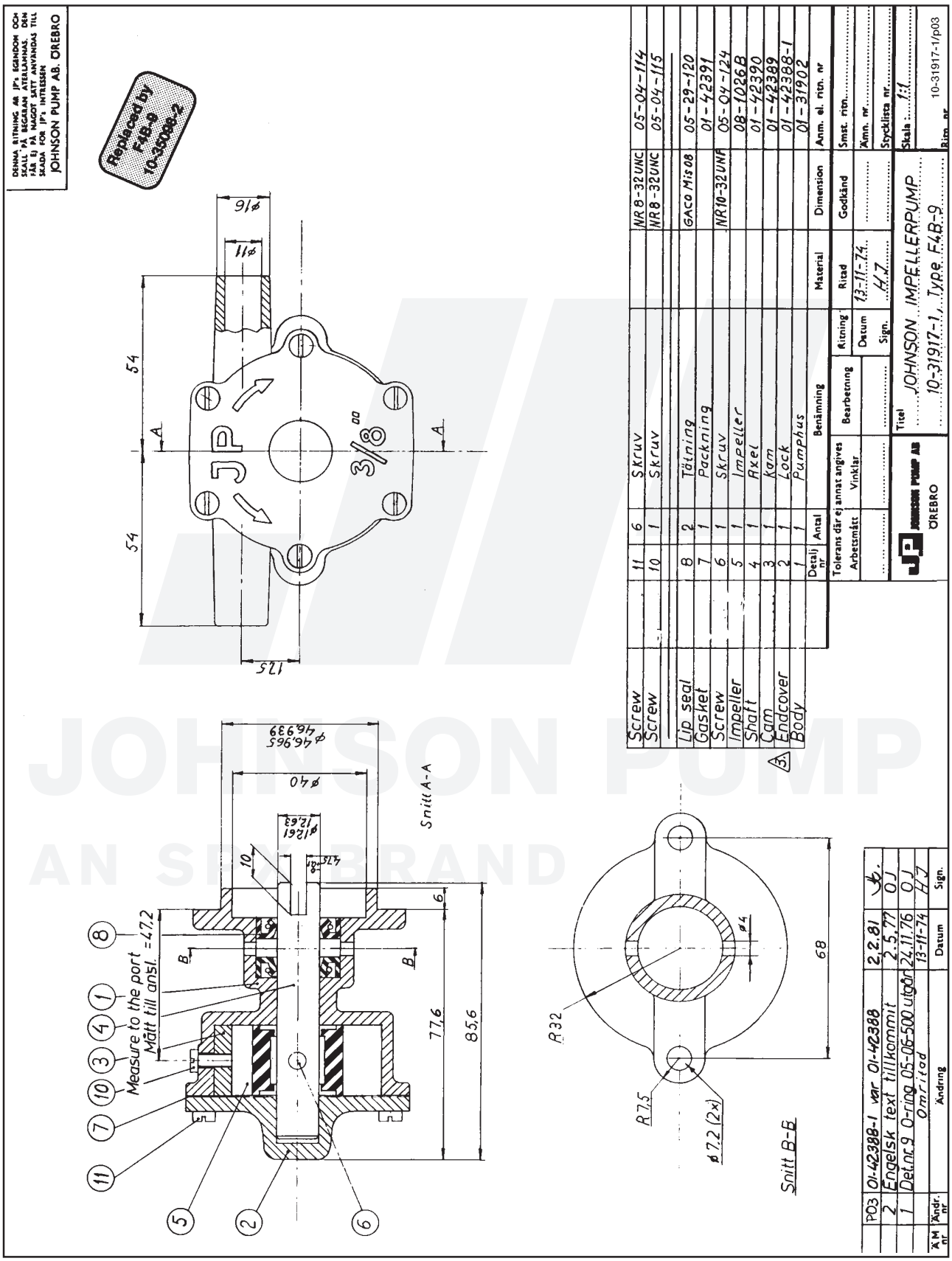

JOHNSON PUMP
AN SPX BRAND

The product, i.e. concept, design and construction, is the property of SPX Johnson Pump Marine AB

10-32588 pump F4B-9

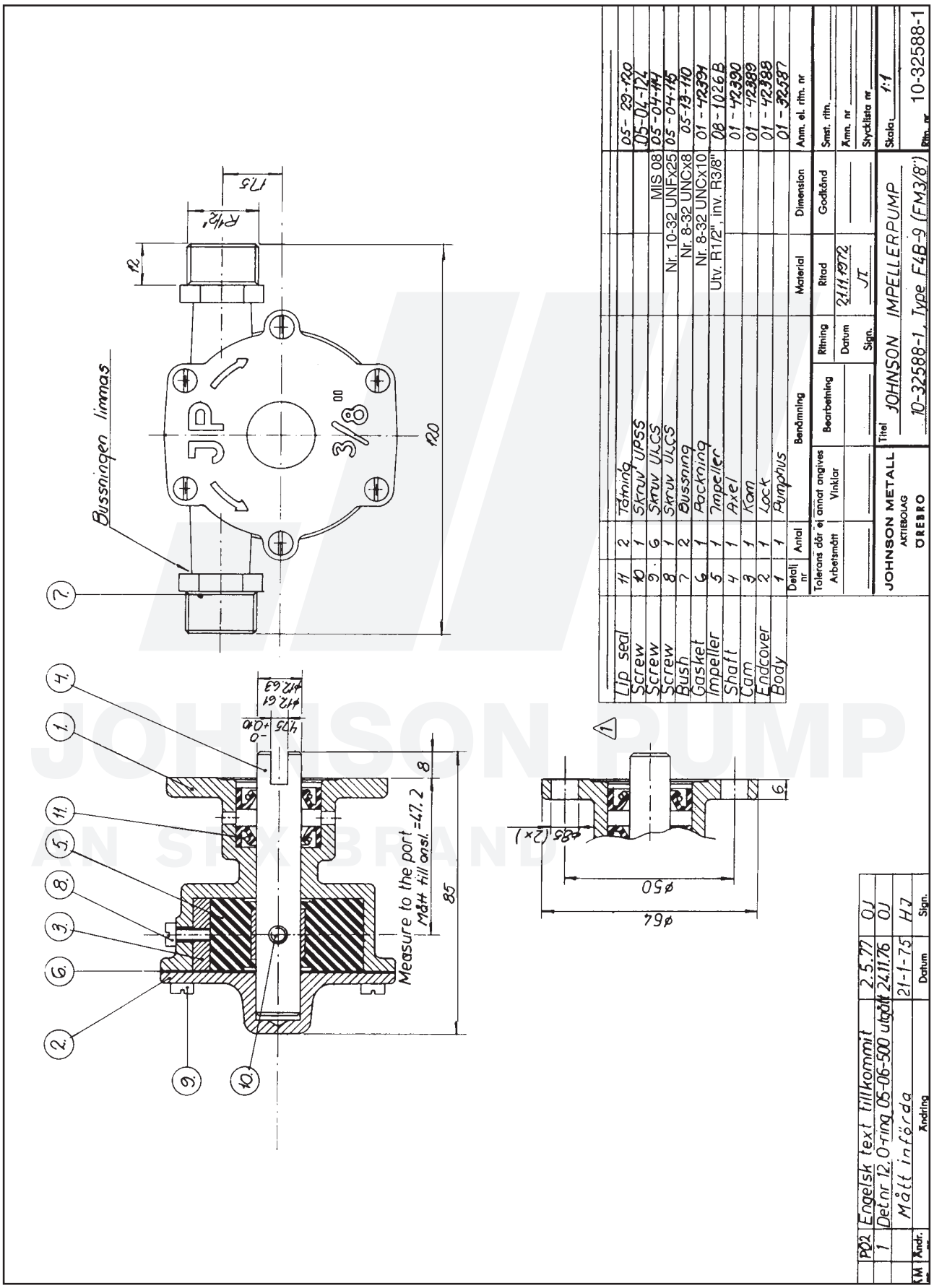

JOHNSON PUMP
AN SPX BRAND

10-35024 pump F4B-9

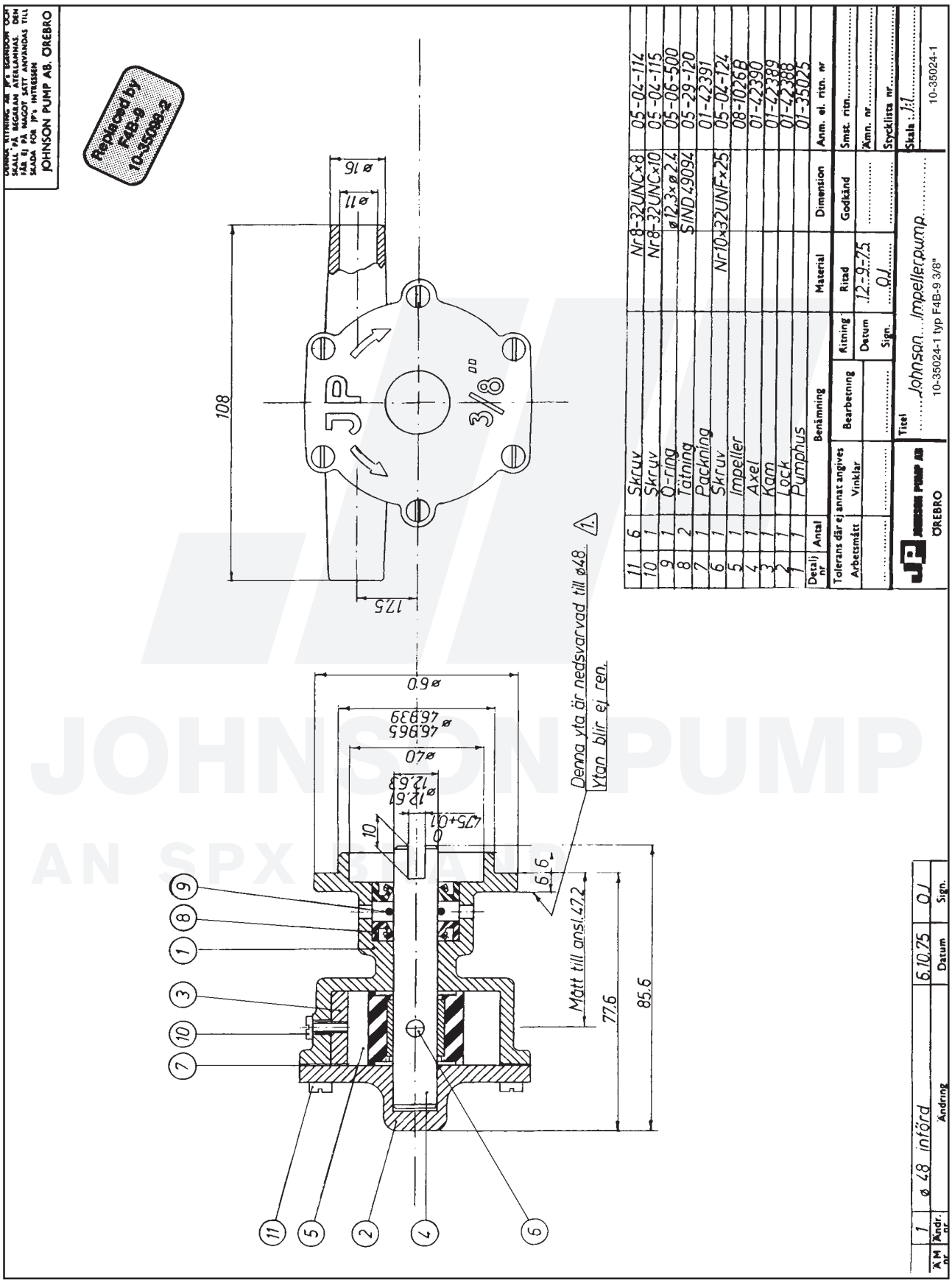

JOHNSON PUMP
AN SPX BRAND

The product, i.e. concept, design and construction, is the property of SPX Johnson Pump Marine AB

10-35058 pump F4B-9

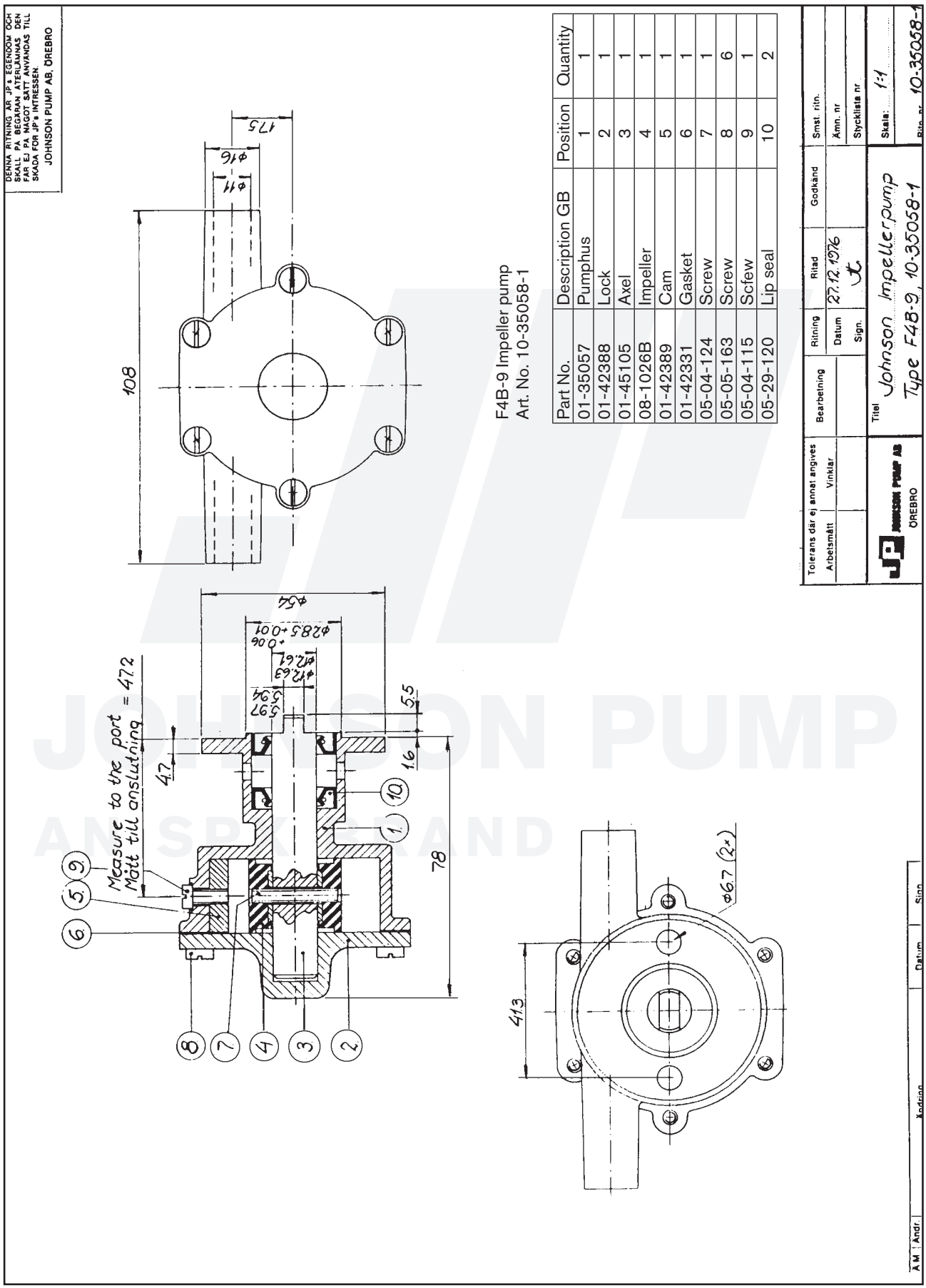

F4B-9 Impeller pump
Art. No. 10-35058-1

Part No.	Description GB	Position	Quantity
01-35057	Pumphus	1	1
01-42388	Lock	2	1
01-45105	Axel	3	1
08-1026B	Impeller	4	1
01-42389	Cam	5	1
01-42331	Gasket	6	1
05-04-124	Screw	7	1
05-05-163	Screw	8	6
05-04-115	Scfew	9	1
05-29-120	Lip seal	10	2

JOHNSON PUMP
AN SPX BRAND

10-35064 pump F4B-9

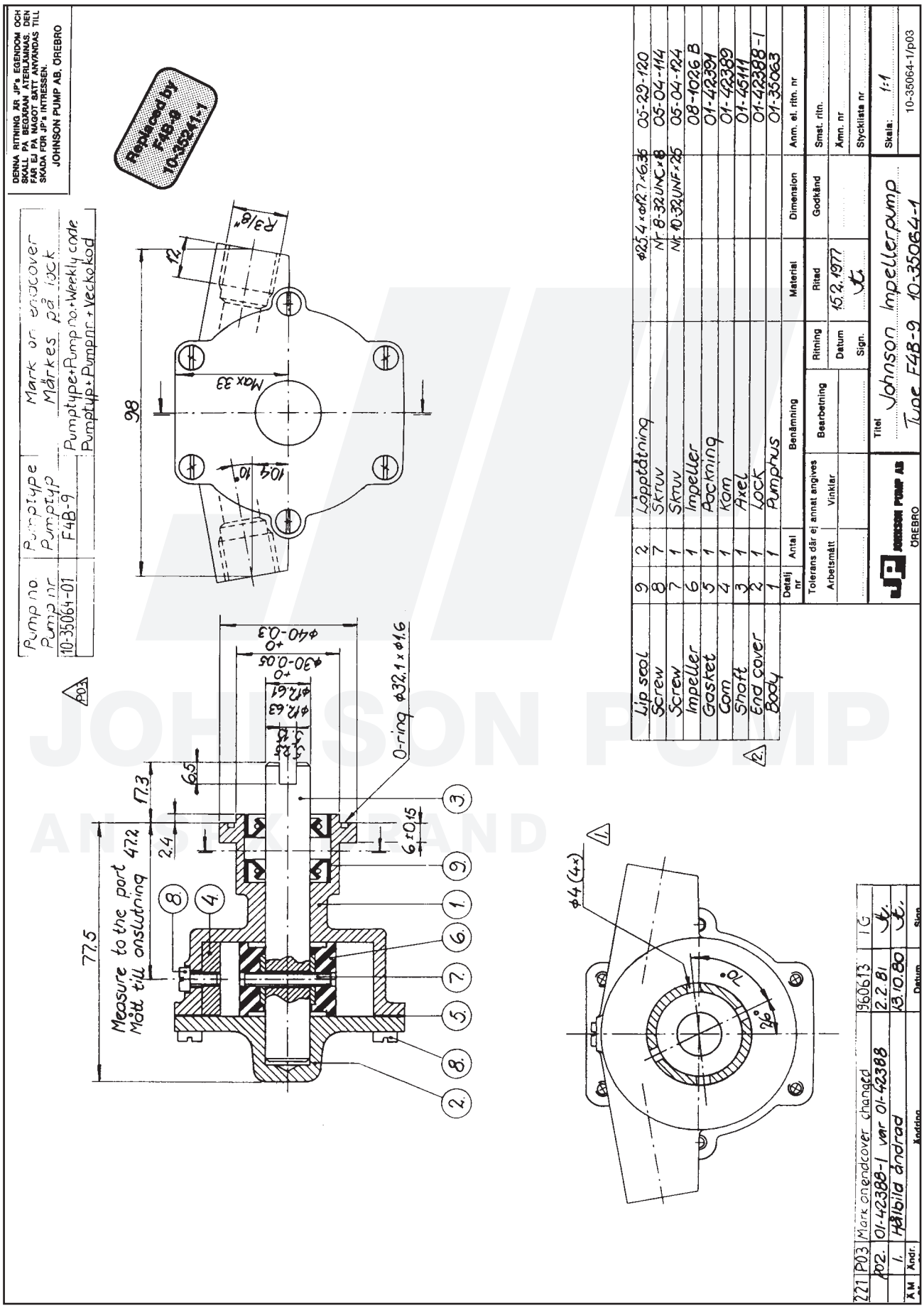

The product, i.e. concept, design and construction, is the property of SPX Johnson Pump Marine AB

10-35087 pump F4B-9

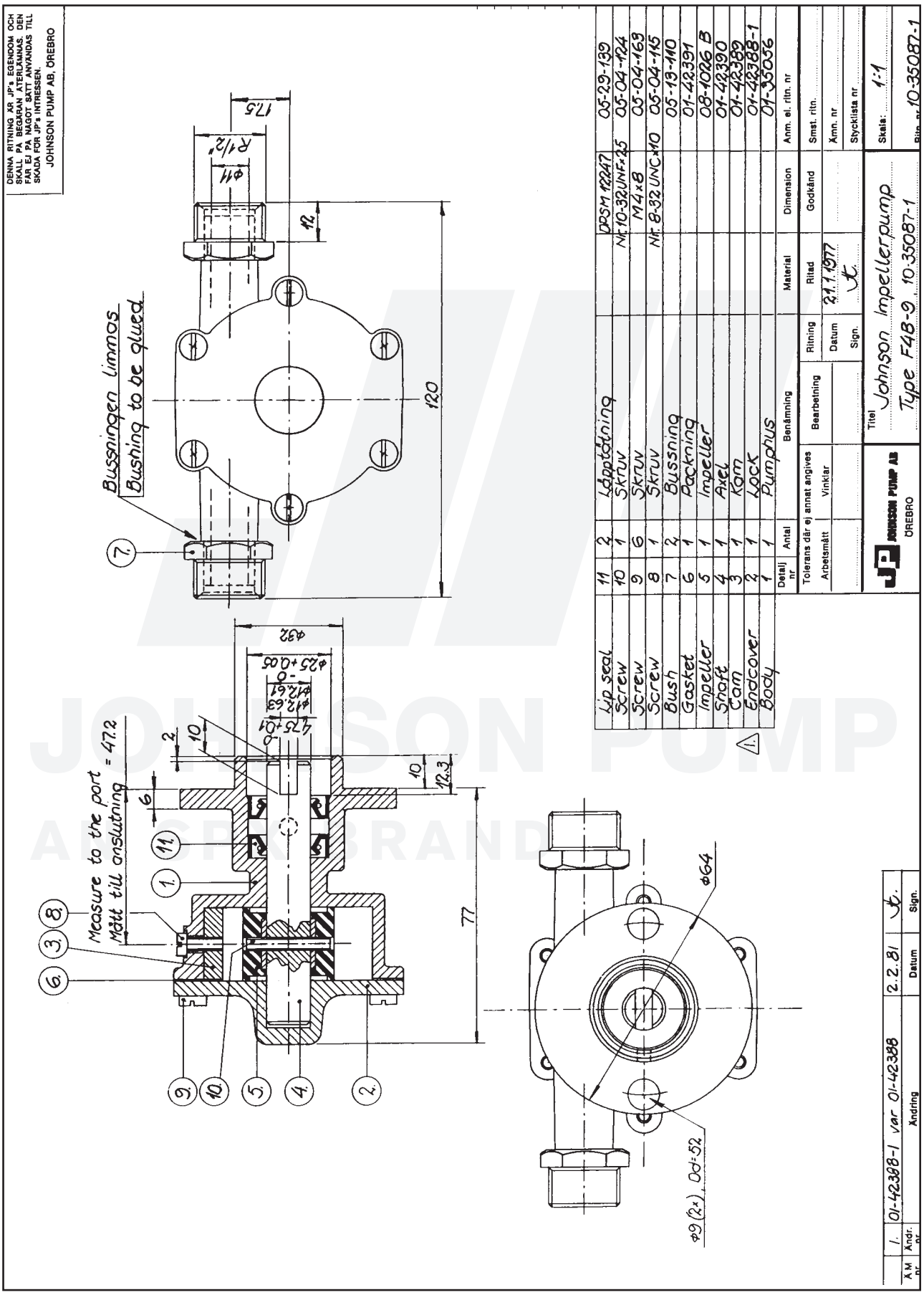

JOHNSON PUMP
ARGON BRAND

10-35094 pump F4B-9

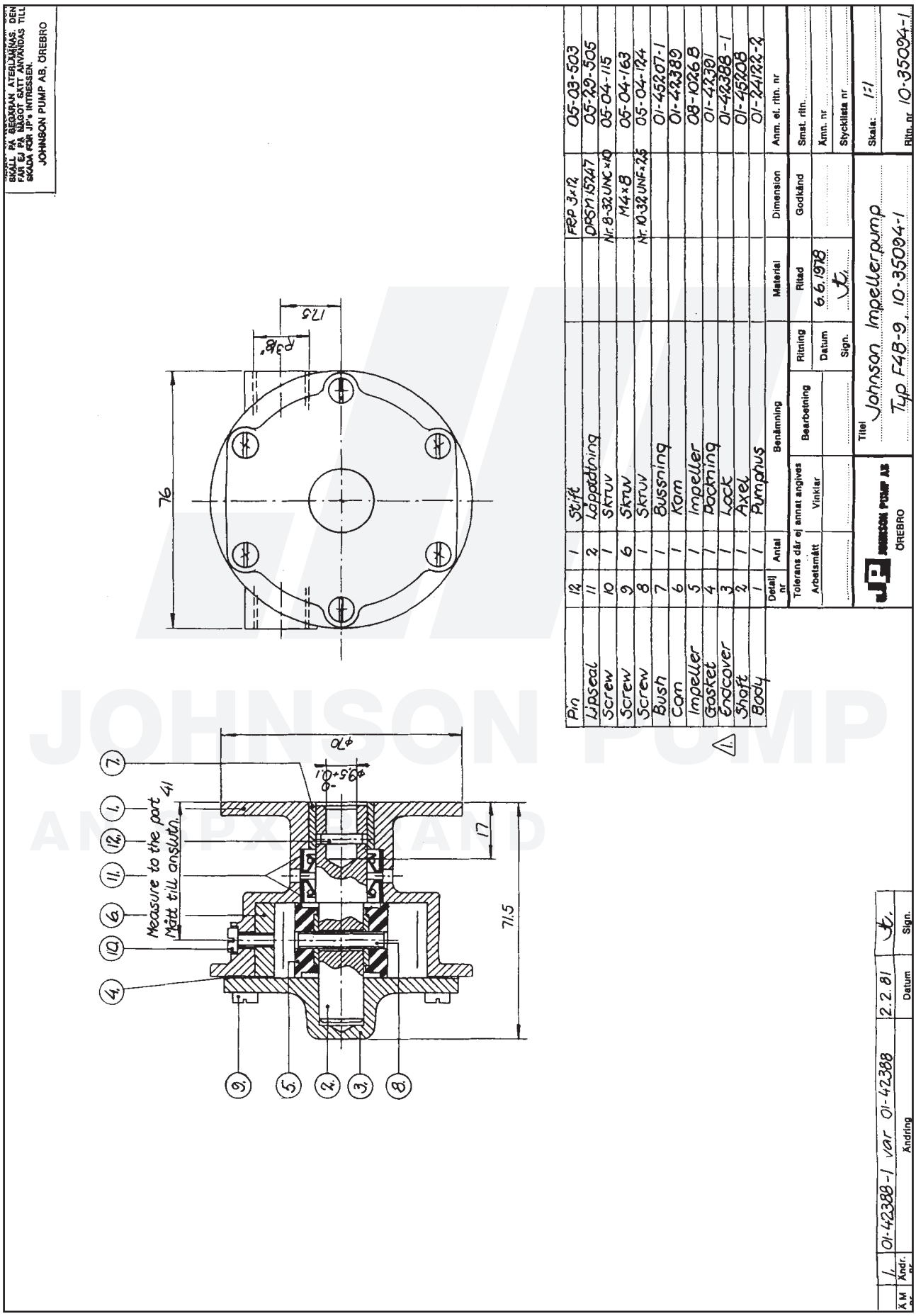

The product, i.e. concept, design and construction, is the property of SPX Johnson Pump Marine AB

JOHNSON PUMP
AN SPX BRAND

F4B-9 Impeller pump
Art. No. 10-35098-1

Part. No.	Description GB	Position	Quantity
01-35099-1	BODY F4B-9	1	1
01-45235	SHAFT F4B-9	2	1
08-1026B-01	IMPELLER VP3593658	3	1
01-42389	CAM 1/1 F4B-	4	1
01-45600	ENDCOVER F4B-9	5	1
01-45284	GASKET F4B-9	6	1
01-46794-03	SCREW 8-32UNCX8	7	1
0.0279.501	SCREW M4X8 ISO1207	9	6
0.2233.010	LIP SEAL 12X24X7 DPSM	10	2
0.0371.028	RETAIN. RING BORE D28 DIN472 SPRST	11	1
0.3431.441	BALL BEARING 6001 ST	12	2
01-45955	WASHER F35/F4B-9	13	1
01-46790-01	WASHER D7.5XD4X1 CU	15	1

The product, i.e. concept, design and construction, is the property of SPX Johnson Pump Marine AB

10-35098 pump F4B-9

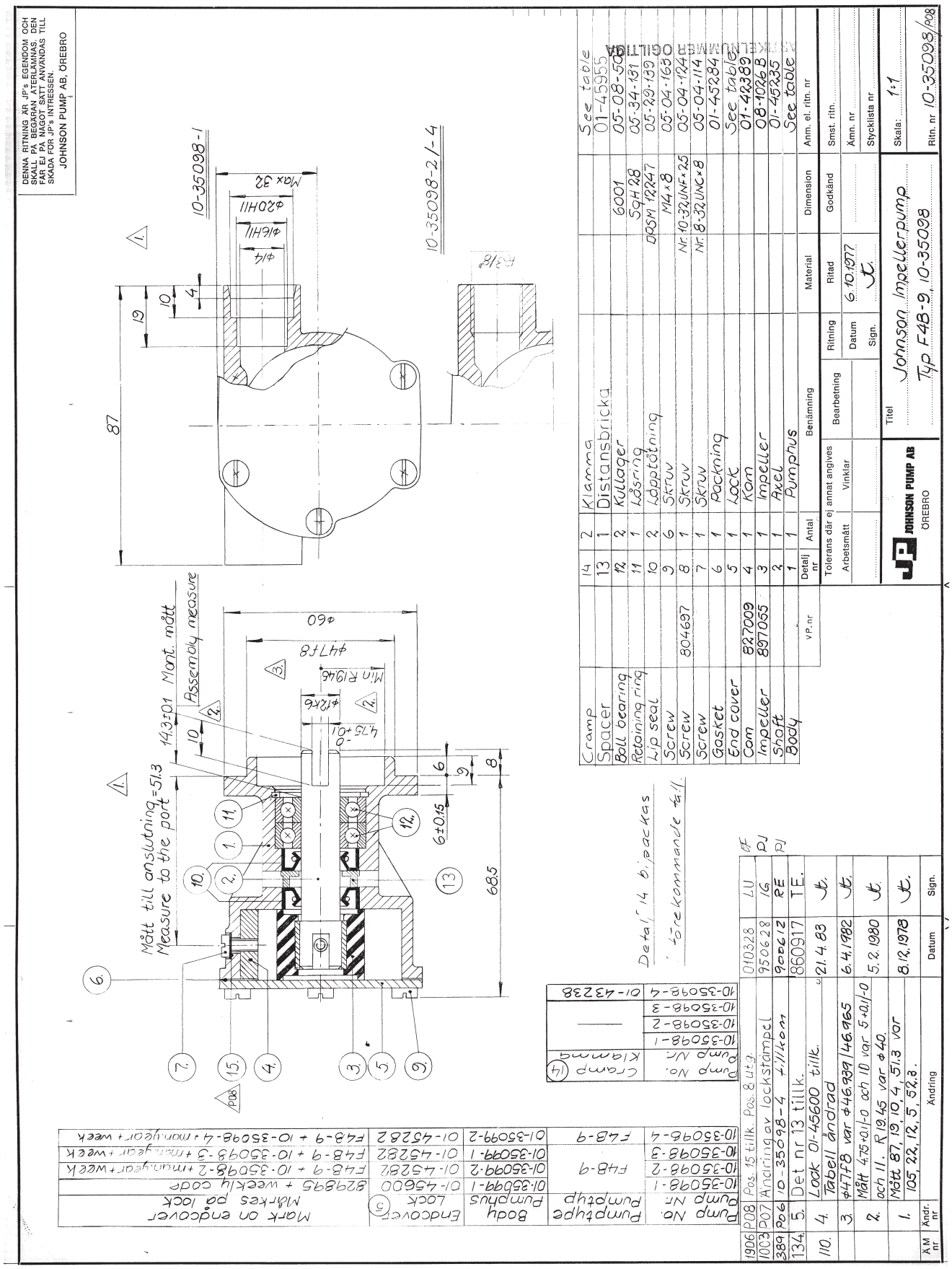

10-35115 pump F4B-9

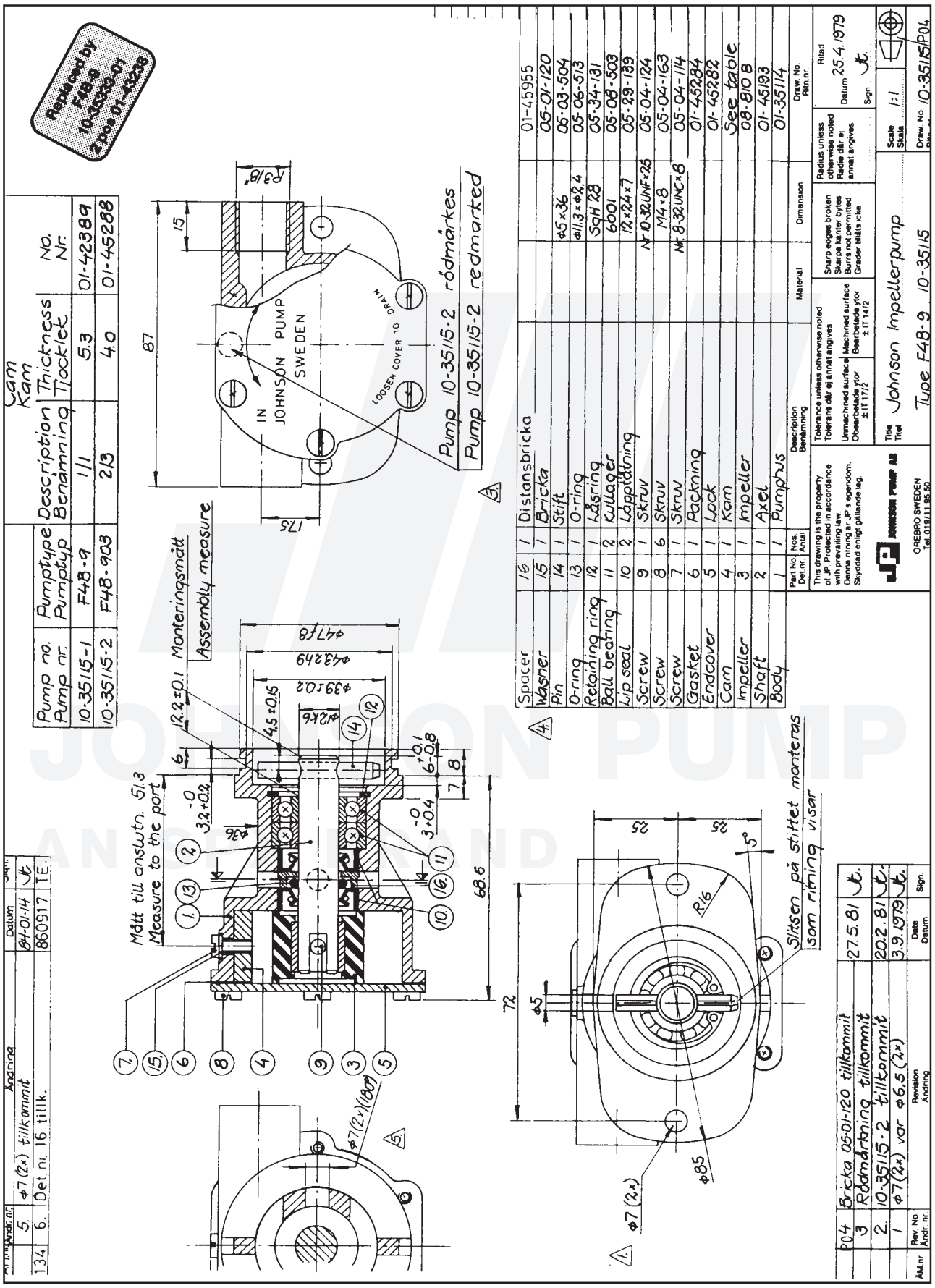

The product, i.e. concept, design and construction, is the property of SPX Johnson Pump Marine AB

JOHNSON PUMP
AN SPX BRAND

F4B-9 Impeller pump
Art. No. 10-35127-1

Part. No.	Description GB	Position	Quantity
01-35099-2	BODY F4B-9	1	1
01-45353	SHAFT F35/F4B-9	2	1
08-810B-1	IMPELLER	3	1
01-42389	CAM 1/1 F4B-	4	1
01-45282	ENDCOVER F4B-9	5	1
01-45284	GASKET F4B-9	6	1
01-46794-03	SCREW 8-32UNCX8	7	1
0.0279.501	SCREW M4X8 ISO1207	9	6
0.2233.010	LIP SEAL 12X24X7 DPSM	10	2
0.0371.028	RETAIN. RING BORE D28 DIN472 SPRST	11	1
0.3431.441	BALL BEARING 6001 ST	12	2
0.2173.401	O-RING 11.1X1.6 SS1586 NBR70	13	1
01-43238	CLAMP F35/F4B-9	14	2
0.2173.473	O-RING 49.6X2.4 SS1586 NBR70	15	1
01-45955	WASHER F35/F4B-9	16	1
01-46790-01	WASHER D7.5XD4X1 CU	17	1
0.0633.714	PLUG TYPE 410027 D14.5MM DBI	0	2
0.3444.001	CARTON NO. 1 170X135X 90	0	1
0.3444.035	PLASTIC BAG 70X100 MM	0	1
JP 533	INSRUCTIONS/IMPELLERCARD	0	1
01-47039	BOX LABEL JP 135X45	0	1

The product, i.e. concept, design and construction, is the property of SPX Johnson Pump Marine AB

10-35127 pump F4B-9

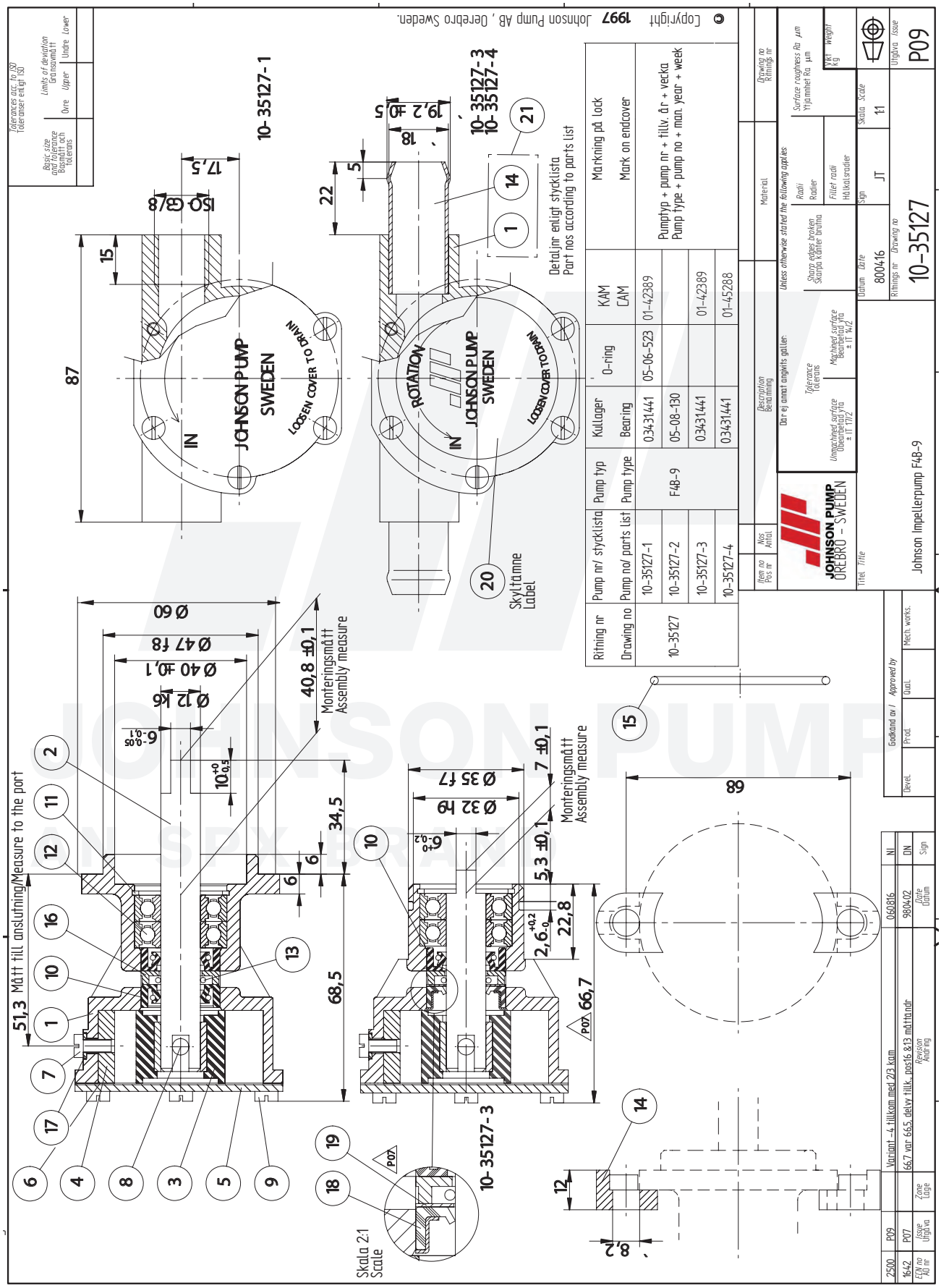

10-35161 pump F4B-9

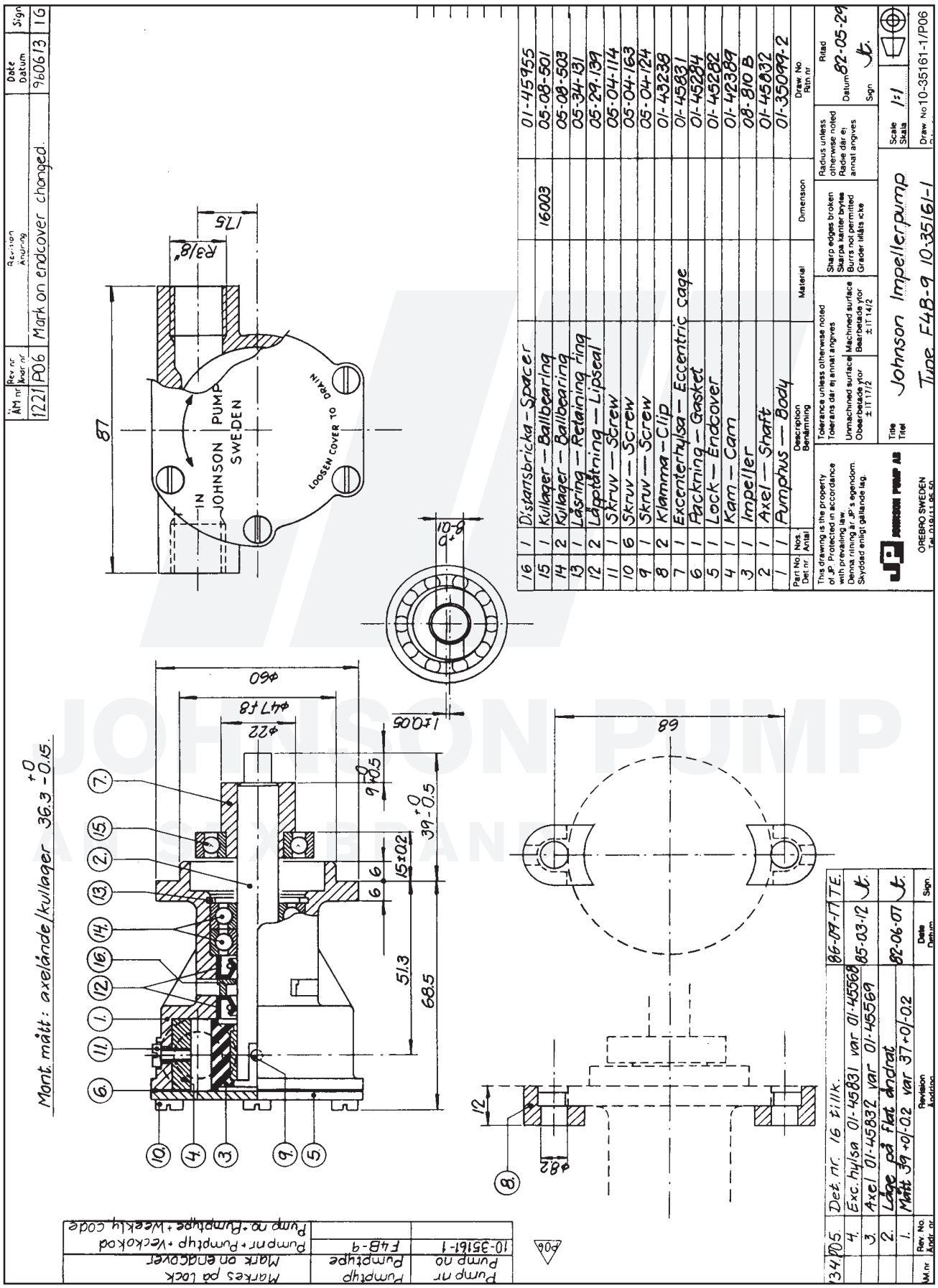

The product, i.e. concept, design and construction, is the property of SPX Johnson Pump Marine AB

10-35167 pump F4B-9

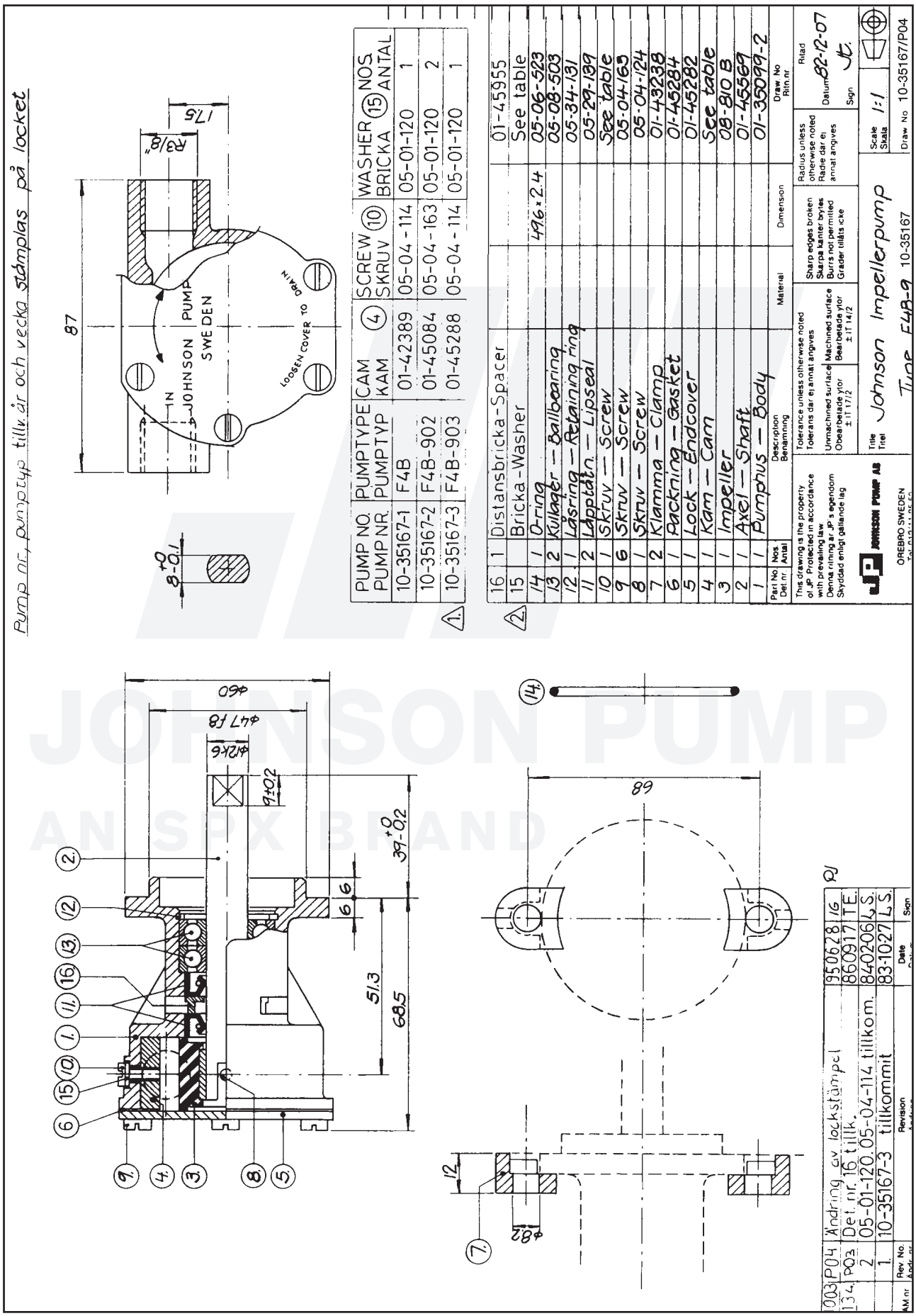

JOHNSON PUMP
AN SPX BRAND

F4B-9 Impeller pump

Art. No. 10-35216-1

Part. No.	Description GB	Position	Quantity
01-35215	BODY F4B-9	1	1
01-45762	SHAFT F4B-9	2	1
08-810B-1	IMPELLER	3	1
01-42389	CAM 1/1 F4B-	4	1
01-45763	ENDCOVER F4B-9	5	1
01-45284	GASKET F4B-9	6	1
01-46794-03	SCREW 8-32UNCX8	7	1
0.0141.700	TAP BOLT M4X8 ISO4017 A2-70	9	6
0.2233.010	LIP SEAL 12X24X7 DPSM	10	1
0.0371.028	RETAIN. RING BORE D28 DIN472 SPRST	11	1
0.3431.441	BALL BEARING 6001 ST	12	2
01-46790-01	WASHER D7.5XD4X1 CU	13	1
01-45955	WASHER F35/F4B-9	14	1
0.2233.251	LIP SEAL 12X24X7 B	15	1
0.0633.701	PLUG TYPE 410025 D14MM DBI	0	2

The product, i.e. concept, design and construction, is the property of SPX Johnson Pump Marine AB

10-35216 pump F4B-9

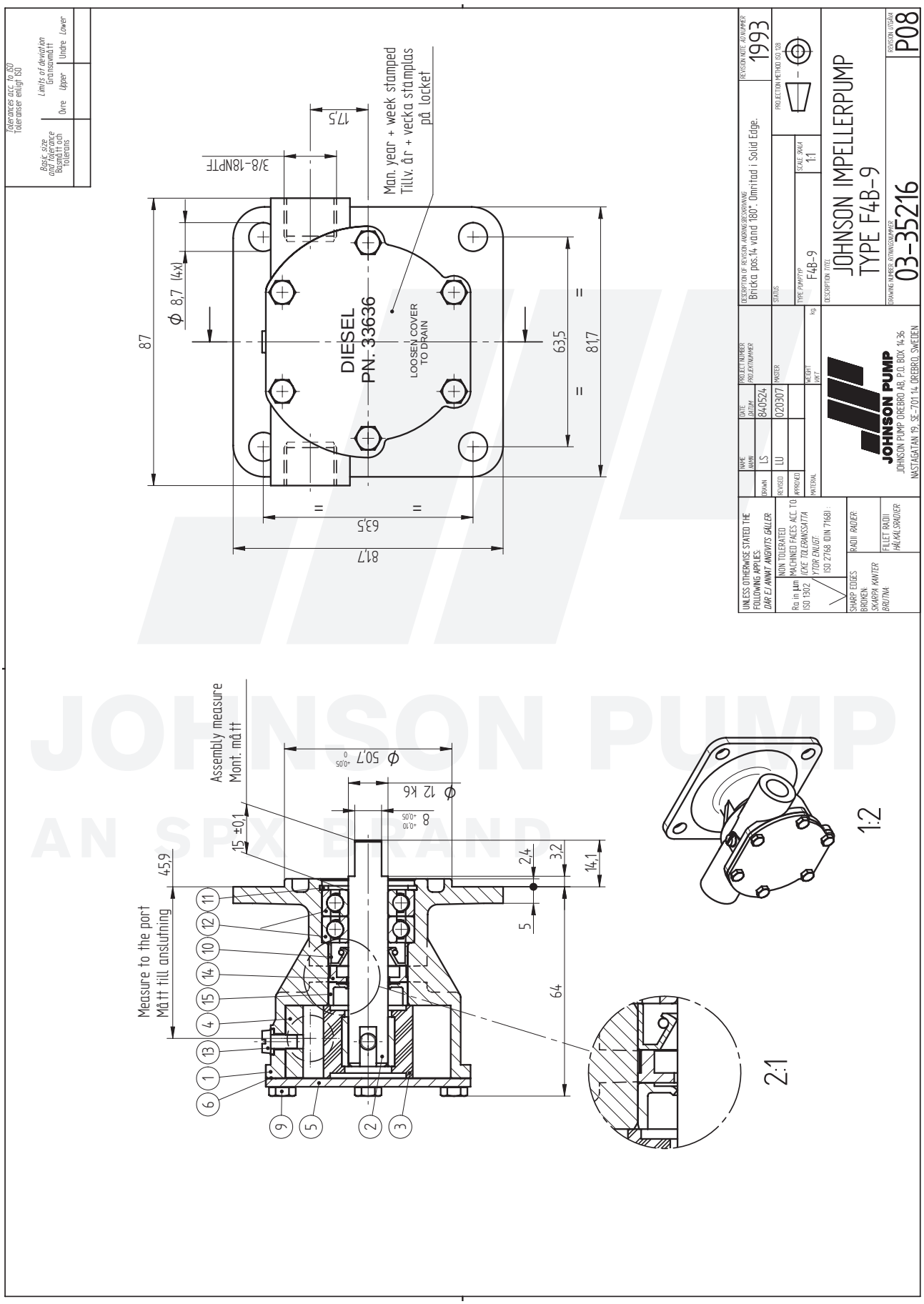

JOHNSON PUMP
AN SPX BRAND

10-35240 pump F4B-9

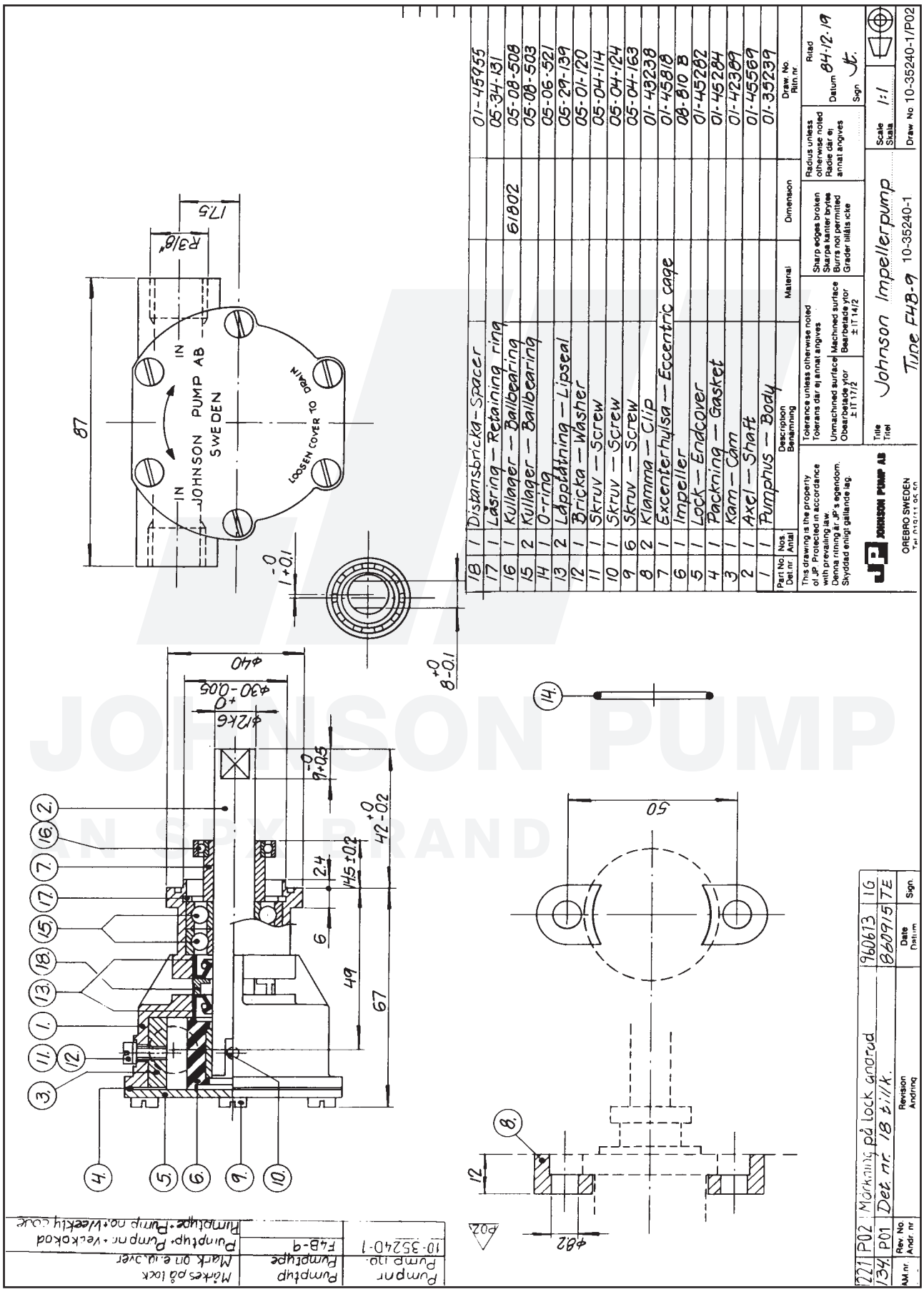

The product, i.e. concept, design and construction, is the property of SPX Johnson Pump Marine AB

10-35241 pump F4B-9

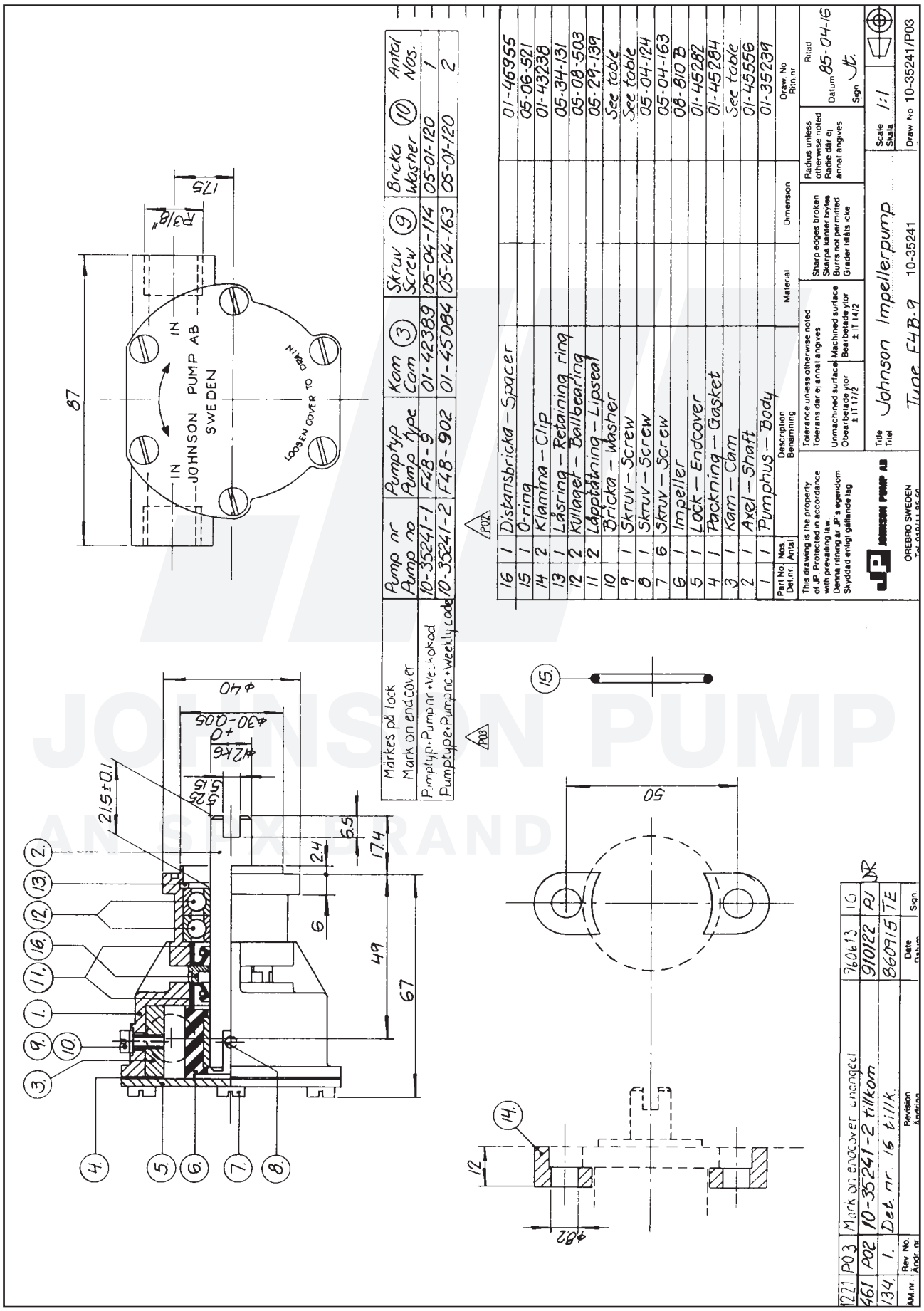

JOHNSON PUMP
AN SPX BRAND

F4B-9 Impeller pump
Art. No 10-35271-01

Part. No.	Description GB	Position	Quantity
01-35099-2	BODY F4B-9	1	1
01-45950	SHAFT F4B-9	2	1
08-810B-1	IMPELLER	3	1
01-42389	CAM 1/1 F4B-	4	1
01-45282	ENDCOVER F4B-9	5	1
01-45284	GASKET F4B-9	6	1
01-45949	ECCENTRIC SLEEVE F4B-9	7	1
01-43238	CLAMP F35/F4B-9	8	2
0.0279.501	SCREW M4X8 ISO1207	10	6
01-46794-03	SCREW 8-32UNCX8	11	1
0.2233.010	LIP SEAL 12X24X7 DPSM	12	2
0.0371.028	RETAIN. RING BORE D28 DIN472 SPRST	13	1
0.3431.441	BALL BEARING 6001 ST	14	2
0.3431.204	BALL BEARING 16003 ST	15	1
01-45955	WASHER F35/F4B-9	16	1
01-46790-01	WASHER D7.5XD4X1 CU	17	1
0.0633.701	PLUG TYPE 410025 D14MM DBI	0	2
0.3444.001	CARTON NO. 1 170X135X 90	0	1
01-47039	BOX LABEL JP 135X45	0	1
JP 533	INSRUCTIONS/IMPELLERCARD	0	1

The product, i.e. concept, design and construction, is the property of SPX Johnson Pump Marine AB

10-35271 pump F4B-9

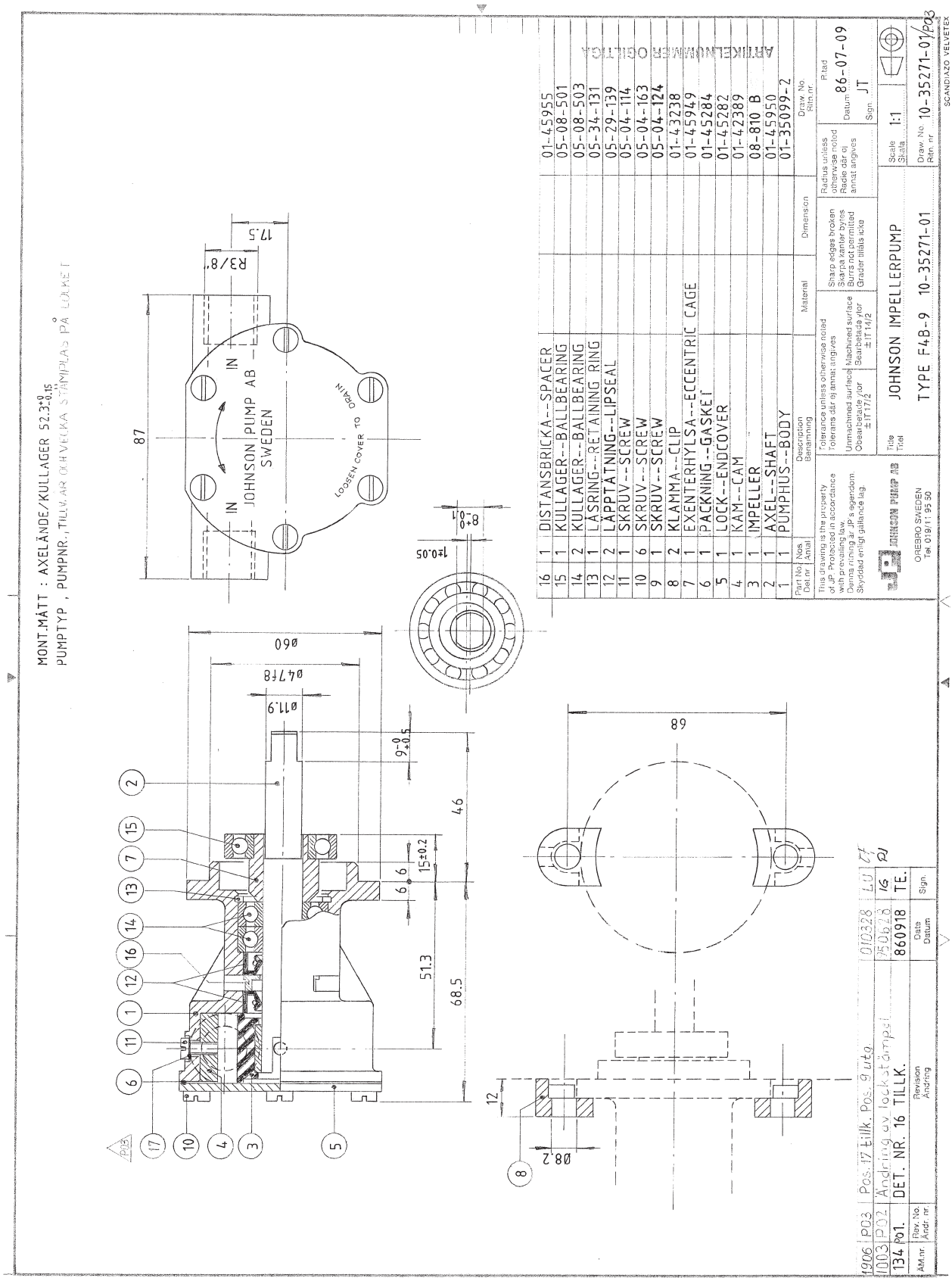

F4B-9 Impeller pump
Art. No. 10-35333-01

Part no.	Description GB	Position	Quantity
01-35099-2	BODY F4B-9	1	1
01-45193	SHAFT F35/F4B-9	2	1
08-810B-1	IMPELLER	3	1
01-42389	CAM 1/1 F4B-	4	1
01-45282	ENDCOVER F4B-9	5	1
01-45284	GASKET F4B-9	6	1
01-46794-03	SCREW 8-32UNCX8	7	1
0.0279.501	SCREW M4X8 ISO1207	9	6
0.2233.010	LIP SEAL 12X24X7 DPSM	10	2
0.0371.028	RETAIN. RING BORE D28 DIN472 SPRST	11	1
0.3431.441	BALL BEARING 6001 ST	12	2
01-45955	WASHER F35/F4B-9	13	1
0.0414.666	LOCKPIN FRP 5X36 DIN1481 ST	14	1
01-46790-01	WASHER D7.5XD4X1 CU	15	1

The product, i.e. concept, design and construction, is the property of SPX Johnson Pump Marine AB

10-35333 pump F4B-9

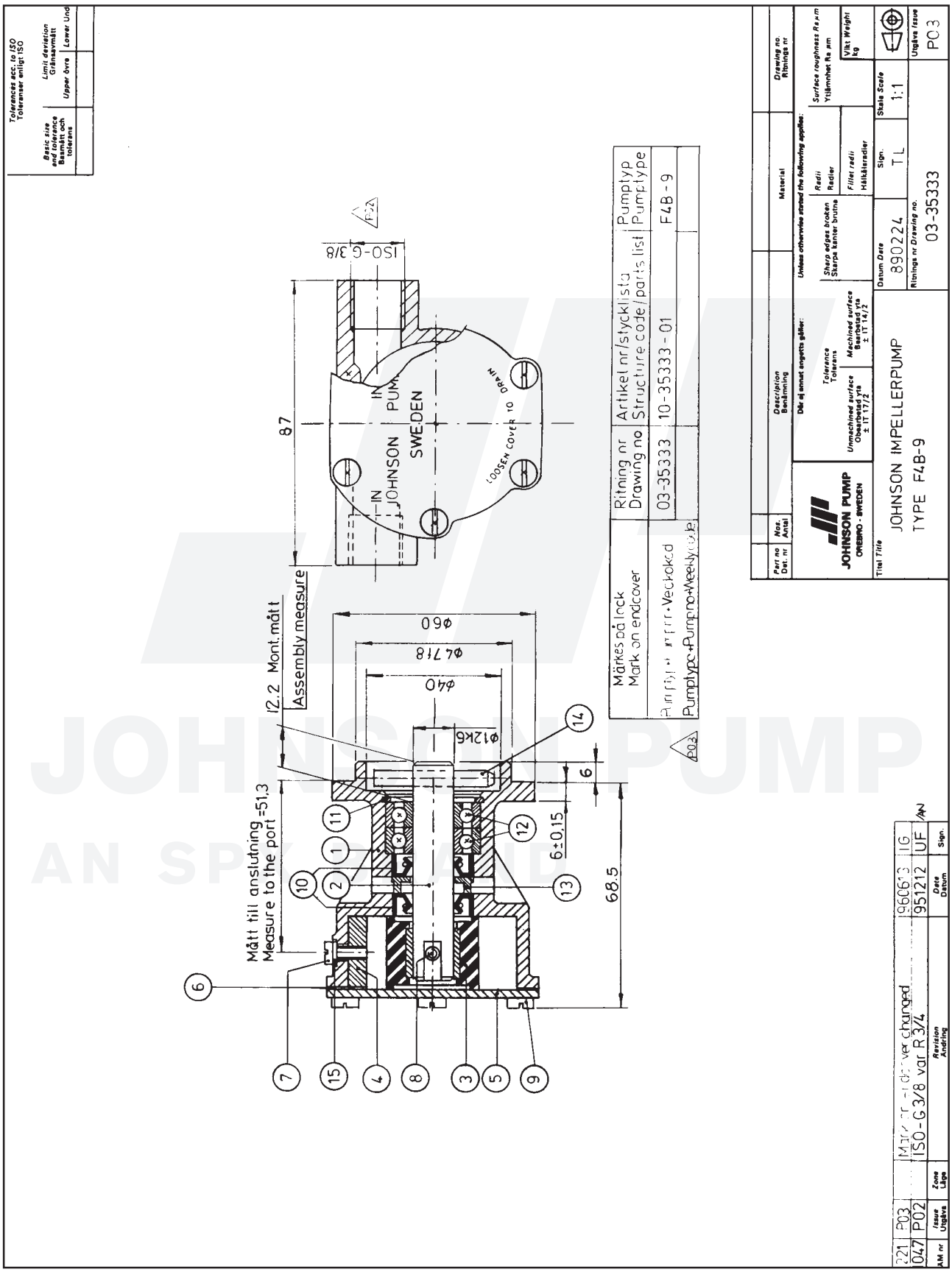

JOHNSON PUMP
AN SPX BRAND

F4B-9 **Impeller pump**
Art. No. **10-35355-01**

Part. No.	Description GB	Position	Quantity
0.0279.300	SCREW M4X8 ISO1207 A4	9	6
0.0371.028	RETAIN. RING BORE D28 DIN472 SPRST	11	1
0.2173.401	O-RING 11.1X1.6 SS1586 NBR70	13	1
0.2173.473	O-RING 49.6X2.4 SS1586 NBR70	15	1
0.2233.010	LIP SEAL 12X24X7 DPSM	10	2
0.3431.441	BALL BEARING 6001 ST	12	2
01-35099-2	BODY F4B-9	1	1
01-42389	CAM 1/1 F4B-	4	1
01-43238	CLAMP F35/F4B-9	14	2
01-45282	ENDCOVER F4B-9	5	1
01-45284	GASKET F4B-9	6	1
01-45955	WASHER F35/F4B-9	16	1
01-46167	SHAFT F4B-9	2	1
01-46794-03	SCREW 8-32UNCX8	7	1
08-810B-1	IMPELLER	3	1

The product, i.e. concept, design and construction, is the property of SPX Johnson Pump Marine AB

10-35355 pump F4B-9

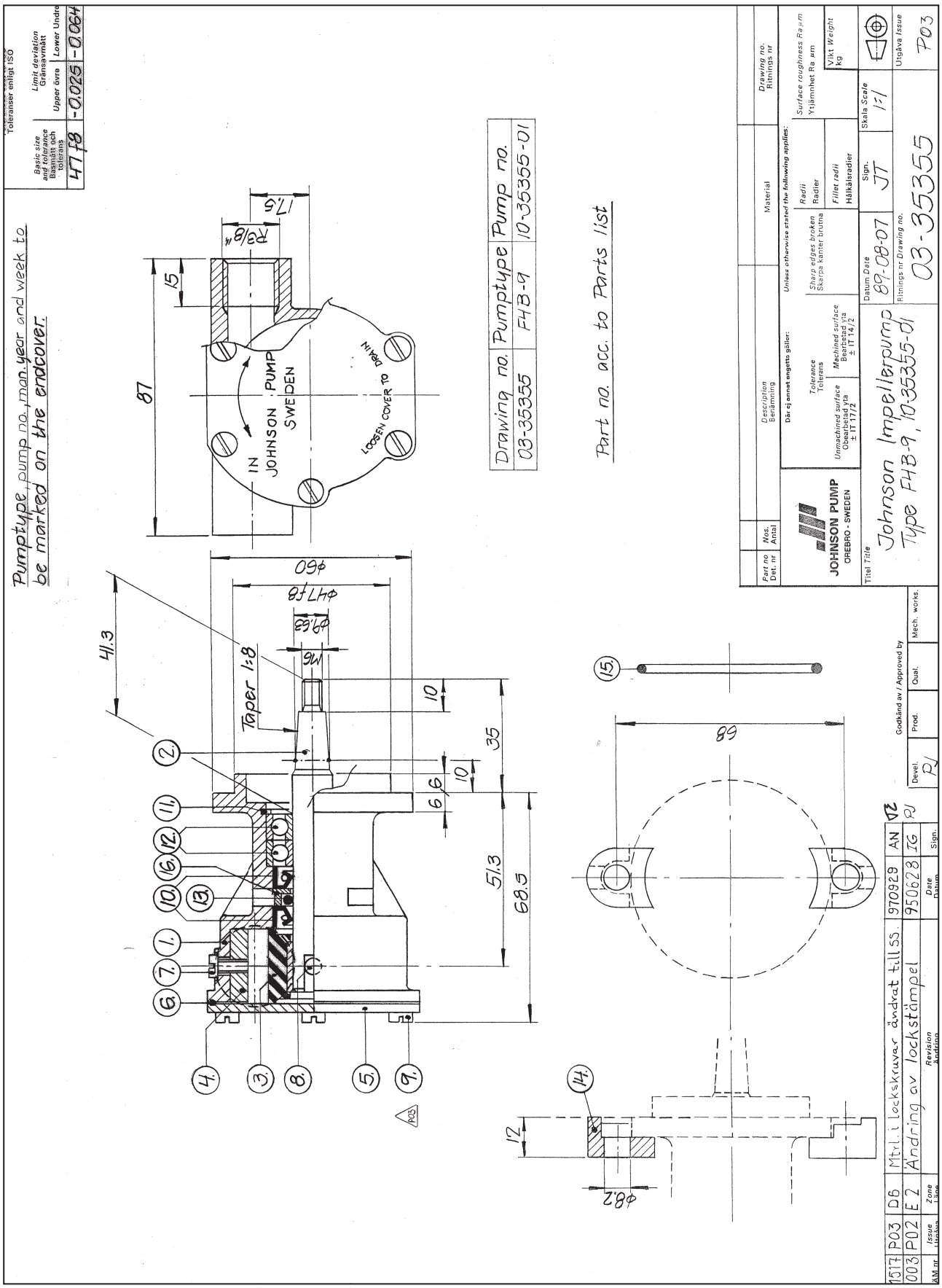

F4B-9 Impeller pump
Art. No. 10-35725-01

Part no.	Description GB	Position	Quantity
0.0141.700	TAP BOLT M4X8 ISO4017 A2-70	11	6
0.0371.028	RETAIN. RING BORE D28 DIN472 SPRST	15	1
0.2173.401	O-RING 11.1X1.6 SS1586 NBR70	12	1
0.2233.010	LIP SEAL 12X24X7 DPSM	14	2
0.3431.441	BALL BEARING 6001 ST	13	2
01-42389	CAM 1/1 F4B-	3	1
01-45282	ENDCOVER F4B-9	4	1
01-45284	GASKET F4B-9	5	1
01-45955	WASHER F35/F4B-9	6	1
01-46049	SPACER F4B-9	7	1
01-46460	SHAFT F4B-9	2	1
01-46790-01	WASHER D7.5XD4X1 CU	8	1
01-46794-03	SCREW 8-32UNCX8	9	1
04-46458-01	BODY COMPLETE	1	1
08-810B-1	IMPELLER	16	1

The product, i.e. concept, design and construction, is the property of SPX Johnson Pump Marine AB

10-35725 pump F4B-9

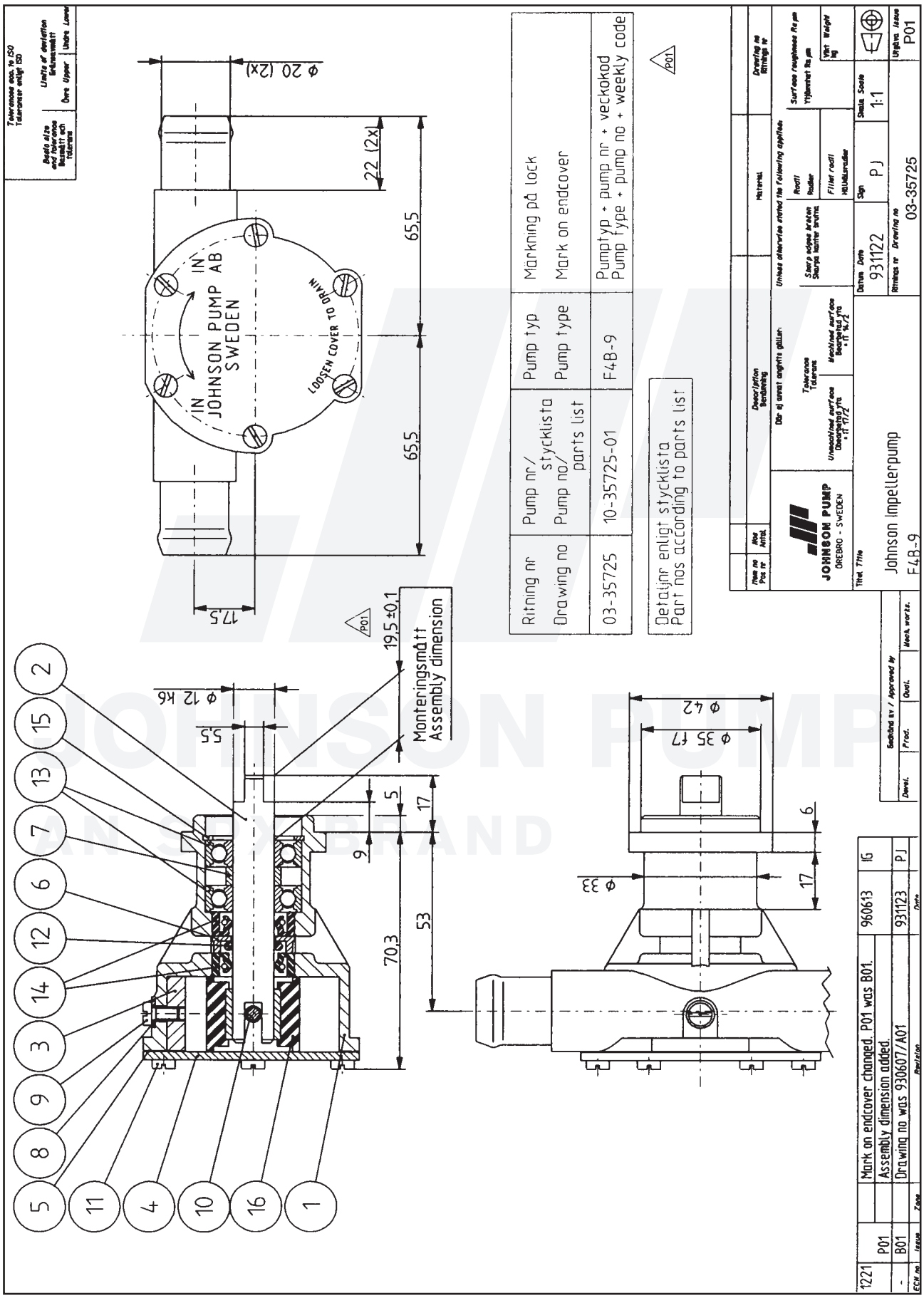

F4B-9 Impeller pump
Art. No. 10-36006-01

Part. No.	Description GB	Position	Quantity
01-36005	PUMP BODY F4B-9 WESTERBEKE	1	1
01-47065	SHAFT F4B-9	2	1
01-46007-2	ENDCOVER F4/F5B NEUTRAL	3	1
08-810B-12	IMPELLER W 48080	4	1
01-42389	CAM 1/1 F4B-	5	1
01-46737-2	WEAR PLATE F4B	6	1
01-42400	PIN F35B-/F7B/F70B	7	1
01-45659	WASHER F4B-8/-9	8	1
0.0141.700	TAP BOLT M4X8 ISO4017 A2-70	9	6
0.2173.476	O-RING 54.6X2.4 NBR70	10	1
0.2173.432	O-RING 11.3X2.4 SS1586 NBR70	11	1
01-46790-01	WASHER D7.5XD4X1 CU	12	1
01-46794-03	SCREW 8-32UNCX8	13	1
0.2247.021	MECH.SEAL COMPL D12	14	1
0.2233.026	LIP SEAL OIL 12X24X7	15	1
0.3431.441	BALL BEARING 6001 ST	16	2
0.0370.512	EXT. CIRCLIP D12 DIN471 FB	17	1
0.0371.028	RETAIN. RING BORE D28 DIN472 SPRST	18	1
01-47054	LABEL	19	1
01-47055-1	PAINT PROTECTION ø 41	0	1
0.0633.701	PLUG TYPE 410025 D14MM DBI	0	2

The product, i.e. concept, design and construction, is the property of SPX Johnson Pump Marine AB

10-36006 pump F4B-9

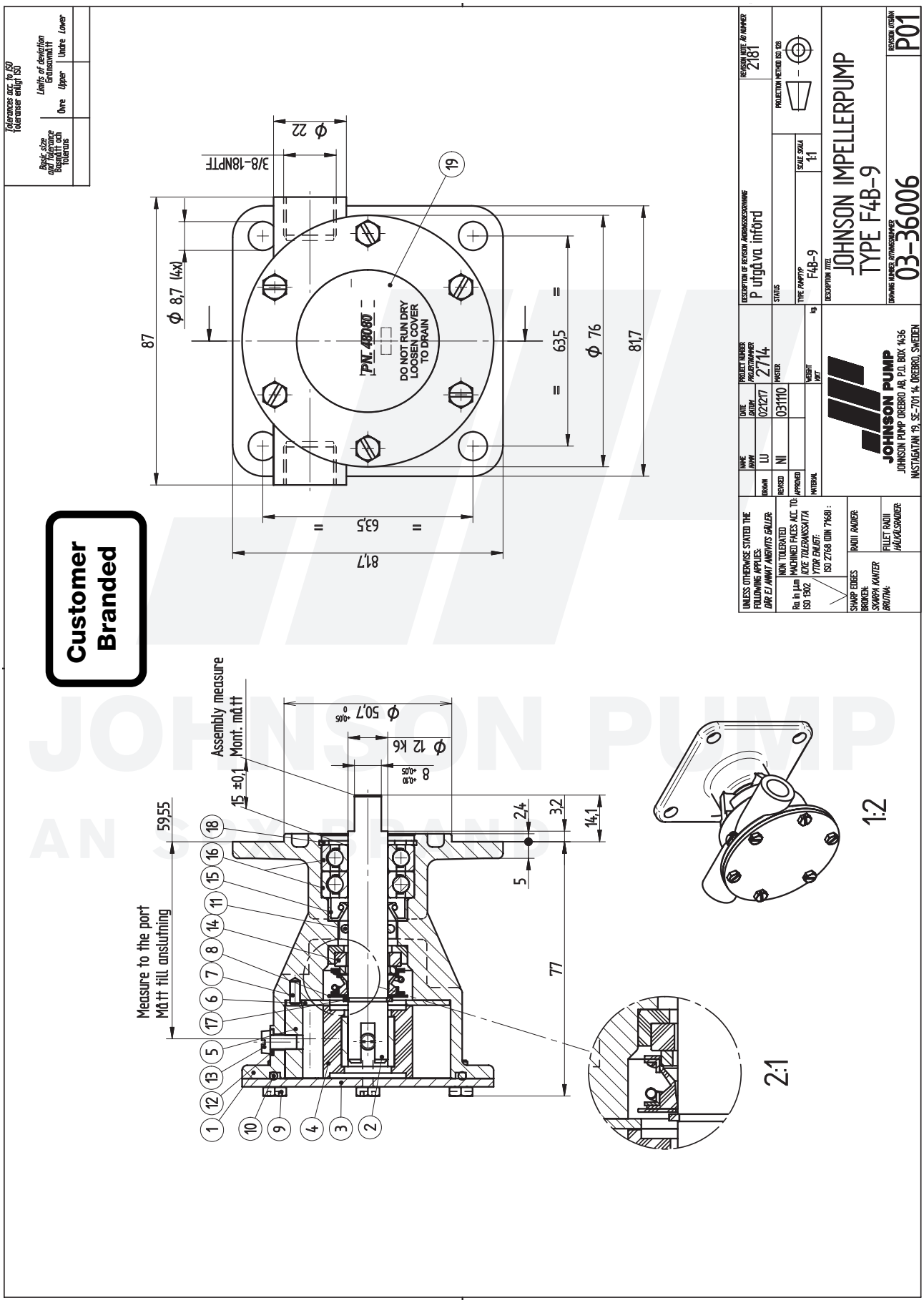

F5B-905 Impeller pump
Art. No. 10-13159-04

Part no.	Description GB	Position	Quantity
01-24469-2	BODY F5B-9 (VPoA)	1	1
01-24470-1	ENDCOVER F5B-9 (VPoA)	2	1
01-24500-2	PULLEY F5B-9 (VPoA)	4	1
01-46475	SHAFT F5B-9	5	1
01-46540	GASKET F5B-9	6	1
01-46472	SPACER F5B-9	7	1
01-35862	PROTECTIVE RING	8	1
0.0141.502	SCREW M5X8 DIN933SLOTTED BRASS	9	4
0.2173.471	O-RING 14.3X2.4 SS1586 NBR70	10	1
0.3431.761	BALL BEARING D 15 6202-2RS1 (ST)	11	2
0.2233.001	LIP SEAL 16X28X7 DPSM	12	1
0.0371.035	RETAIN. RING BORE D35 DIN472 SPRST	13	1
08-1027B-01	IMPELLER VP825940	14	1

F5B-905 Impeller pump
Art. No. 10-13159-07

Part no.	Description GB	Position	Quantity
01-24469-2	BODY F5B-9 (VPoA)	1	1
01-24470-1	ENDCOVER F5B-9 (VPoA)	2	1
01-46706	CAM F5B-9	3	1
01-24506-3	PULLEY F5B-9	4	1
01-46475	SHAFT F5B-9	5	1
01-46540	GASKET F5B-9	6	1
01-46472	SPACER F5B-9	7	1
01-35862	PROTECTIVE RING	8	1
0.0141.502	SCREW M5X8 DIN933SLOTTED BRASS	9	4
0.2173.471	O-RING 14.3X2.4 SS1586 NBR70	10	1
0.3431.761	BALL BEARING D 15 6202-2RS1 (ST)	11	2
0.2233.001	LIP SEAL 16X28X7 DPSM	12	1
0.0371.035	RETAIN. RING BORE D35 DIN472 SPRST	13	1
08-1027B-01	IMPELLER VP825940	14	1

F5B-905 Impeller pump
Art. No. 10-13159-05

Part no.	Description GB	Position	Quantity
01-24469-3	BODY F5B-9 (VPoA)	1	1
01-24470-1	ENDCOVER F5B-9 (VPoA)	2	1
01-24506-2	PULLEY F5B-9	4	1
01-46475	SHAFT F5B-9	5	1
01-46540	GASKET F5B-9	6	1
01-46472	SPACER F5B-9	7	1
01-35862	PROTECTIVE RING	8	1
0.0141.502	SCREW M5X8 DIN933SLOTTED BRASS	9	4
0.2173.471	O-RING 14.3X2.4 SS1586 NBR70	10	1
0.3431.761	BALL BEARING D 15 6202-2RS1 (ST)	11	2
0.2233.001	LIP SEAL 16X28X7 DPSM	12	1
0.0371.035	RETAIN. RING BORE D35 DIN472 SPRST	13	1
08-1027B-01	IMPELLER VP825940	14	1

F5B-905 Impeller pump
Art. No. 10-13159-08

Part no.	Description GB	Position	Quantity
01-24469-3	BODY F5B-9 (VPoA)	1	1
01-24470-1	ENDCOVER F5B-9 (VPoA)	2	1
01-46706	CAM F5B-9	3	1
01-24500-2	PULLEY F5B-9 (VPoA)	4	1
01-46475	SHAFT F5B-9	5	1
01-46540	GASKET F5B-9	6	1
01-46472	SPACER F5B-9	7	1
01-35862	PROTECTIVE RING	8	1
0.0141.502	SCREW M5X8 DIN933SLOTTED BRASS	9	4
0.2173.471	O-RING 14.3X2.4 SS1586 NBR70	10	1
0.3431.761	BALL BEARING D 15 6202-2RS1 (ST)	11	2
0.2233.001	LIP SEAL 16X28X7 DPSM	12	1
0.0371.035	RETAIN. RING BORE D35 DIN472 SPRST	13	1
08-1027B-01	IMPELLER VP825940	14	1

JOHNSON ALSEAL AND PUMP

The product, i.e. concept, design and construction, is the property of SPX Johnson Pump Marine AB

10-13159 pump F5B-905

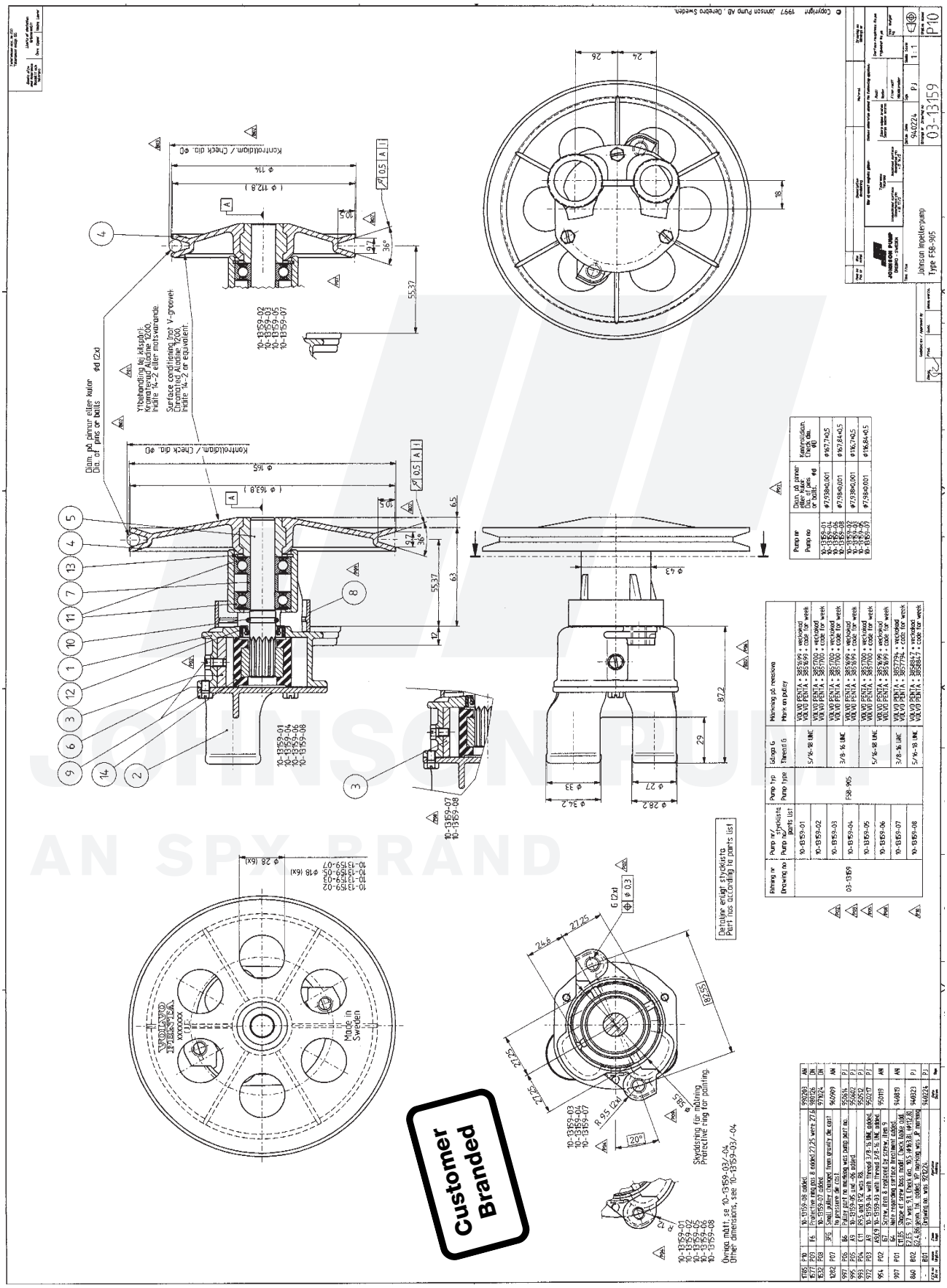

JOHNSON PUMP
AN SPX BRAND

10-13283 pump F5B-9

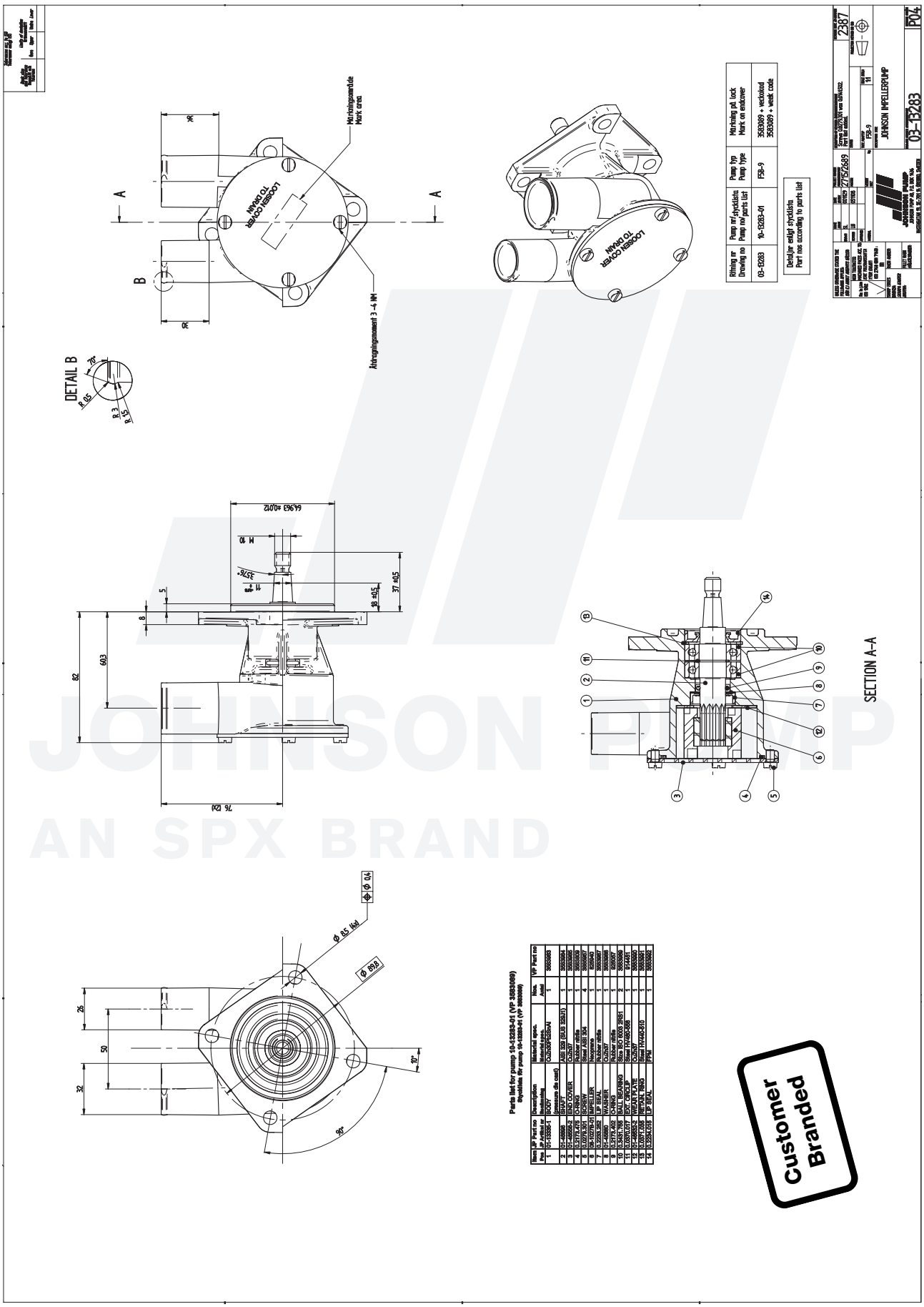

JOHNSON PUMP
AN SPX BRAND

The product, i.e. concept, design and construction, is the property of SPX Johnson Pump Marine AB

10-13328 pump F5B-9

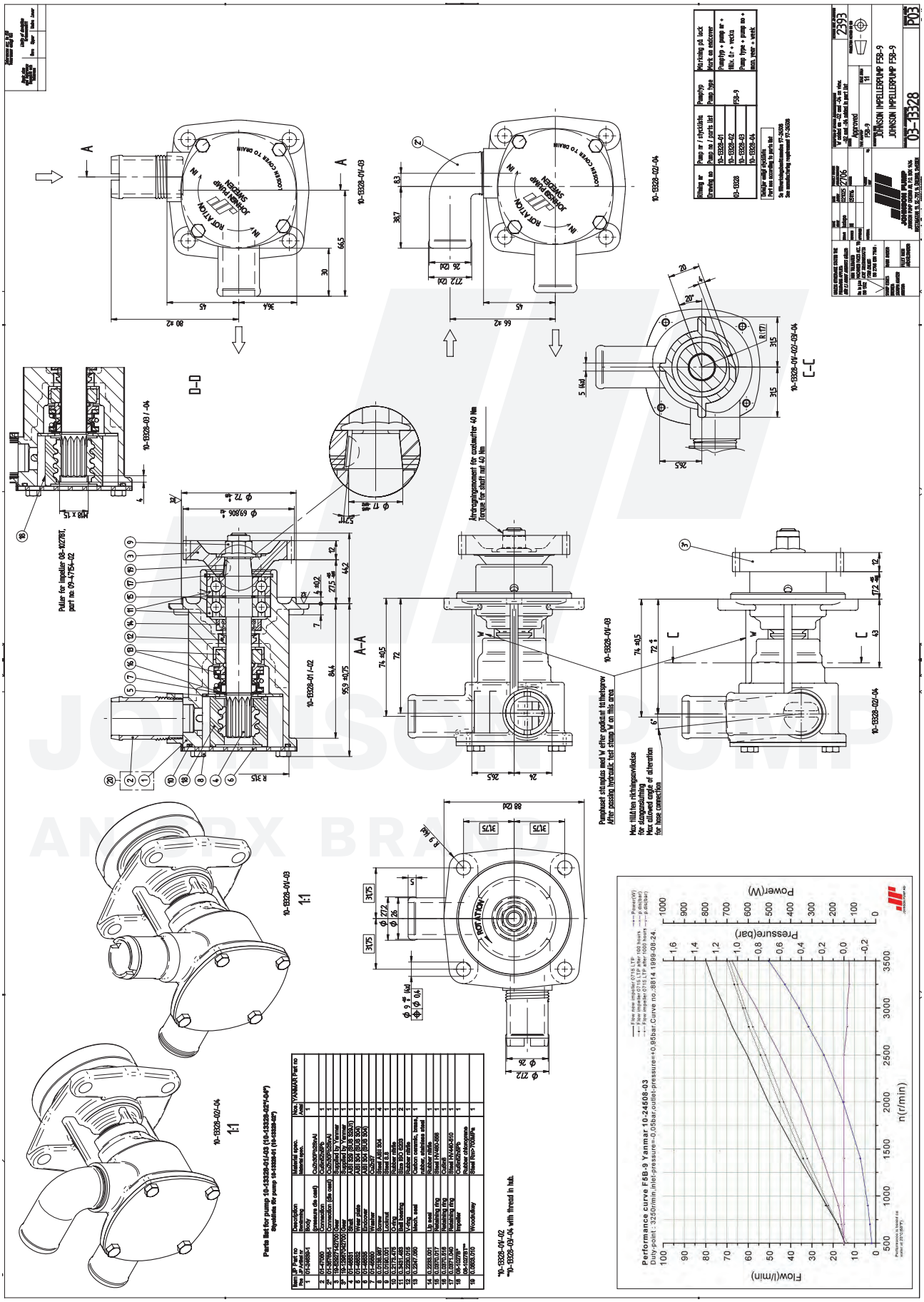

10-13344 pump F5B-9

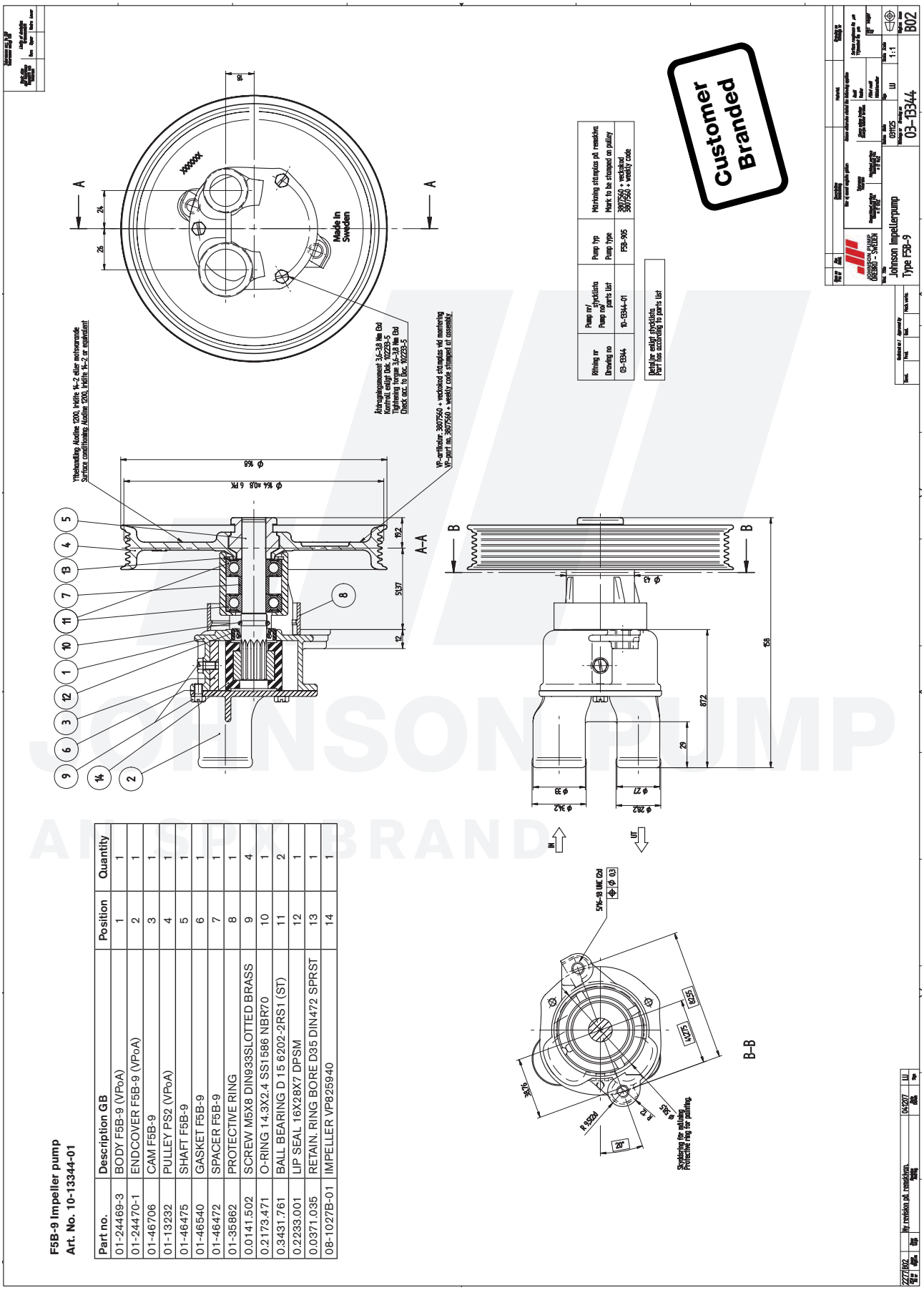

F5B-9 Impeller pump
Art. No. 10-13344-01

Part no.	Description GB	Position	Quantity
01-24469-3	BODY F5B-9 (VPoA)	1	1
01-24470-1	ENDCOVER F5B-9 (VPoA)	2	1
01-46706	CAM F5B-9	3	1
01-13232	PULLEY PS2 (VPoA)	4	1
01-46475	SHAFT F5B-9	5	1
01-46540	GASKET F5B-9	6	1
01-46472	SPACER F5B-9	7	1
01-35862	PROTECTIVE RING	8	1
0.0141.502	SCREW M5X8 DIN933SLOTTED BRASS	9	4
0.2173.471	O-RING 14.3X2.4 SS1586 NBR70	10	1
0.3431.761	BALL BEARING D 15 6202-2RS1 (ST)	11	2
0.2233.001	LIP SEAL 16X28X7 DPSM	12	1
0.0371.035	RETAIN. RING BORE D35 DIN472 SPRST	13	1
08-1027B-01	IMPELLER VP825940	14	1

JOHNSON PUMP
ALL SPX BRANDS

The product, i.e. concept, design and construction, is the property of SPX Johnson Pump Marine AB

JOHNSON PUMP
AN SPX BRAND

F5B-9 Impeller pump
Art. No. 10-13392-01

Part no.	Description GB	Position	Quantity
01-24115-6	BODY F5B-9	1	1
01-35213-3	FLANGE F5B-9	2	1
01-47217	SHAFT F5B-9	3	1
01-46007	ENDCOVER F4/F5B NEUTRAL	4	1
0.0279.500	SCREW M4X10 ISO1207	5	6
08-1027B-1	IMPELLER	6	1
01-42399	WEAR PLATE F5B-	7	1
0.2233.001	LIP SEAL 16X28X7 DPSM	8	1
0.2173.403	O-RING 12.3X2.4 SS1586 NBR70	9	1
01-45186	WASHER F5B-9	10	1
0.3431.761	BALL BEARING D 15 6202-2RS1 (ST)	11	2
0.0141.910	TAP BOLT M6X16 DIN933 8.8ZP	12	4
0.0350.116	WASHER D 6.4X12.5X1.6 DIN125 STZN	13	4
0.0371.035	RETAIN. RING BORE D35 DIN472 SPRST	14	1
0.0370.015	EXT. CIRCLIP D15 DIN471 ST	15	1
01-42400	PIN F35B-/F7B/F70B	16	1
01-46794-05	SCREW 10-32UNFX8 BRASS	17	1
01-42401	GASKET F5B-	18	1
01-45976	CAM F5B-903	19	1
0.0633.713	PLUG TYPE 410041 D22.7MM DBI	0	2
0.0633.714	PLUG TYPE 410027 D14.5MM DBI	0	1
01-47054	LABEL	0	1

The product, i.e. concept, design and construction, is the property of SPX Johnson Pump Marine AB

10-13392 pump F5B-9

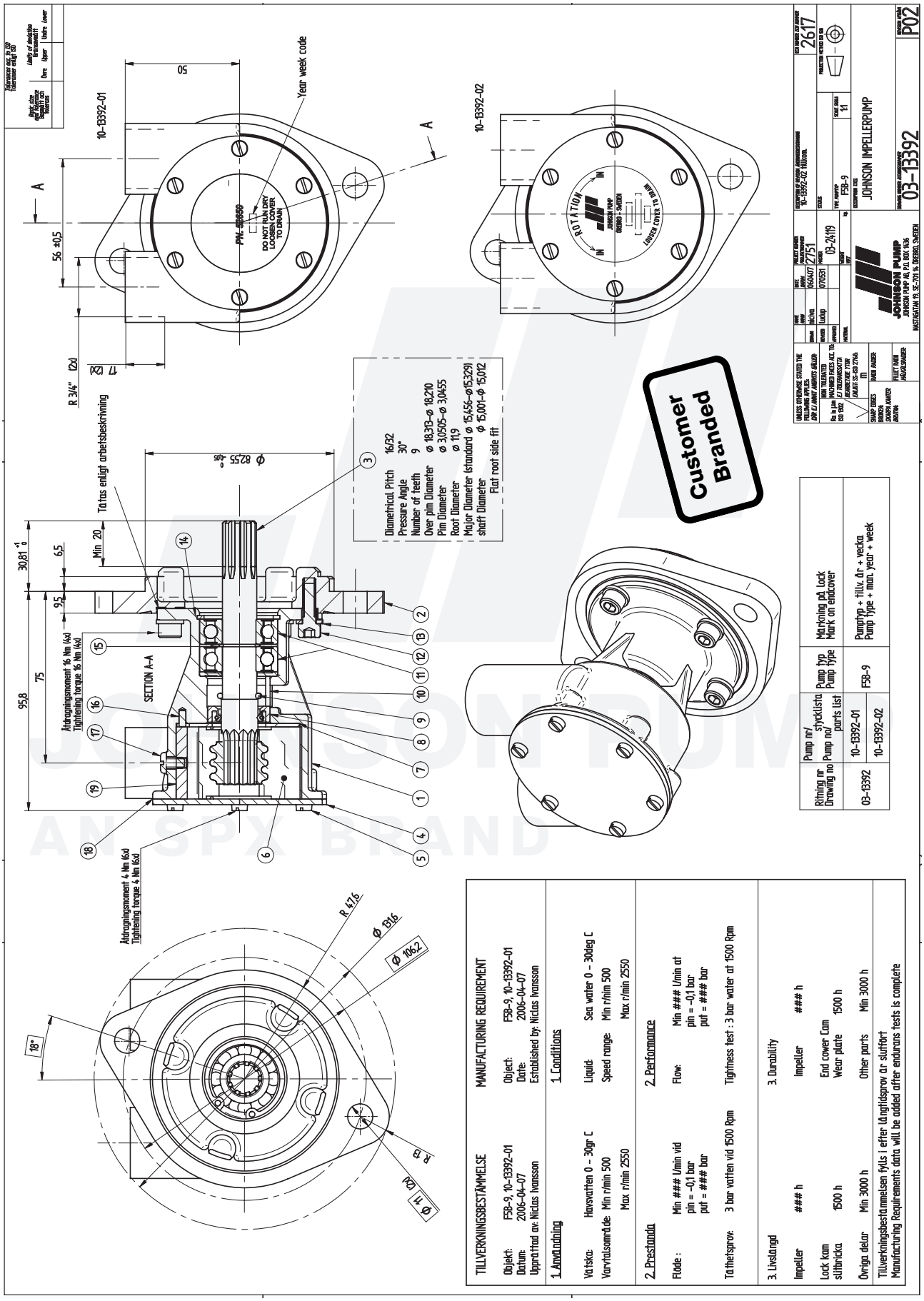

JOHNSON PUMP
AN SPX BRAND

10-22143 pump F5B-9

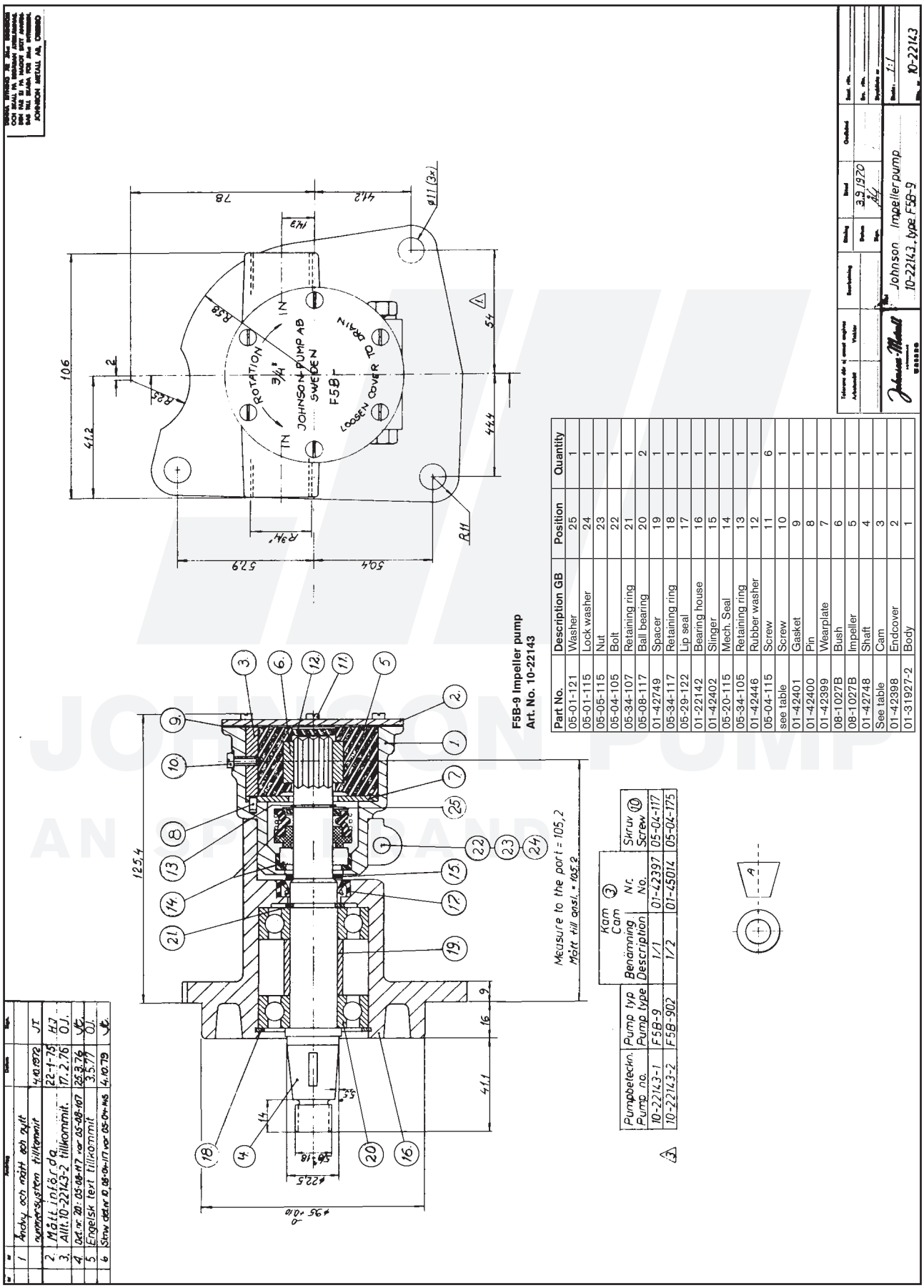

F5B-9 Impeller pump
Art. No. 10-22143

Part No.	Description GB	Position	Quantity
05-01-121	Washer	25	1
05-01-115	Lock washer	24	1
05-05-115	Nut	23	1
05-04-105	Bolt	22	1
05-34-107	Retaining ring	21	1
05-08-117	Ball bearing	20	2
01-42749	Spacer	19	1
05-34-117	Retaining ring	18	1
05-29-122	Lip seal	17	1
01-22142	Bearing house	16	1
01-42402	Slinger	15	1
05-20-115	Mech. Seal	14	1
05-34-105	Retaining ring	13	1
01-42446	Rubber washer	12	1
05-04-115	Screw	11	6
see table	Screw	10	1
01-42401	Gasket	9	1
01-42400	Pin	8	1
01-42399	Wearplate	7	1
08-1027B	Bush	6	1
08-1027B	Impeller	5	1
01-42748	Shaft	4	1
See table	Cam	3	1
01-42398	Endcover	2	1
01-31927-2	Body	1	1

Pumpbeteckn. Pump no.	Pump typ Pump type	Kam Cam ③ Benämning Description	Nr. No.	Skruv ⑩ Screw
10-22143-1	F5B-9	1/1	01-42397	05-04-117
10-22143-2	F5B-902	1/2	01-45014	05-04-175

The product, i.e. concept, design and construction, is the property of SPX Johnson Pump Marine AB

10-22355 pump F5B-9

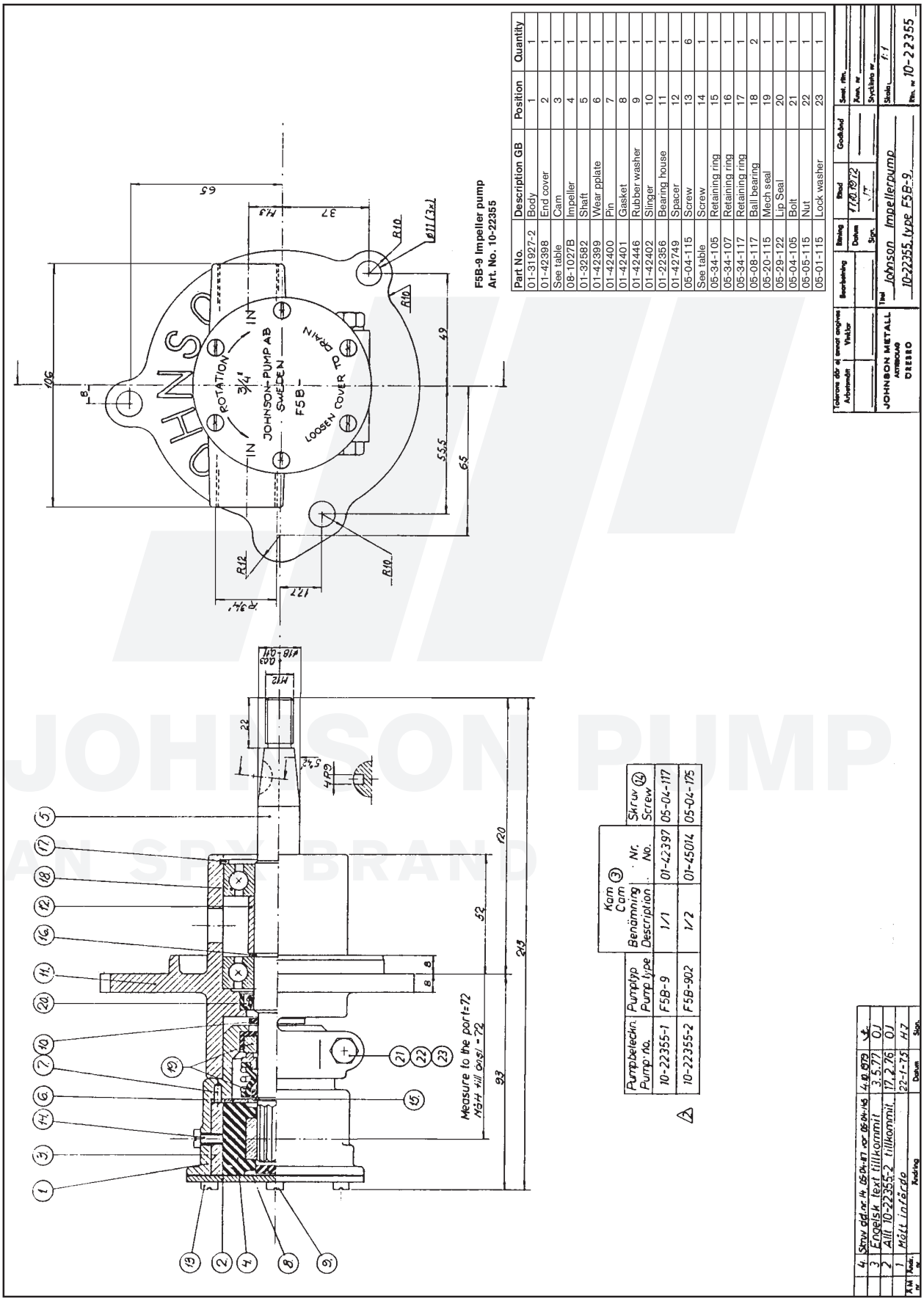

F5B-9 Impeller pump
Art. No. 10-22355

Part No.	Description GB	Position	Quantity
01-31927-2	Body	1	1
01-42398	End cover	2	1
See table	Cam	3	1
08-1027B	Impeller	4	1
01-32582	Shaft	5	1
01-42399	Wear pplate	6	1
01-42400	Pin	7	1
01-42401	Gasket	8	1
01-42446	Rubber washer	9	1
01-42402	Slinger	10	1
01-22356	Bearing house	11	1
01-42749	Spacer	12	1
05-04-115	Screw	13	6
See table	Screw	14	1
05-34-105	Retaining ring	15	1
05-34-107	Retaining ring	16	1
05-34-117	Retaining ring	17	1
05-08-117	Ball bearing	18	2
05-20-115	Mech seal	19	1
05-29-122	Lip Seal	20	1
05-04-105	Bolt	21	1
05-05-115	Nut	22	1
05-01-115	Lock washer	23	1

Pumpbeteckn. Pump no.	Pumptyp Pump type	Kam Cam ③ Benämning Description	Nr. No.	Skruv ⑭ Screw
10-22355-1	F5B-9	1/1	01-42397	05-04-117
10-22355-2	F5B-902	1/2	01-45014	05-04-175

JOHNSON PUMP
AN SPX BRAND

10-24015 pump F5B-9

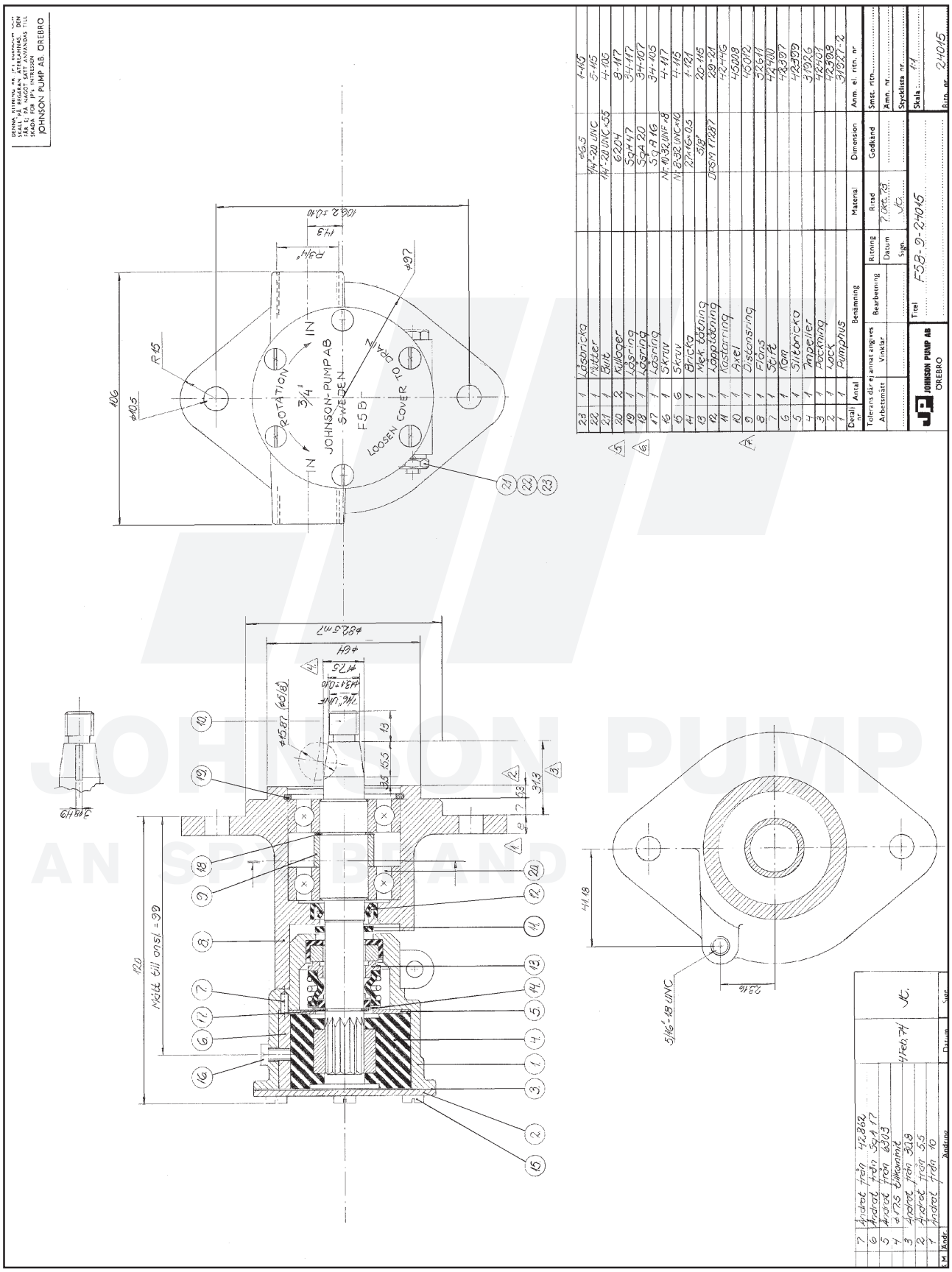

JOHNSON PUMP
AN SPX BRAND

The product, i.e. concept, design and construction, is the property of SPX Johnson Pump Marine AB

10-24035 pump F5B-9

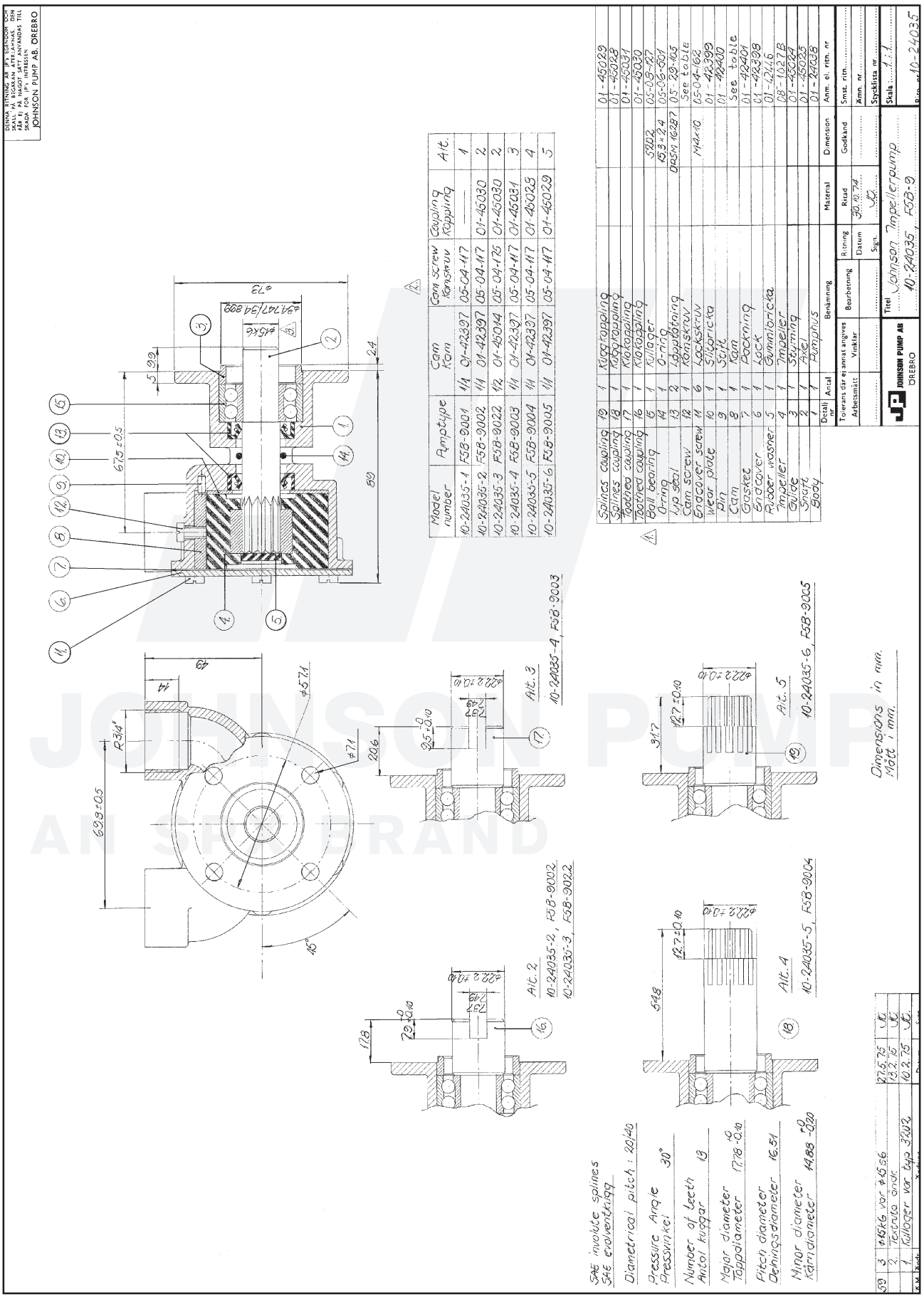

JOHNSON PUMP AN SPX BRAND

10-24053 pump F5B-9

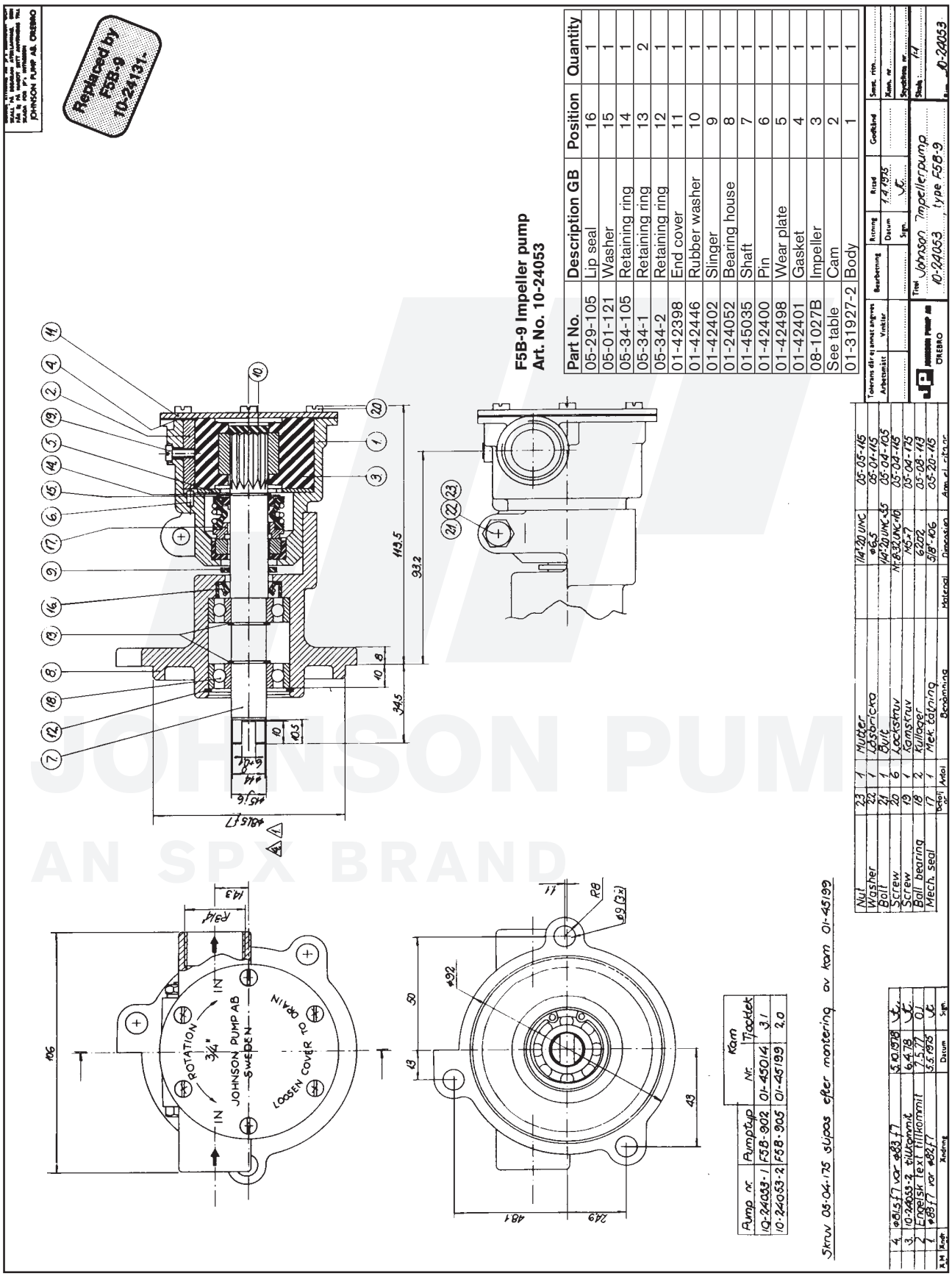

F5B-9 Impeller pump
Art. No. 10-24053

Part No.	Description GB	Position	Quantity
05-29-105	Lip seal	16	1
05-01-121	Washer	15	1
05-34-105	Retaining ring	14	1
05-34-1	Retaining ring	13	2
05-34-2	Retaining ring	12	1
01-42398	End cover	11	1
01-42446	Rubber washer	10	1
01-42402	Slinger	9	1
01-24052	Bearing house	8	1
01-45035	Shaft	7	1
01-42400	Pin	6	1
01-42498	Wear plate	5	1
01-42401	Gasket	4	1
08-1027B	Impeller	3	1
See table	Cam	2	1
01-31927-2	Body	1	1

Pump nr.	Pumptyp	Kam Nr.	Tjocktek
10-24053-1	F5B-902	01-45014	3.1
10-24053-2	F5B-905	01-45199	2.0

JOHNSON PUMP
AN SPX BRAND

The product, i.e. concept, design and construction, is the property of SPX Johnson Pump Marine AB

10-24085 pump F5B-9

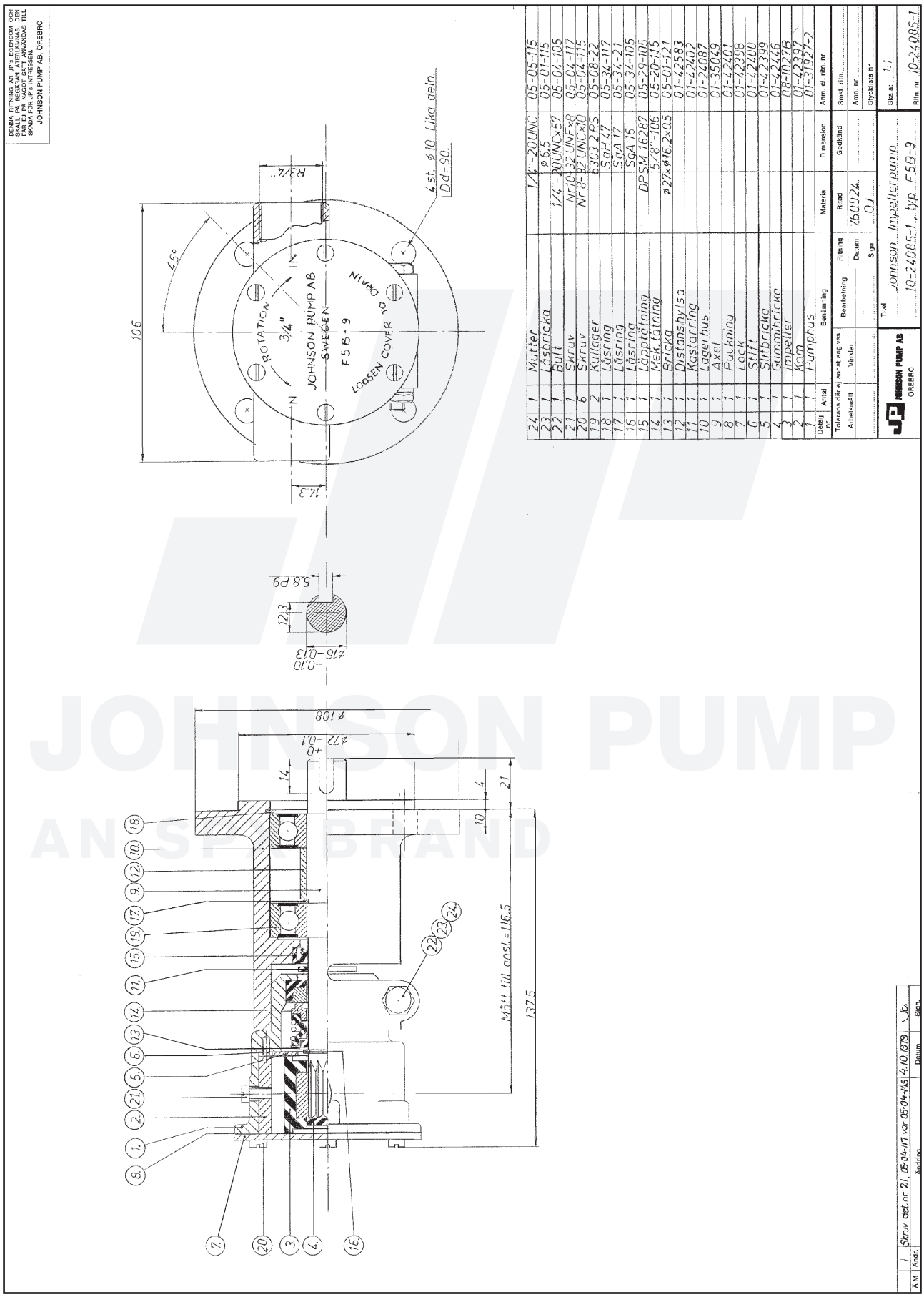

JOHNSON PUMP
ANSPÄRBRAND

10-24086 pump F5B-9

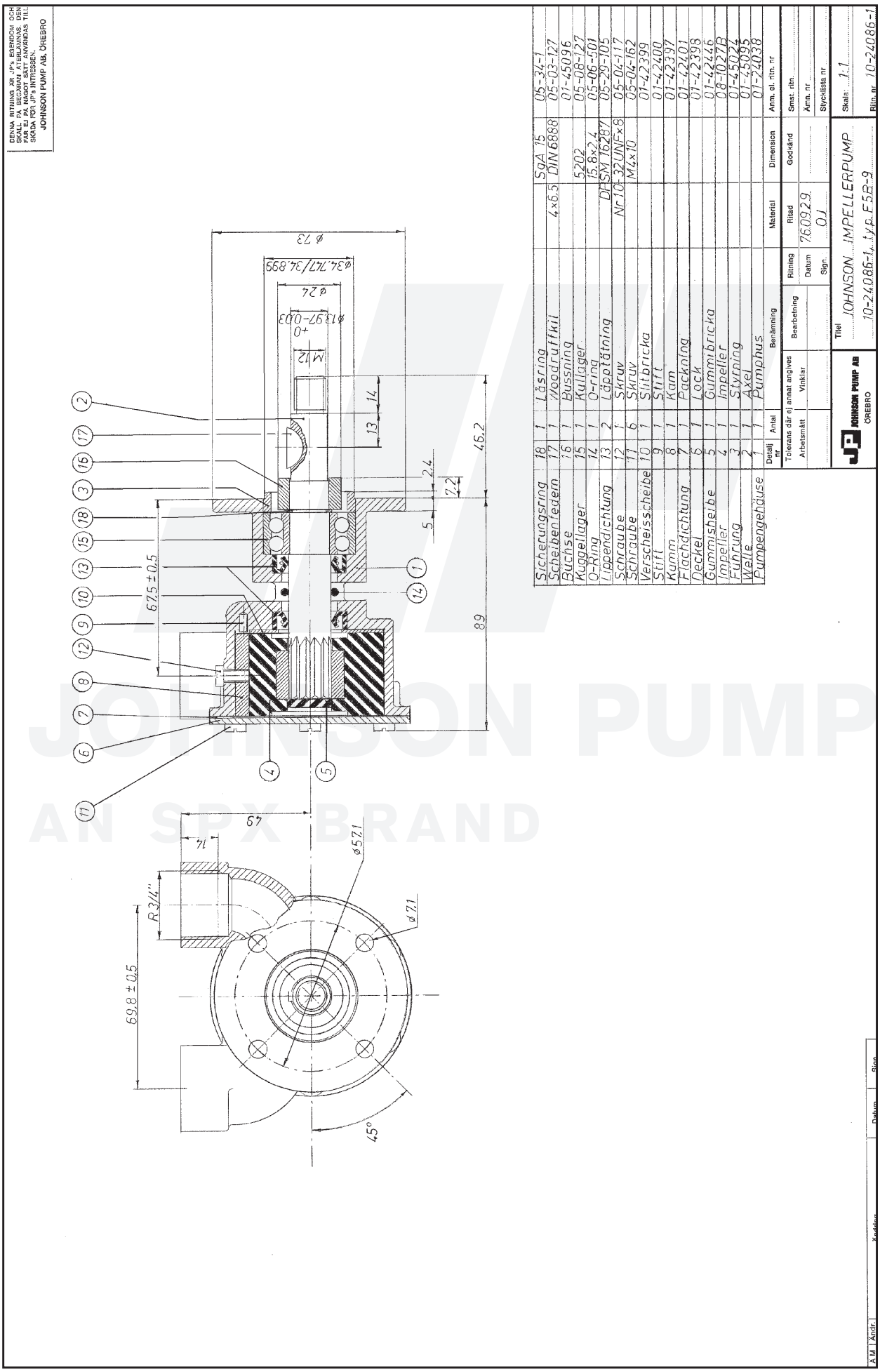

JOHNSON PUMP
AN SPX BRAND

The product, i.e. concept, design and construction, is the property of SPX Johnson Pump Marine AB

10-24100 pump F5B-9

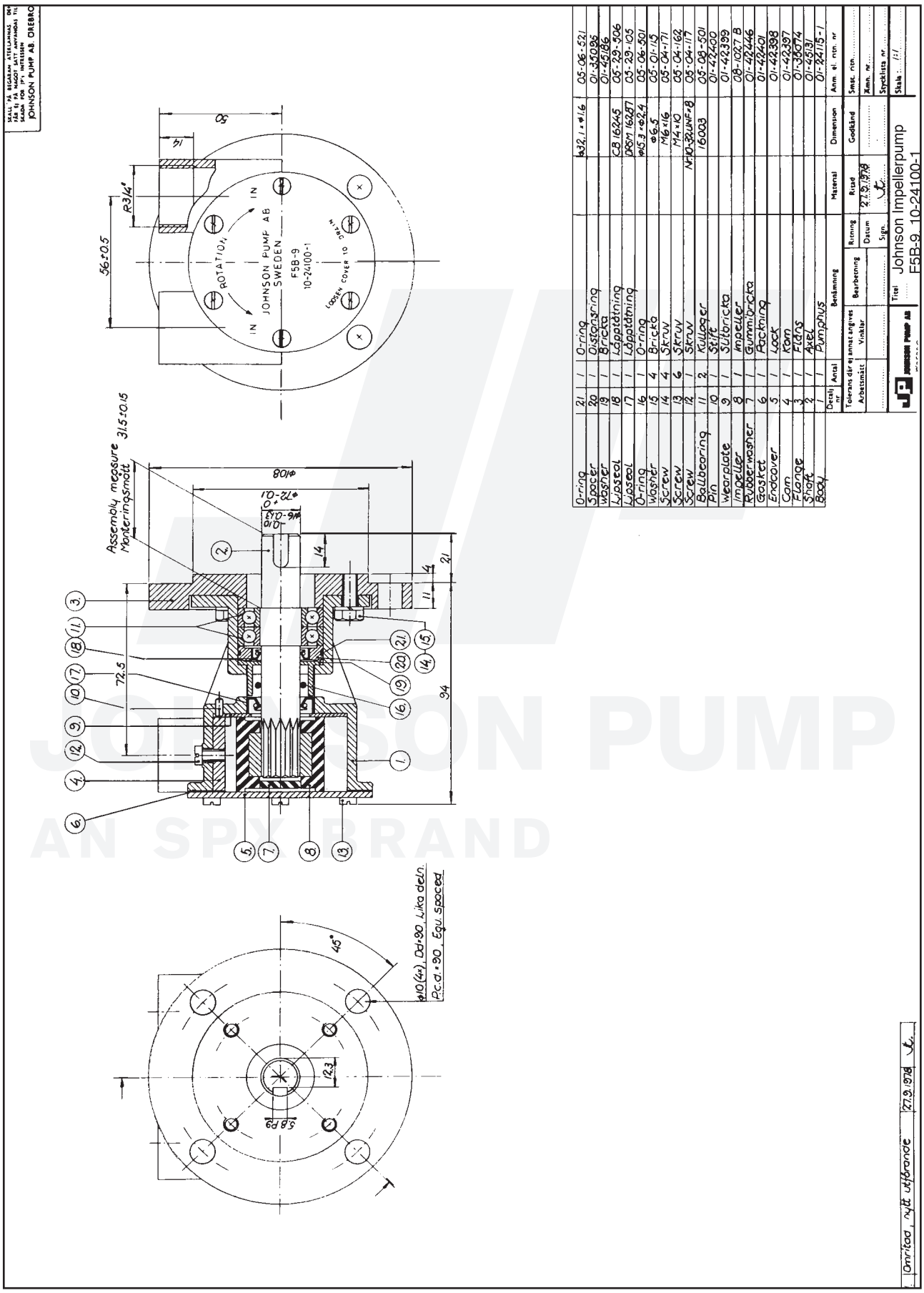

Detalj nr	Antal	Benämning	Material	Dimension	Anm. el. rtn. nr
21	1	O-ring		Ø32,1×Ø1,6	05-06-521
20	1	Distansring			01-35096
19	1	Bricka			01-46186
18	1	Läppätning	CB 16245		05-29-306
17	1	Läppätning	DSN 16287		05-29-105
16	1	O-ring	Ø15,3×Ø2,4		05-06-501
15	4	Bricka	Ø6,5		05-01-115
14	4	Skruv	M6×16		05-04-171
13	6	Skruv	M4×10		05-04-162
12	1	Skruv	N:10-32UNF-B		05-04-117
11	2	Kullager	16003		05-08-501
10	1	Stift			01-42400
9	1	Slitbricka			01-42399
8	1	Impeller			08-1027 B
7	1	Gummibricka			01-42446
6	1	Packning			01-42401
5	1	Lock			01-42398
4	1	Kam			01-42397
3	1	Flens			01-38074
2	1	Axel			01-45131
1	1	Pumphus			01-24115-1

Tolerans där ej annat anges: Arbetsmått / Vinklar
Bearbetning / Ritning / Datum / Sign.
Ritad 27.9.1978
Godkänd
Smst. rtn.
Ämn. nr
Specklista nr
JOHNSON PUMP AB

JOHNSON PUMP
AN SPX BRAND

10-24119 pump F5B-9

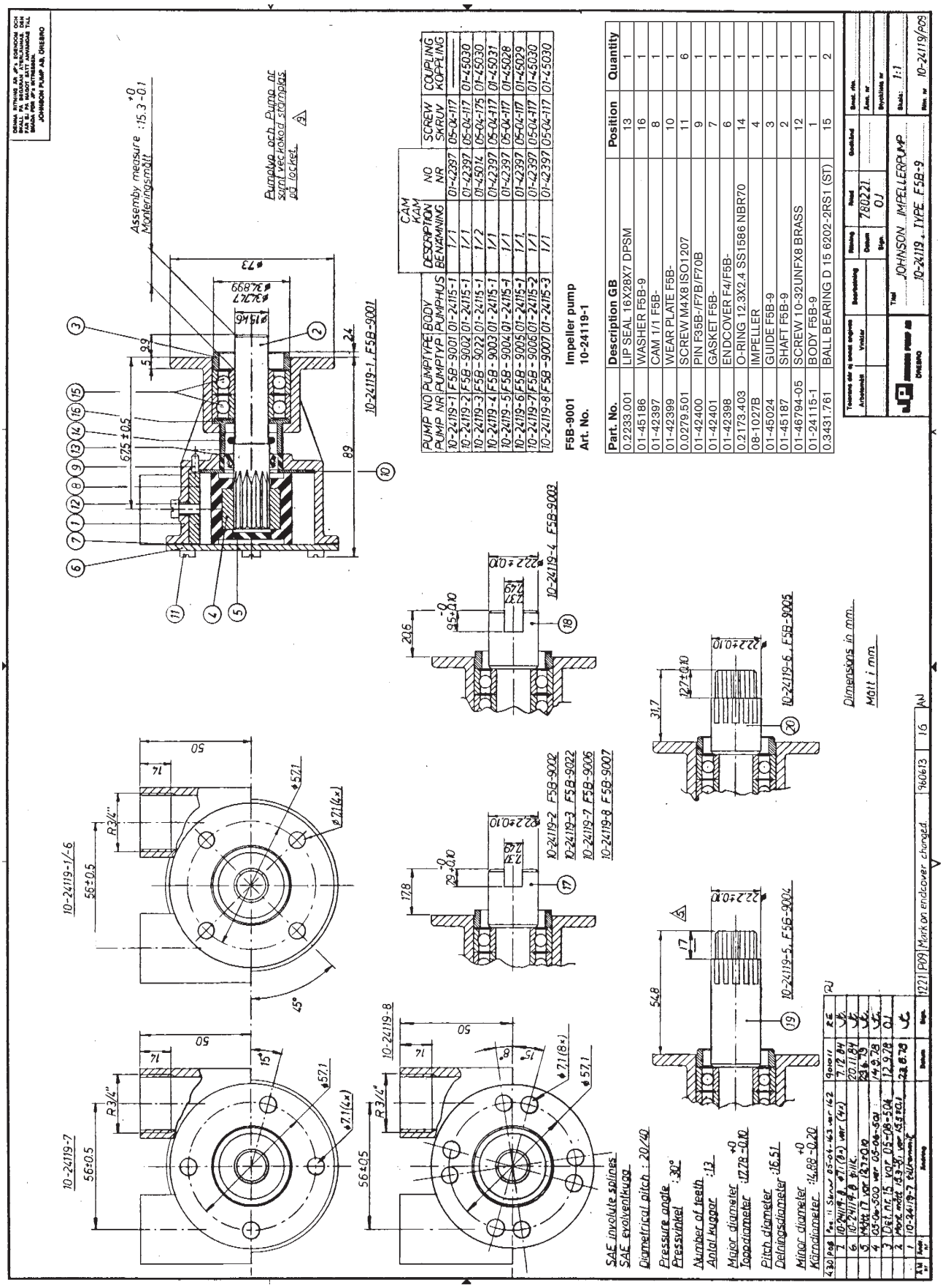

PUMP NO PUMP NR	PUMPTYPE PUMPTYP	BODY PUMPHUS	DESCRIPTION BENÄMNING	CAM KAM NO NR	SCREW SKRUV	COUPLING KOPPLING
10-24119-1	F5B-9001	01-24115-1	1/1	01-42397	05-04-117	———
10-24119-2	F5B-9002	01-24115-1	1/1	01-42397	05-04-117	01-45030
10-24119-3	F5B-9022	01-24115-1	1/2	01-45014	05-04-175	01-45030
10-24119-4	F5B-9003	01-24115-1	1/1	01-42397	05-04-117	01-45031
10-24119-5	F5B-9004	01-24115-4	1/1	01-42397	05-04-117	01-45028
10-24119-6	F5B-9005	01-24115-1	1/1	01-42397	05-04-117	01-45029
10-24119-7	F5B-9006	01-24115-2	1/1	01-42397	05-04-117	01-45030
10-24119-8	F5B-9007	01-24115-3	1/1	01-42397	05-04-117	01-45030

F5B-9001 Impeller pump
Art. No. 10-24119-1

Part. No.	Description GB	Position	Quantity
0.2233.001	LIP SEAL 16X28X7 DPSM	13	1
01-45186	WASHER F5B-9	16	1
01-42397	CAM 1/1 F5B-	8	1
01-42399	WEAR PLATE F5B-	10	1
0.0279.501	SCREW M4X8 ISO1207	11	6
01-42400	PIN F35B-/F7B/F70B	9	1
01-42401	GASKET F5B-	7	1
01-42398	ENDCOVER F4/F5B-	6	1
0.2173.403	O-RING 12.3X2.4 SS1586 NBR70	14	1
08-1027B	IMPELLER	4	1
01-45024	GUIDE F5B-9	3	1
01-45187	SHAFT F5B-9	2	1
01-46794-05	SCREW 10-32UNFX8 BRASS	12	1
01-24115-1	BODY F5B-9	1	1
0.3431.761	BALL BEARING D 15 6202-2RS1 (ST)	15	2

The product, i.e. concept, design and construction, is the property of SPX Johnson Pump Marine AB

10-24131 pump F5B-9

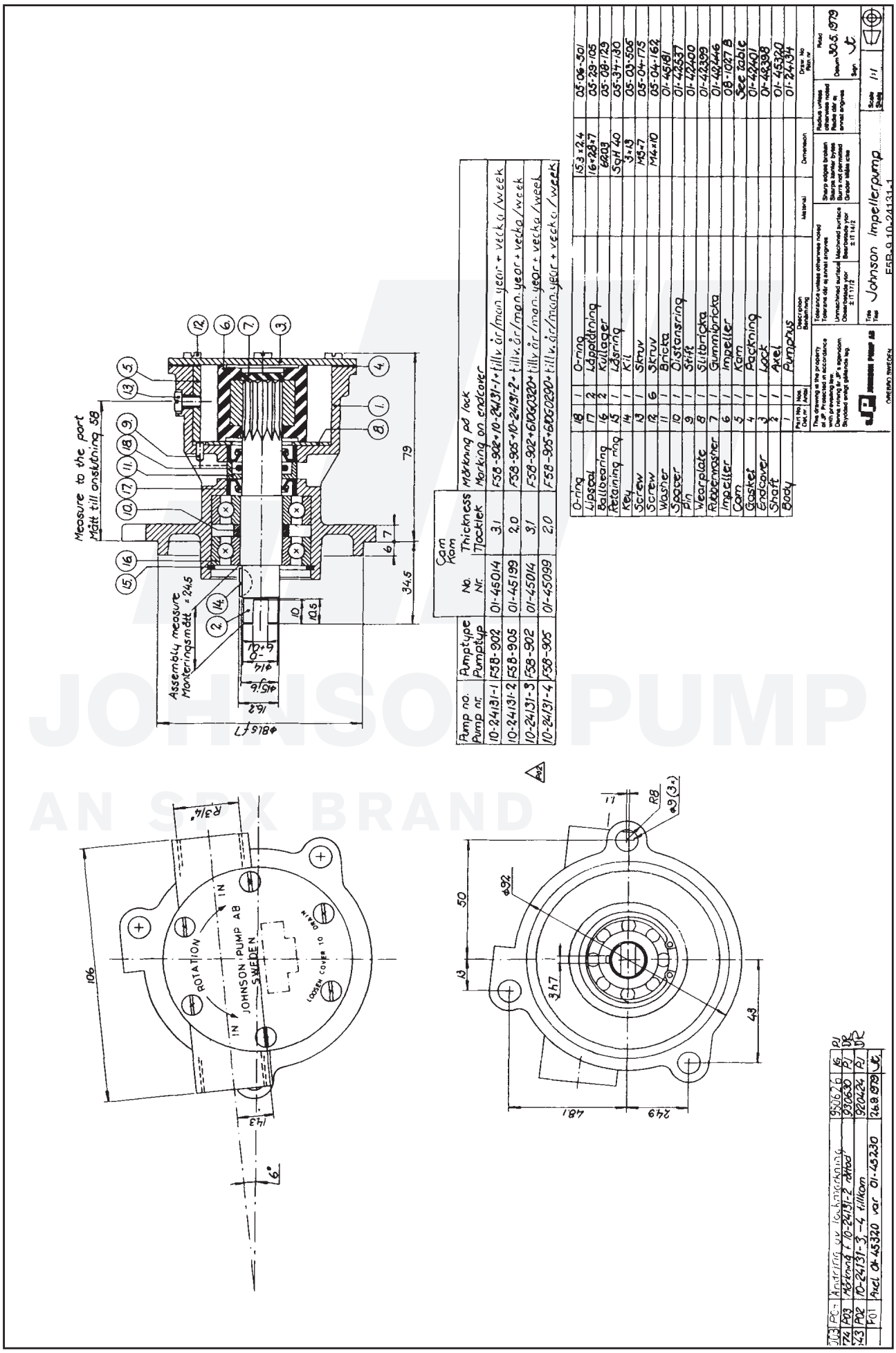

JOHNSON PUMP
AN SPX BRAND

10-24140 pump F5B-9

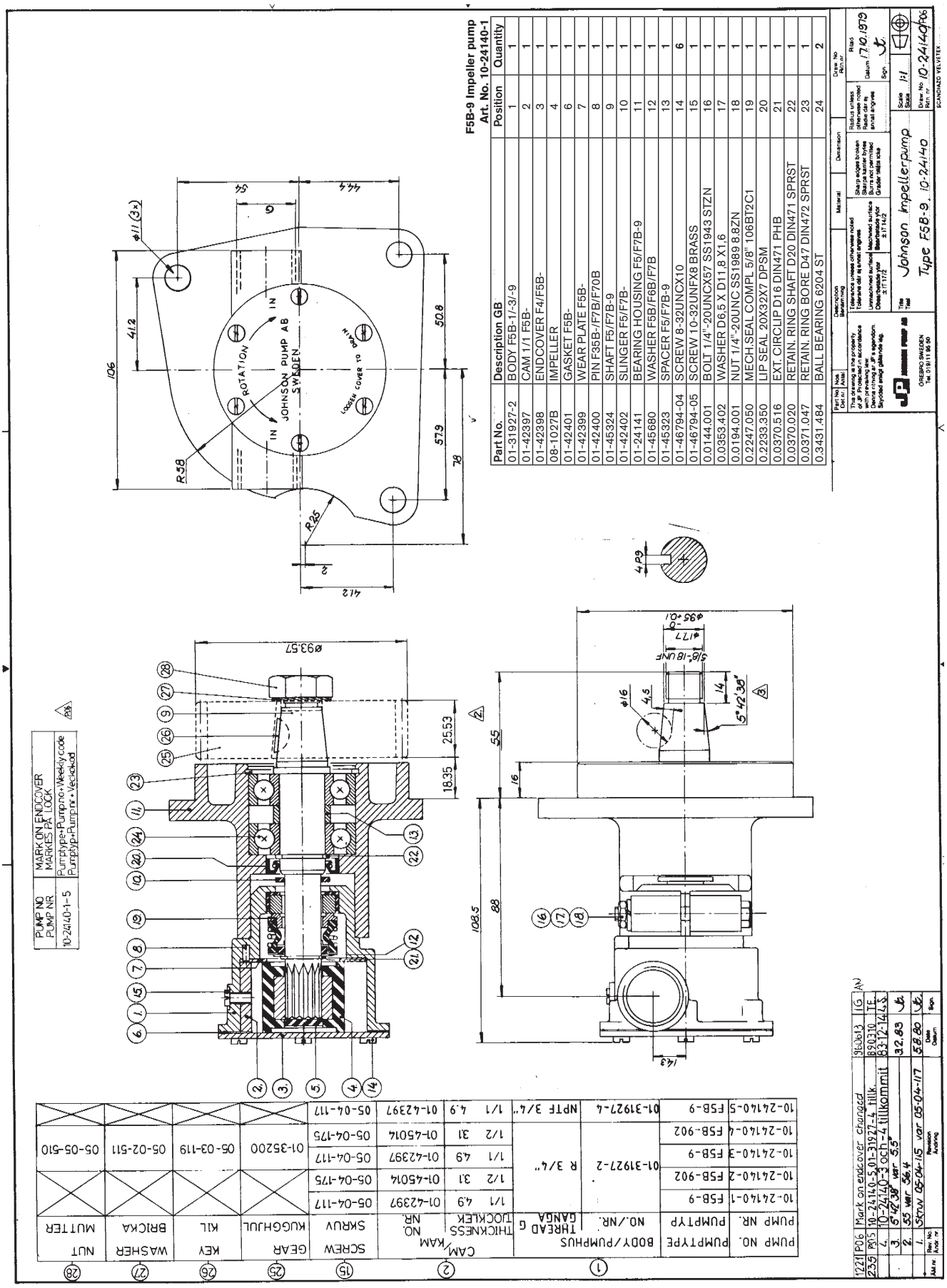

Part No.	Description GB	Position	Quantity
01-31927-2	BODY F5B-1/-3/-9	1	1
01-42397	CAM 1/1 F5B-	2	1
01-42398	ENDCOVER F4/F5B-	3	1
08-1027B	IMPELLER	4	1
01-42401	GASKET F5B-	6	1
01-42399	WEAR PLATE F5B-	7	1
01-42400	PIN F35B-/F7B/F70B	8	1
01-45324	SHAFT F5/F7B-9	9	1
01-42402	SLINGER F5/F7B-	10	1
01-24141	BEARING HOUSING F5/F7B-9	11	1
01-45680	WASHER F5B/F6B/F7B	12	1
01-45323	SPACER F5/F7B-9	13	1
01-46794-04	SCREW 8-32UNCX10	14	6
01-46794-05	SCREW 10-32UNFX8 BRASS	15	1
0.0144.001	BOLT 1/4"-20UNCX57 SS1943 STZN	16	1
0.0353.402	WASHER D6,5 X D11,8 X1,6	17	1
0.0194.001	NUT 1/4"-20UNC SS1989 8.8ZN	18	1
0.2247.050	MECH.SEAL COMPL 5/8" 106BT2C1	19	1
0.2233.350	LIP SEAL 20X32X7 DPSM	20	1
0.0370.516	EXT. CIRCLIP D16 DIN471 PHB	21	1
0.0370.020	RETAIN. RING SHAFT D20 DIN471 SPRST	22	1
0.0371.047	RETAIN. RING BORE D47 DIN472 SPRST	23	1
0.3431.484	BALL BEARING 6204 ST	24	2

PUMP NO. / PUMP NR.	PUMPTYPE / NO./NR.	BODY/PUMPHUS THREAD GANGA	CAM/KAM THICKNESS	CAM/KAM NO. NR.	SCREW SKRUV	GEAR KUGGHJUL	KEY KIL	WASHER BRICKA	NUT MUTTER
10-24140-5	F5B-9	01-31927-4 NPTF 3/4"	1/1	4.9	01-42397	05-04-117			
10-24140-4	F5B-902	R 3/4"	1/2	31	01-45014	05-04-175			
10-24140-3	F5B-9	01-31927-2	1/1	4.9	01-42397	05-04-117	01-35200	05-03-119	05-02-511	05-05-510
10-24140-2	F5B-902		1/2	31	01-45014	05-04-175				
10-24140-1	F5B-9		1/1	4.9	01-42397	05-04-117				

1221	P06	Mark on endcover changed	960613	JG	AN
235	P015	10-24140-5 01-31927-4 tillk	890210	TE	
		4. 10-24140-3 och-4 tillkommit	831212	LGS	
		3. 6°42'38" var 5,5°	32.83		
		2. 55 var 56,4	58.80		
		1. SKJUV 05-04-115 var 05-04-117	Date Datum	Sign.	
Rev. No. Ändr. nr			Revision Ändring		

The product, i.e. concept, design and construction, is the property of SPX Johnson Pump Marine AB

10-24174 pump F5B-9

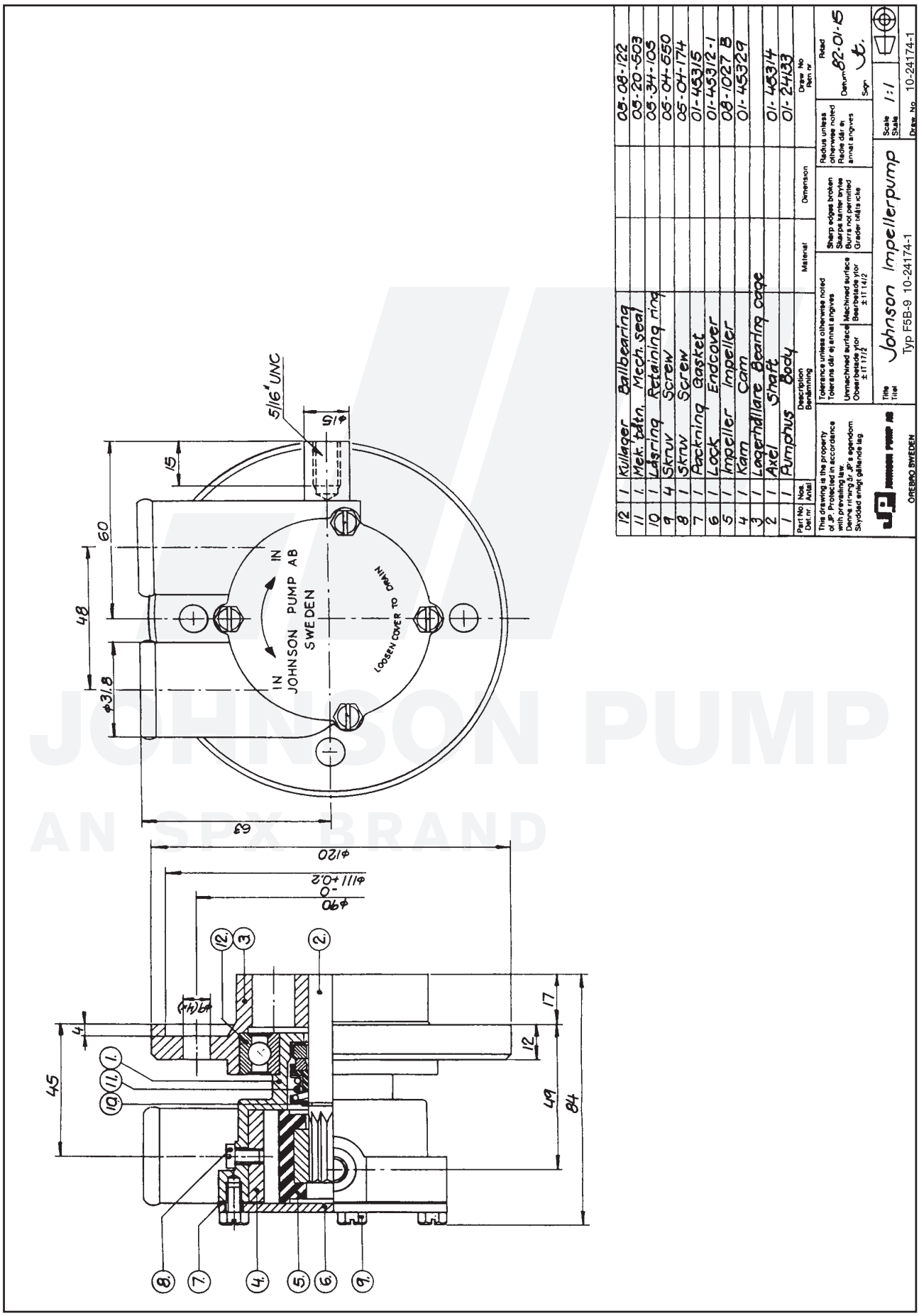

JOHNSON PUMP
AN SPX BRAND

10-24184 pump F5B-9

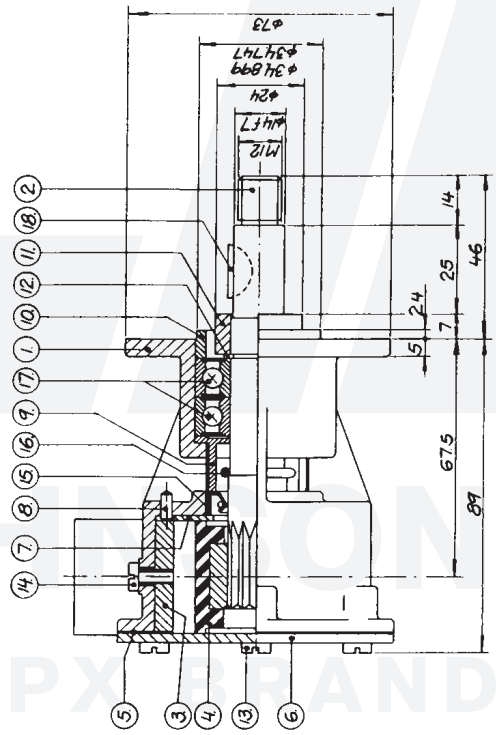

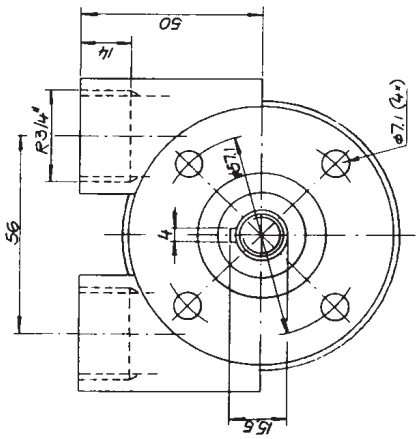

Pos. No.	Nos.	Benämning / Description	Material	Dimension / Mass
18	1	Kil — Key		05-03-127
17	2	Kullager — Ballbearing		05-08-123
16	1	O-ring — O-ring		05-06-500
15	1	Läppätätn. — Lipseal		05-24-105
14	1	Skruv — Screw		05-04-117
13	6	Skruv — Screw		05-04-162
12	1	Låsring — Retaining ring		05-34-1
11	1	Bussning — Bushing		01-45096
10	1	Styrning — Guide		01-45024
9	1	Brickä — Washer		01-45186
8	1	Stift — Pin		01-42400
7	1	Slitbricka — Wear plate		01-42399
6	1	Lock — Endcover		01-42398
5	1	Packning — Gasket		01-42401
4	1	Impeller — Impeller		08-1027 B
3	1	Kam — Cam		01-42397
2	1	Axel — Shaft		01-46553
1	1	Pumphus — Body		01-24115-1

Johnson Pump AB

Johnson Impellerpump
10-24184-1

Scale 1:1

82-03-16

JOHNSON PUMP
AN SPX BRAND

The product, i.e. concept, design and construction, is the property of SPX Johnson Pump Marine AB

10-24215 pump F5B-9

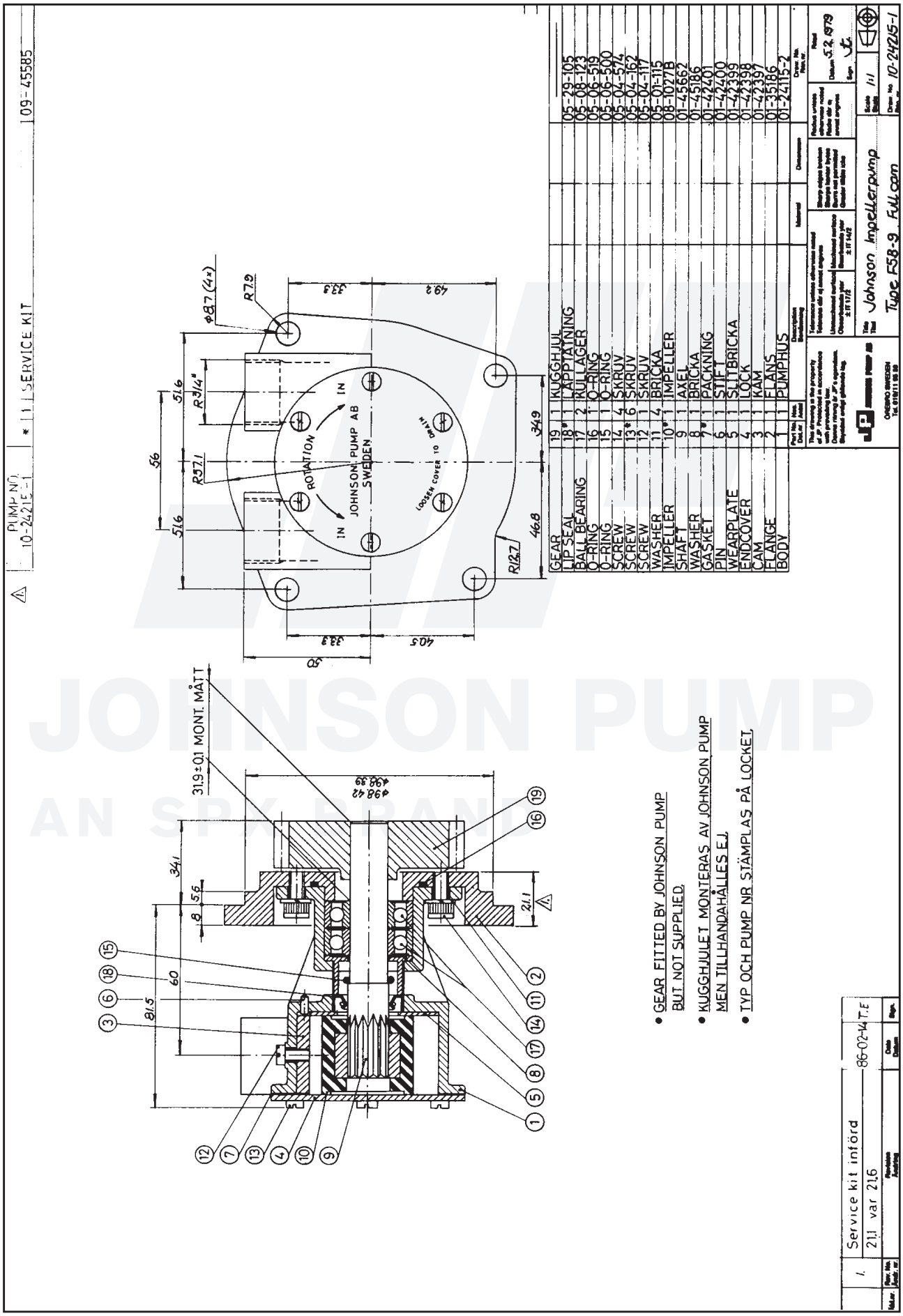

Pos	Antal	Benämning	Material	Dimension	Ritn. nr
19	1	KUGGHJUL			05-29-105
18*	1	LÄPPTÄTNING			05-08-123
17	2	KULLAGER			05-06-519
16	1	O-RING			05-06-500
15	1	O-RING			05-04-574
14	4	SKRUV			05-04-162
13*	6	SKRUV			05-04-117
12	1	SKRUV			05-01-115
11	4	BRICKA			08-1027B
10*	1	IMPELLER			01-45662
9	1	AXEL			01-45186
8	1	BRICKA			01-42401
7*	1	PACKNING			01-42400
6	1	STIFT			01-42399
5	1	SLITBRICKA			01-42398
4	1	LOCK			01-42397
3	1	KAM			01-35186
2	1	FLANS			01-24115-2
1	1	PUMPHUS			

JOHNSON PUMP
AN SPX BRAND

10-24268 pump F5B-9

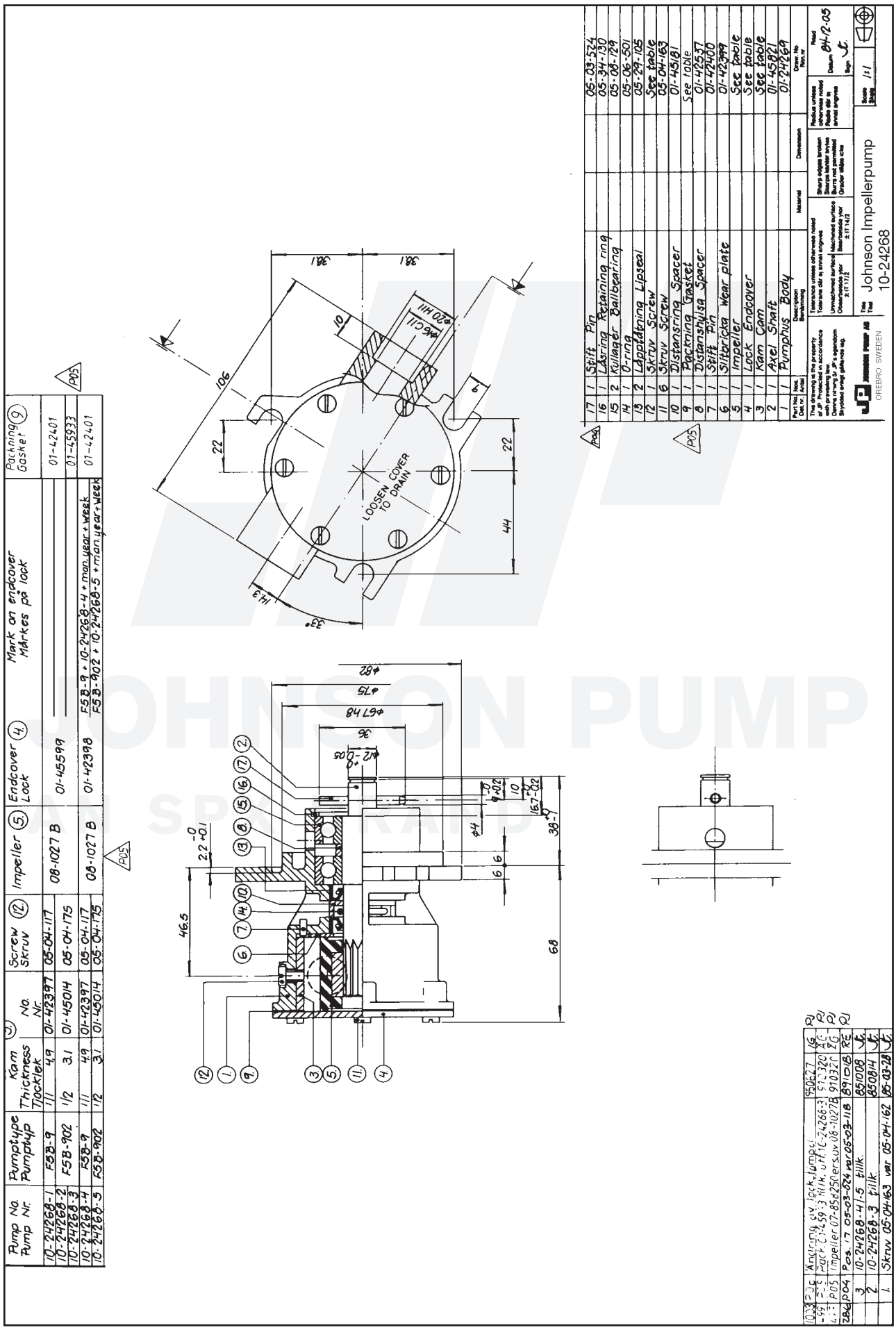

The product, i.e. concept, design and construction, is the property of SPX Johnson Pump Marine AB

10-24318 pump F5B-905

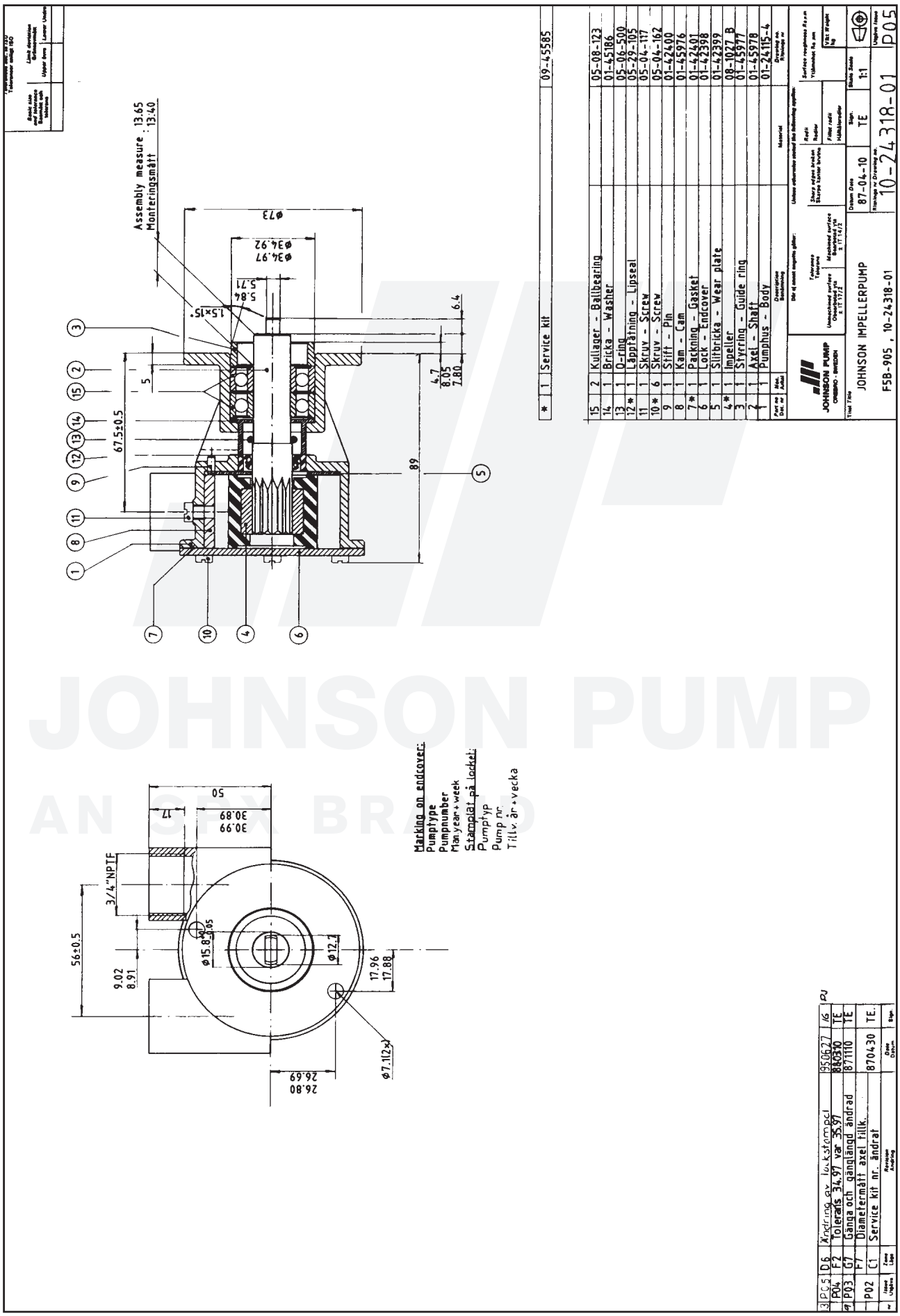

JOHNSON PUMP
AN SPX BRAND

10-24325 pump F5B-9

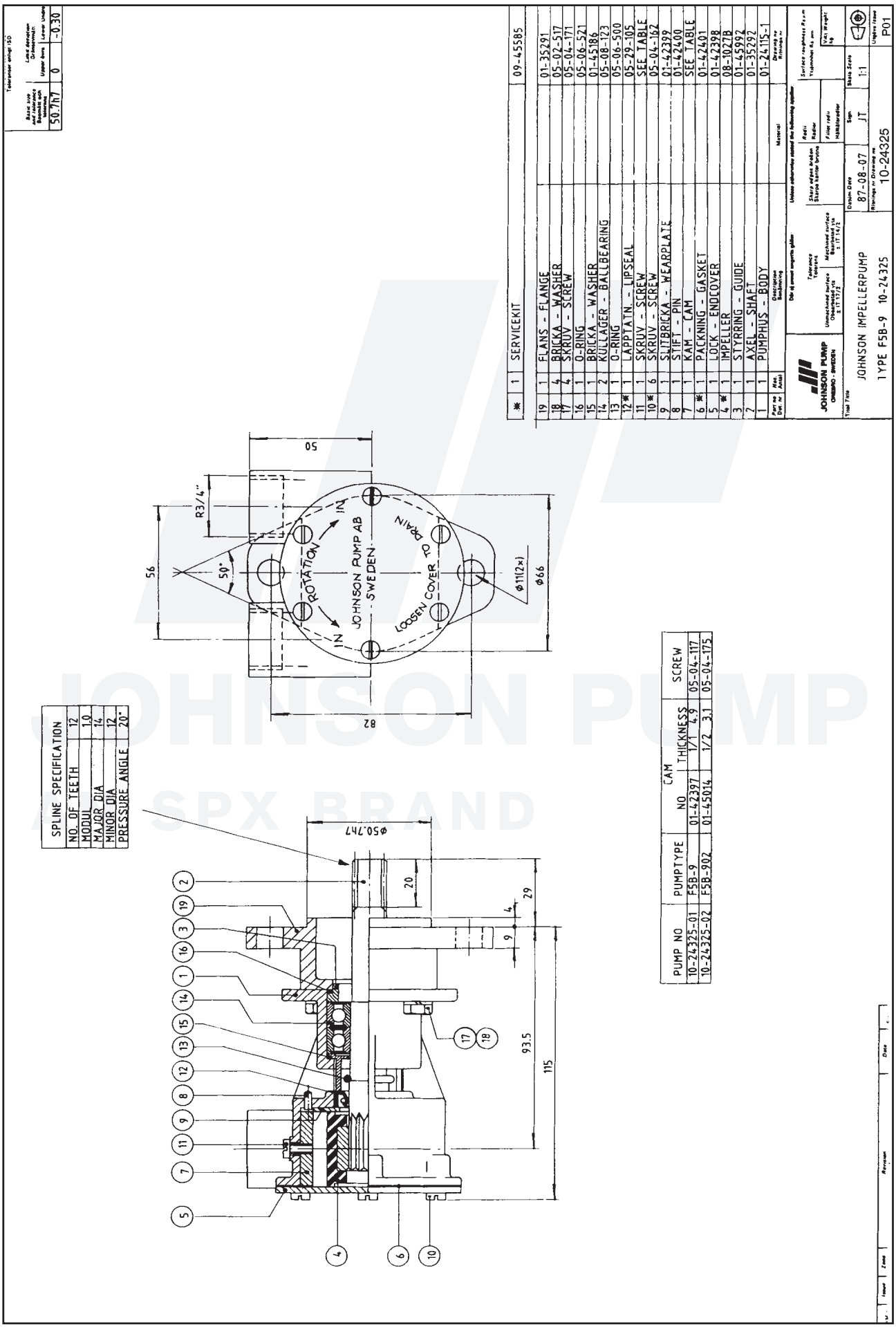

*	1	SERVICEKIT	09-45585
19	1	FLANS - FLANGE	01-35291
18	4	BRICKA - WASHER	05-02-517
17	4	SKRUV - SCREW	05-04-171
16	1	O-RING	05-06-521
15	1	BRICKA - WASHER	01-45186
14	2	KULLAGER - BALLBEARING	05-08-123
13	1	O-RING	05-06-500
12*	1	LAPPTATN. - LIPSEAL	05-29-105
11	1	SKRUV - SCREW	SEE TABLE
10*	6	SKRUV - SCREW	05-04-162
9	1	SLITBRICKA - WEARPLATE	01-42399
8	1	STIFT - PIN	01-42400
7	1	KAM - CAM	SEE TABLE
6*	1	PACKNING - GASKET	01-42401
5	1	LOCK - ENDCOVER	01-42398
4*	1	IMPELLER	08-10278
3	1	STYRRING - GUIDE	01-45992
2	1	AXEL - SHAFT	01-35292
1	1	PUMPHUS - BODY	01-24115-1

SPLINE SPECIFICATION	
NO. OF TEETH	12
MODUL	1.0
MAJOR DIA	14
MINOR DIA	12
PRESSURE ANGLE	20°

PUMP NO	PUMPTYPE	CAM NO	THICKNESS	SCREW
10-24325-01	F5B-9	01-42397	1/1 4.9	05-04-117
10-24325-02	F5B-902	01-45014	1/2 3.1	05-04-175

JOHNSON PUMP
SPX BRAND

The product, i.e. concept, design and construction, is the property of SPX Johnson Pump Marine AB

10-24334 pump F5B-9

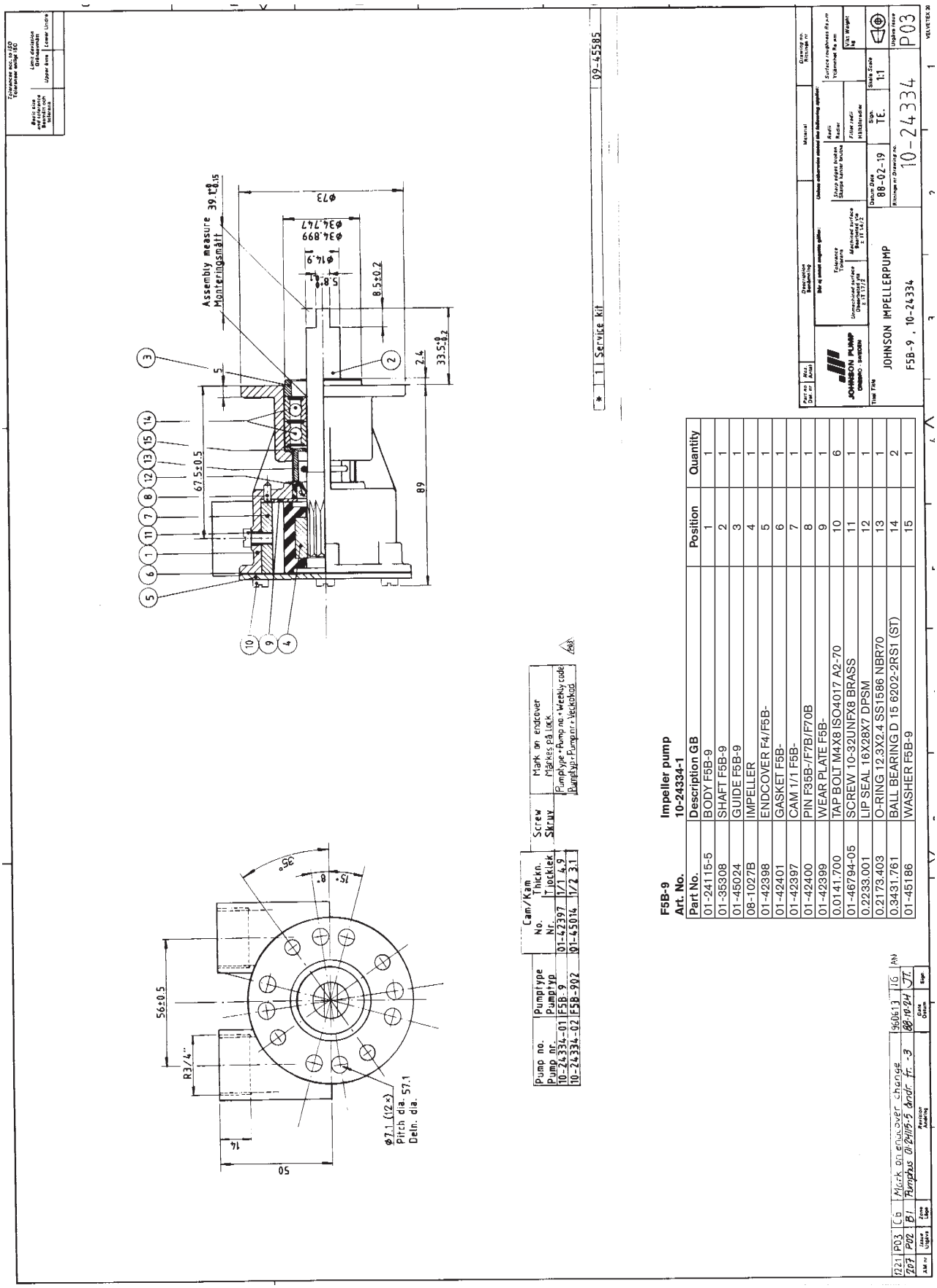

F5B-9
Art. No. **Impeller pump**
10-24334-1

Part No.	Description GB	Position	Quantity
01-24115-5	BODY F5B-9	1	1
01-35308	SHAFT F5B-9	2	1
01-45024	GUIDE F5B-9	3	1
08-1027B	IMPELLER	4	1
01-42398	ENDCOVER F4/F5B-	5	1
01-42401	GASKET F5B-	6	1
01-42397	CAM 1/1 F5B-	7	1
01-42400	PIN F35B-/F7B/F70B	8	1
01-42399	WEAR PLATE F5B-	9	1
0.0141.700	TAP BOLT M4X8 ISO4017 A2-70	10	6
01-46794-05	SCREW 10-32UNFX8 BRASS	11	1
0.2233.001	LIP SEAL 16X28X7 DPSM	12	1
0.2173.403	O-RING 12.3X2.4 SS1586 NBR70	13	1
0.3431.761	BALL BEARING D 15 6202-2RS1 (ST)	14	2
01-45186	WASHER F5B-9	15	1

F5B-9 Impeller pump

Art.. No. 10-24372

Art. No.	Description	Position	Quantity
01-24447-1	BODY F5B-9	1	1
04-46238	BEARING HOUSING CPL	2	1
08-1027B	IMPELLER	4	1
01-45312-4	ENDCOVER F5B-9	5	1
01-45315	GASKET F5B/F6B-9	6	1
0.0141.502	SCREW M5X8 DIN933SLOTTED BRASS	8	4
0.2233.001	LIP SEAL 16X28X7 DPSM	9	1
0.3431.754	BALL BEARING 6007 2 RS1 ST	10	1

The product, i.e. concept, design and construction, is the property of SPX Johnson Pump Marine AB

10-24372 pump F5B-9

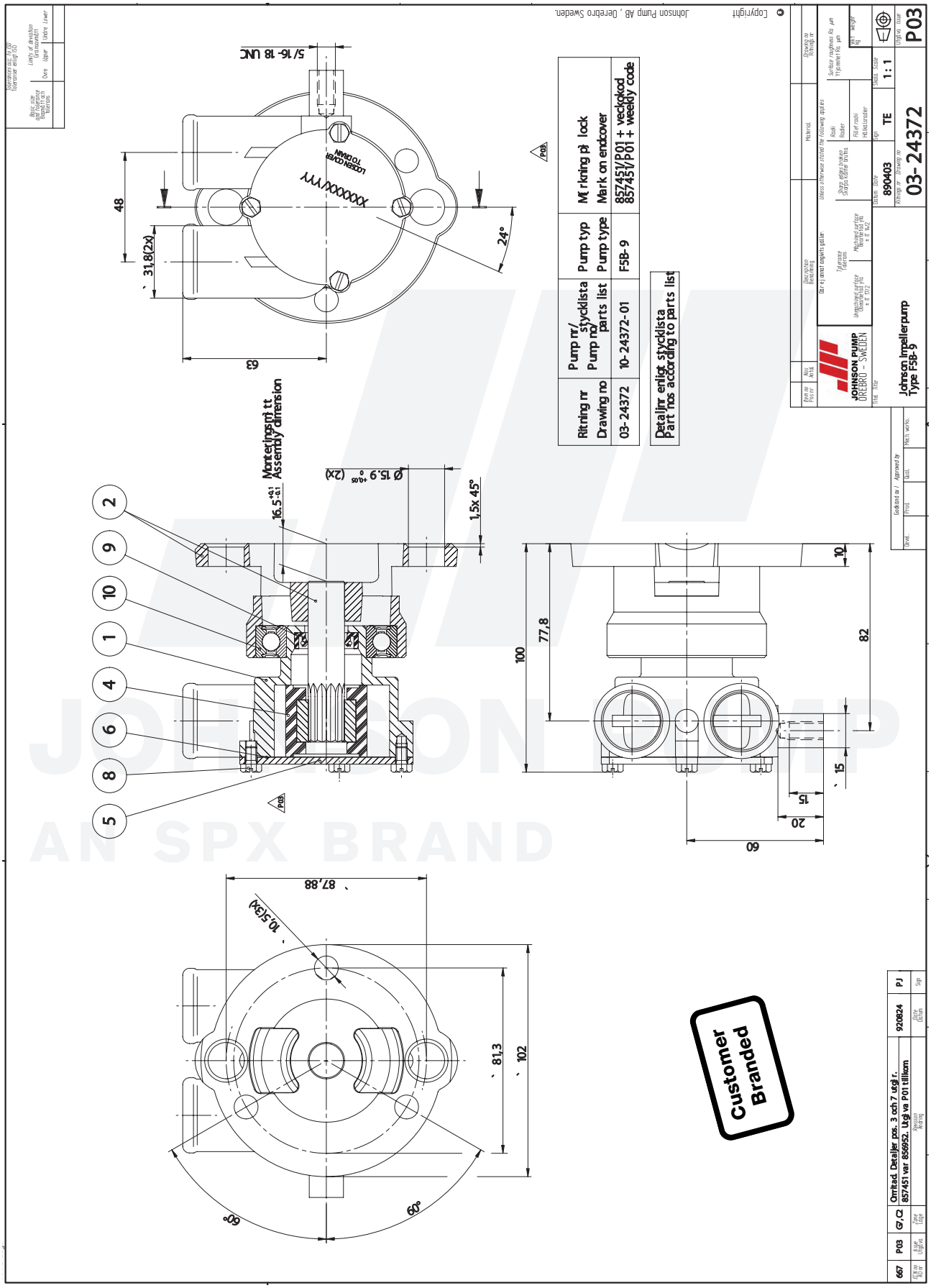

JOHNSON PUMP
AN SPX BRAND

Customer Branded

F5B-9 Impeller pump
Art. No. 10-24451-01

Service Kit No. 09-45583

Part no.	Description GB	Position	Quantity
0.2233.350	LIP SEAL 20X32X7 DPSM	18	1
0.0370.516	EXT. CIRCLIP D16 DIN471 PHB	20	1
0.0370.020	EXT. CIRCLIP D20 DIN471 ST	21	1
0.0371.047	RETAIN. RING BORE D47 DIN472 SPRST	22	1
0.3431.484	BALL BEARING 6204 ST	17	2
01-42401	GASKET F5B-	7	1
01-42397	CAM 1/1 F5B-	8	1
01-42398	ENDCOVER F4/F5B-	5	1
08-1027B	IMPELLER	23	1
0.2247.050	MECH.SEAL COMPL 5/8” 106BT2C1	19	1
01-42399	WEAR PLATE F5B-	6	1
01-42400	PIN F35B-/F7B/F70B	4	1
01-35713	SHAFT F5B/F7B-9	3	1
01-45323	SPACER F5/F7B-9	11	1
01-24446-1	BEARING HOUSING F5B/F7B-9	2	1
01-45680	WASHER F5B/F6B/F7B	10	1
0.0194.001	NUT 1/4”-20UNC SS1989 8.8ZN	16	1
0.0144.001	BOLT 1/4”-20UNCX57 SS1943 STZN	13	1
0.0353.402	WASHER D6,5 X D11,8 X1,6	12	1
01-42402	SLINGER F5/F7B-	9	1
01-46794-05	SCREW 10-32UNFX8 BRASS	14	1
01-31927-2	BODY F5B-1/-3/-9	1	1
01-46794-04	SCREW 8-32UNCX10	15	6

The product, i.e. concept, design and construction, is the property of SPX Johnson Pump Marine AB

10-24451 pump F5B-9

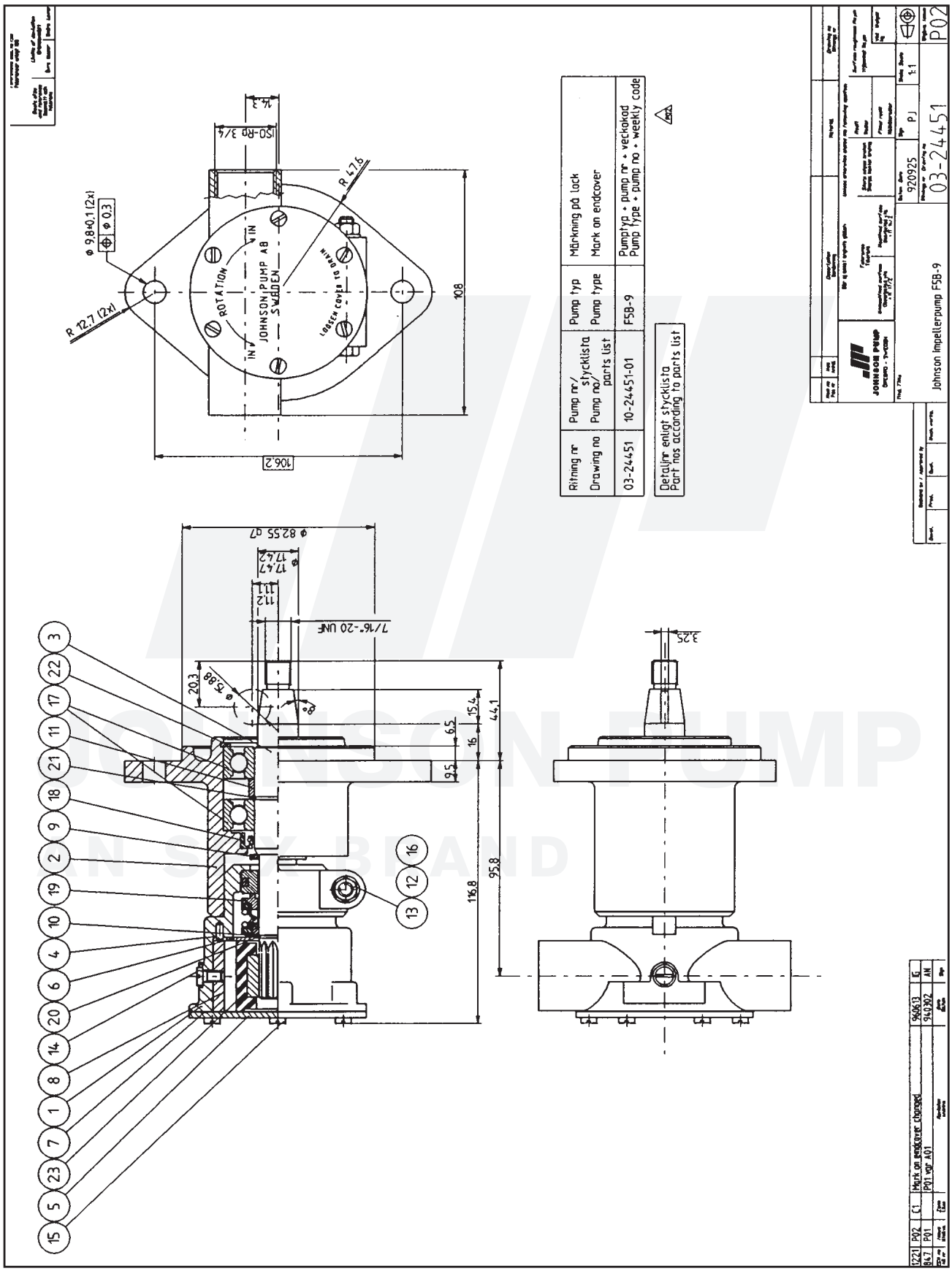

JOHNSON PUMP
AN SPX BRAND

F5B-9 Impeller pump
Art. No. 10-24508-04

Part No.	Description GB	Position	Quantity
19-12967042700	GEAR (YANMAR)	3	1
01-46531	SHAFT F5B-9	4	1
01-46532	WEAR PLATE F5B-9	5	1
01-46535	ENDCOVER F5B/6B	6	1
01-45680	WASHER F5B/F6B/F7B	7	1
0.0141.503	SCREW M5X12 ISO4017 (A4)	8	4
0.0190.001	LOCKNUT M10 DIN6927 8.8	9	1
0.2173.475	O-RING 57.6X2.4 SS1586 NBR70	10	1
0.3431.483	BALL BEARING 6203	11	2
0.2230.015	V-RING 15.5-17.5 NBR/65SH	12	1
0.2247.050	MECH.SEAL COMPL 5/8” 106BT2C1	13	1
0.2233.001	LIP SEAL 16X28X7 DPSM	14	1
0.0370.017	EXT. CIRCLIP D17 DIN471 ST	16	1
0.0370.516	EXT. CIRCLIP D16 DIN471 PHB	17	1
0.0371.040	RETAIN. RING BORE D40 DIN472 SPRST	18	1
08-1027B	IMPELLER	19	1
0.0503.010	WOODRUFKEY 3X3.7X10 DIN6888 ST	20	1
04-46684-02	SUB ASSEMBLY F5B-9	21	1

F5B-9 Impeller pump
Art. No. 10-24508-03

Part No.	Description GB	Position	Quantity
19-12967042700	GEAR (YANMAR)	3	1
01-46531	SHAFT F5B-9	4	1
01-46532	WEAR PLATE F5B-9	5	1
01-46535	ENDCOVER F5B/6B	6	1
0.0141.503	SCREW M5X12 ISO4017 (A4)	8	4
0.0190.001	LOCKNUT M10 DIN6927 8.8	9	1
0.2173.475	O-RING 57.6X2.4 SS1586 NBR70	10	1
0.3431.483	BALL BEARING 6203	11	2
0.2230.015	V-RING 15.5-17.5 NBR/65SH	12	1
0.2233.001	LIP SEAL 16X28X7 DPSM	14	1
0.2233.022	LIP SEAL 16X32X7 DPSM	15	1
0.0370.017	EXT. CIRCLIP D17 DIN471 ST	16	1
0.0371.040	RETAIN. RING BORE D40 DIN472 SPRST	18	1
08-1027B	IMPELLER	19	1
0.0503.010	WOODRUFKEY 3X3.7X10 DIN6888 ST	20	1
04-46684-02	SUB ASSEMBLY F5B-9	21	1

JOHNSON PUMP
AN SPX BRAND

The product, i.e. concept, design and construction, is the property of SPX Johnson Pump Marine AB

10-24508 pump F5B-9

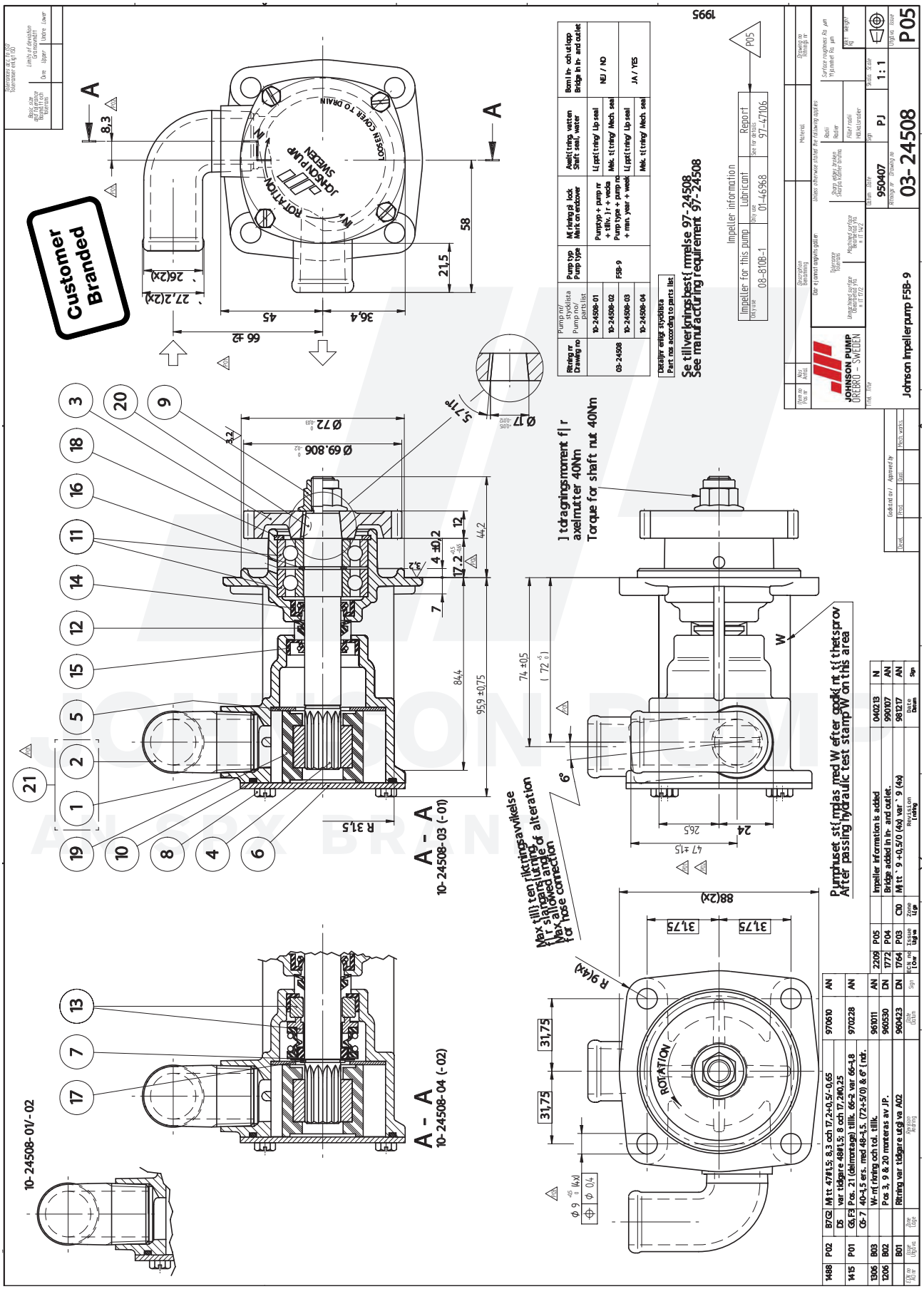

10-32058 pump F5B-9

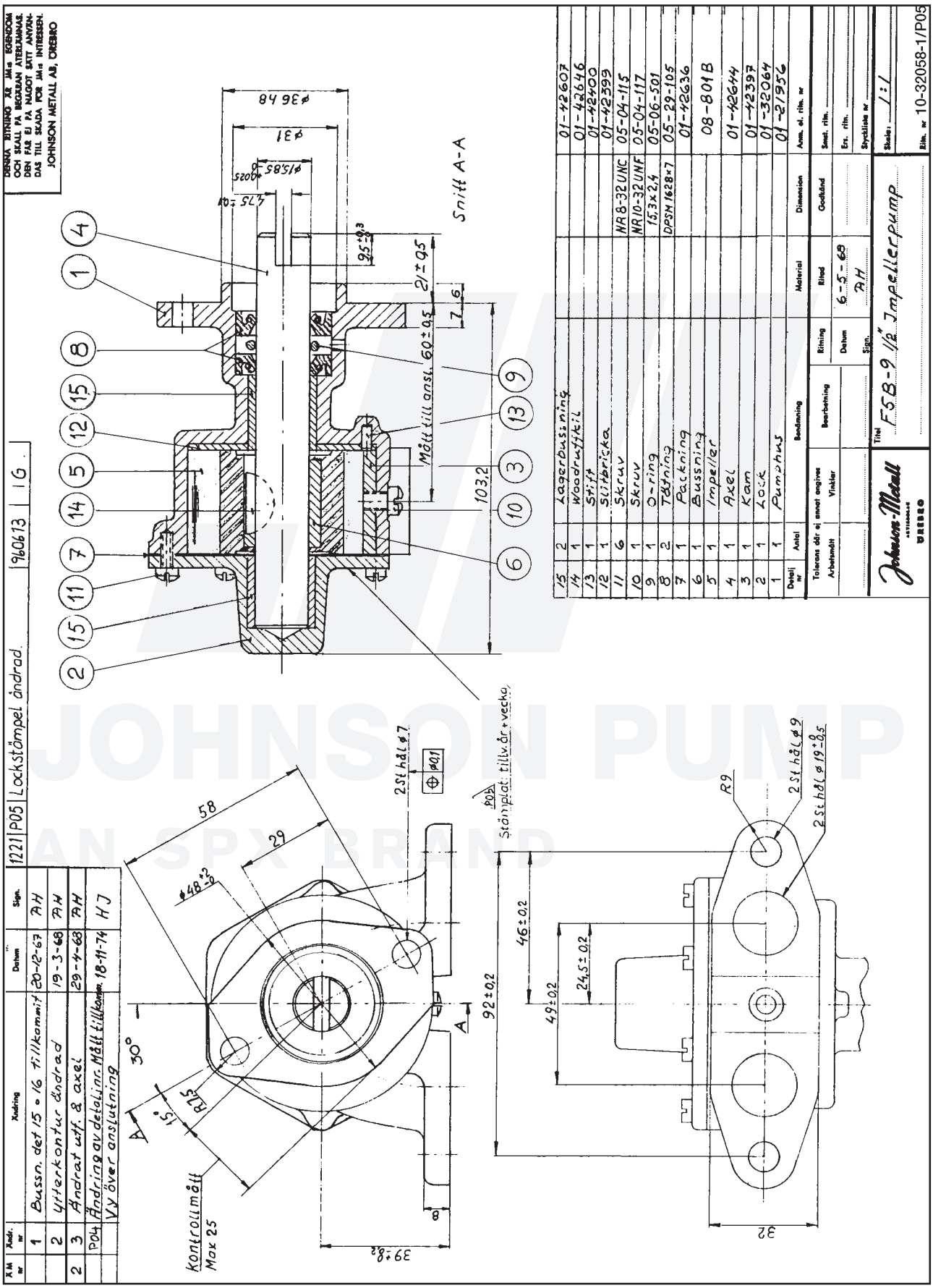

JOHNSON PUMP
AN SPX BRAND

The product, i.e. concept, design and construction, is the property of SPX Johnson Pump Marine AB

10-32256 pump F5B-9

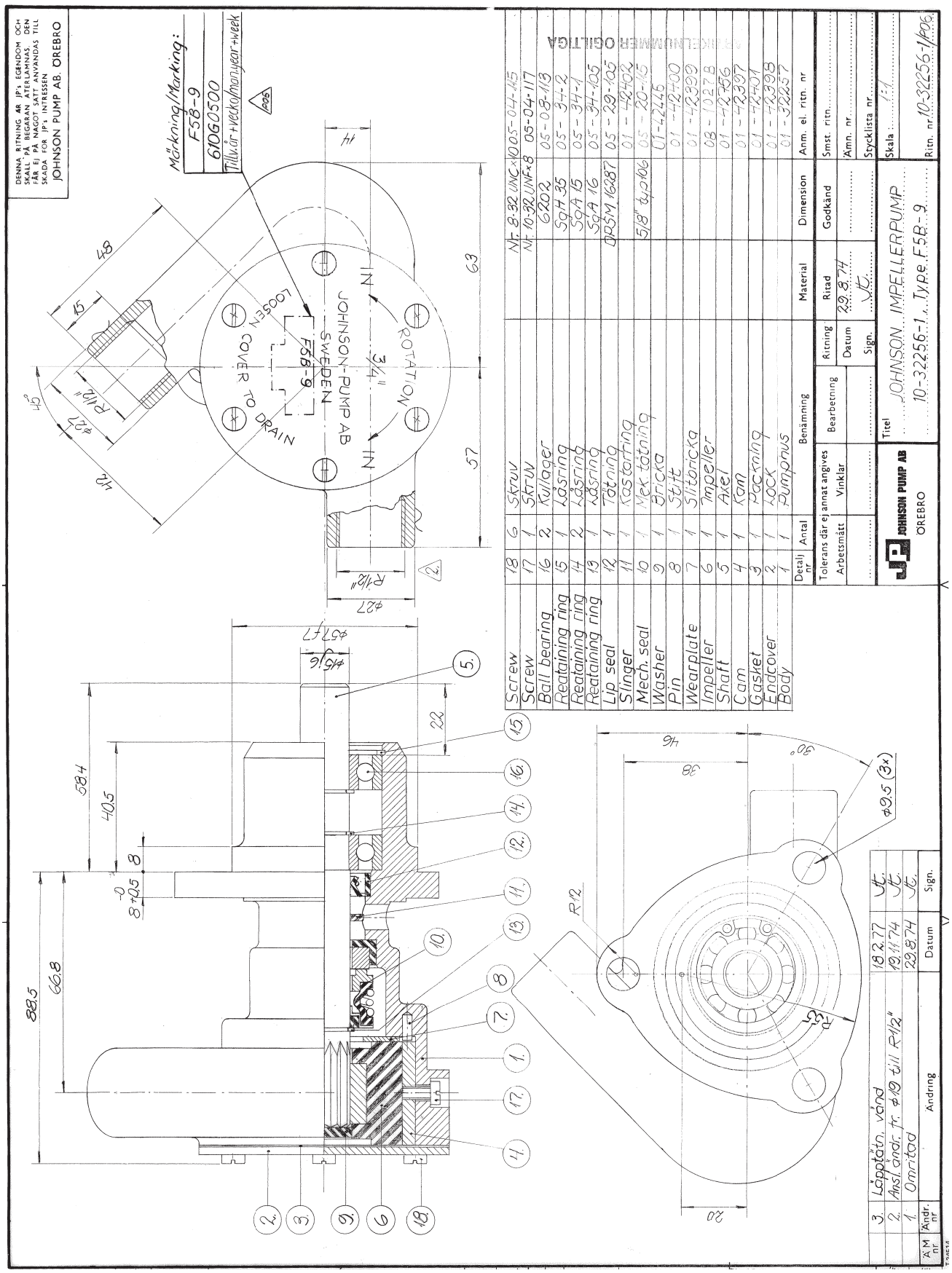

10-32603 pump F5B-9

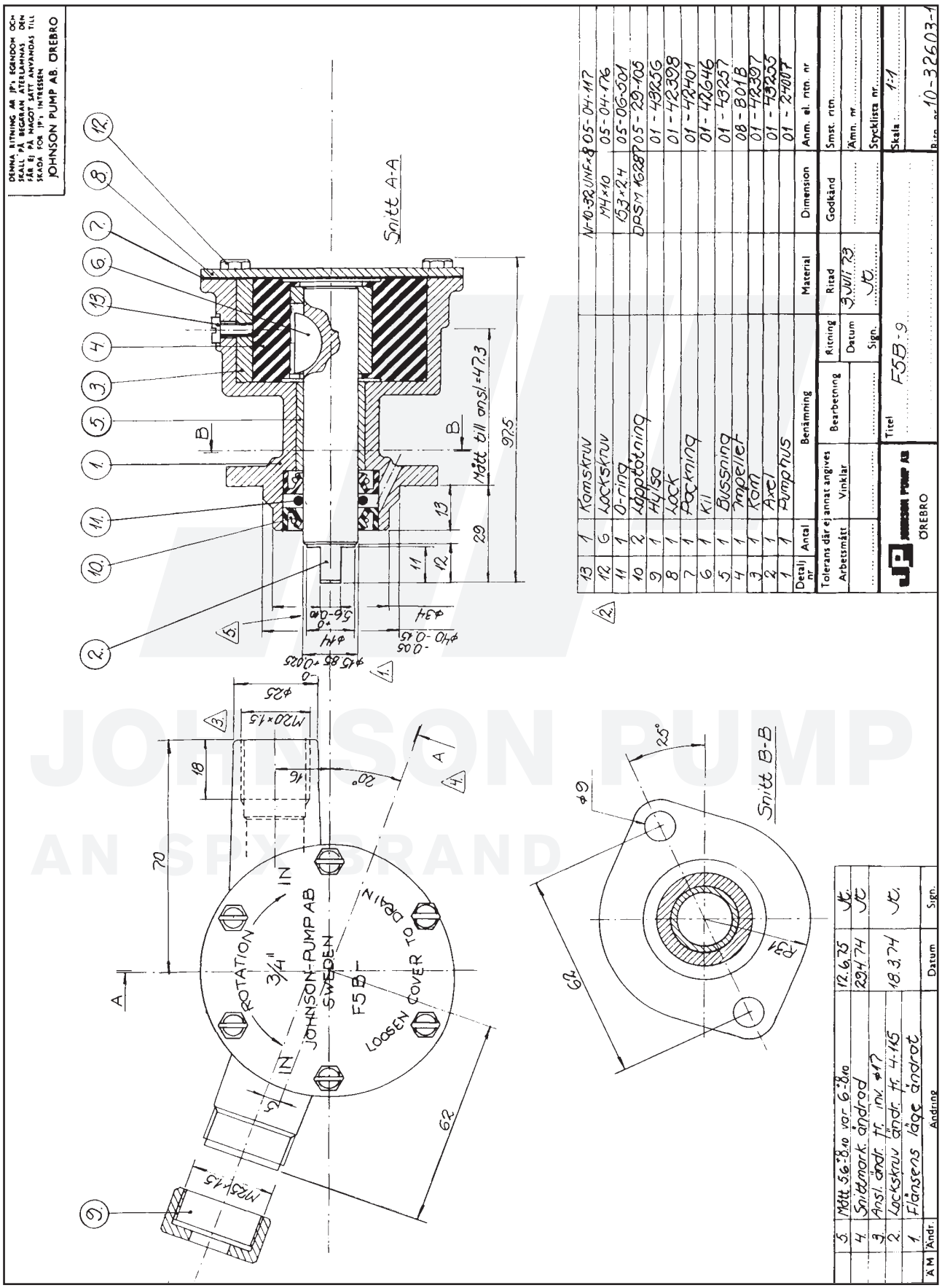

The product, i.e. concept, design and construction, is the property of SPX Johnson Pump Marine AB

10-32621 pump F5B-9

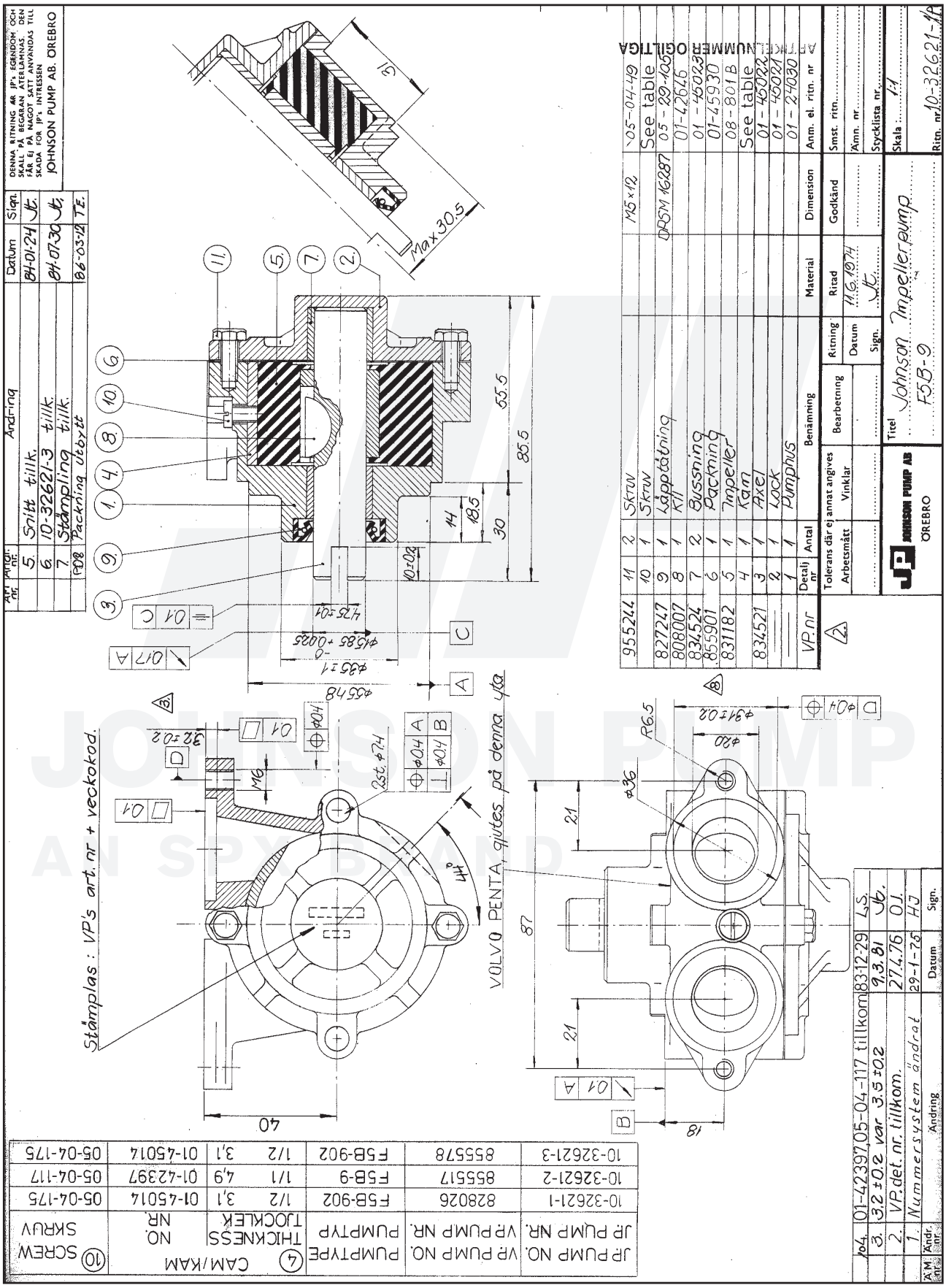

10-35067 pump F5B-9

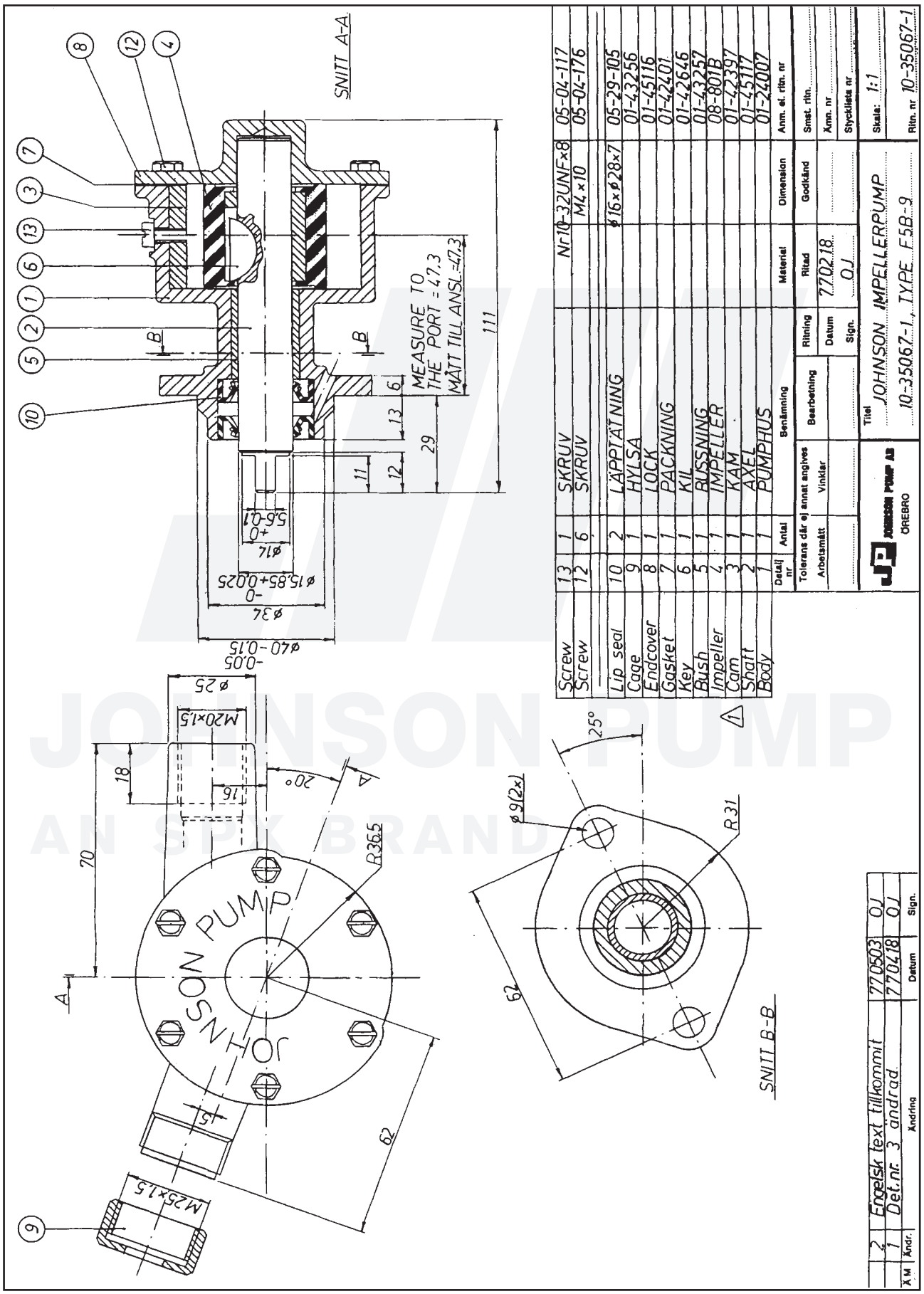

JOHNSON PUMP
AN SPX BRAND

The product, i.e. concept, design and construction, is the property of SPX Johnson Pump Marine AB

10-35100 pump F5B-9

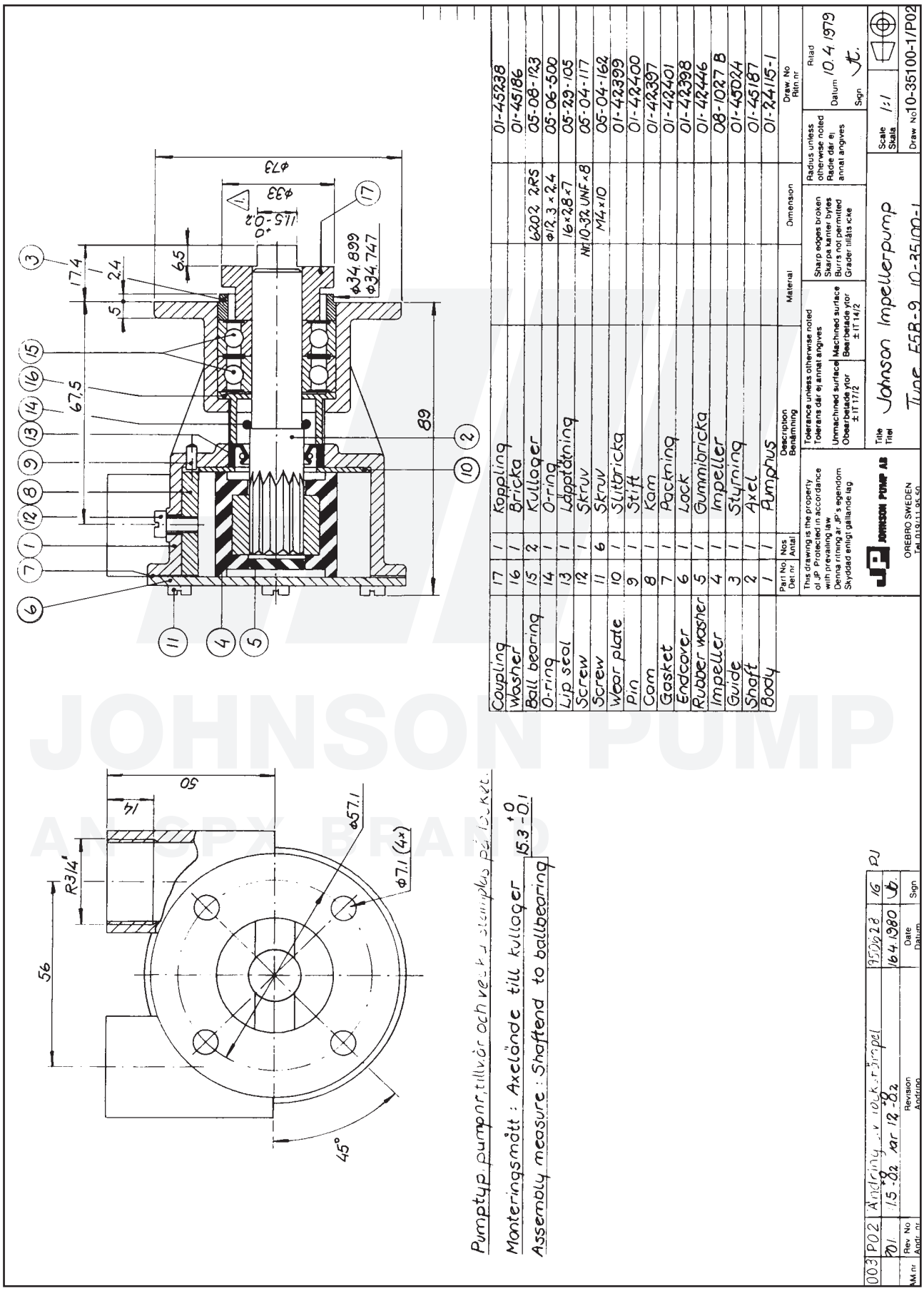

JOHNSON PUMP
AN SPX BRAND

10-35180 pump F5B-8021

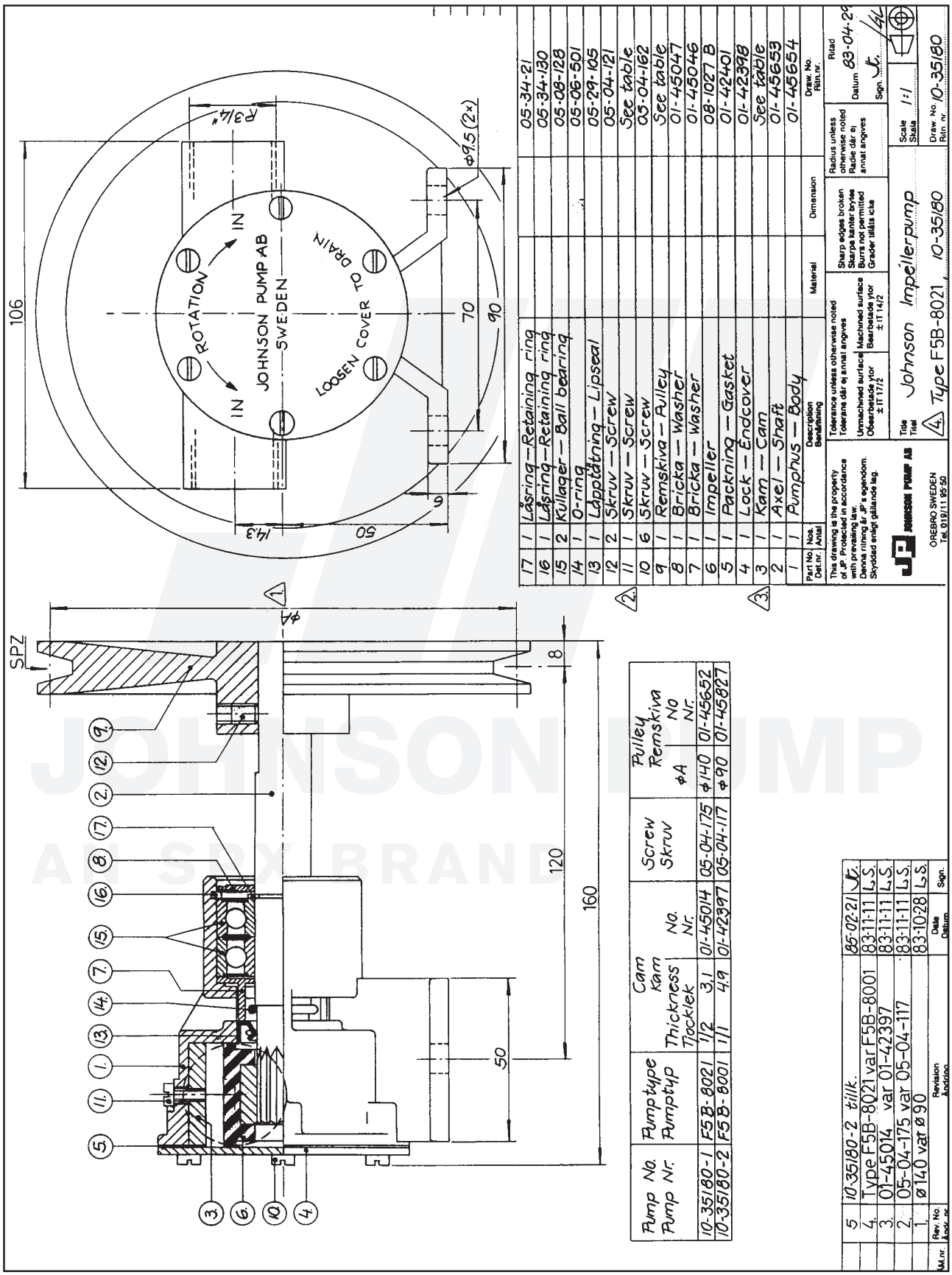

JOHNSON PUMP
AN SPX BRAND

The product, i.e. concept, design and construction, is the property of SPX Johnson Pump Marine AB

10-35231 pump F5B-9

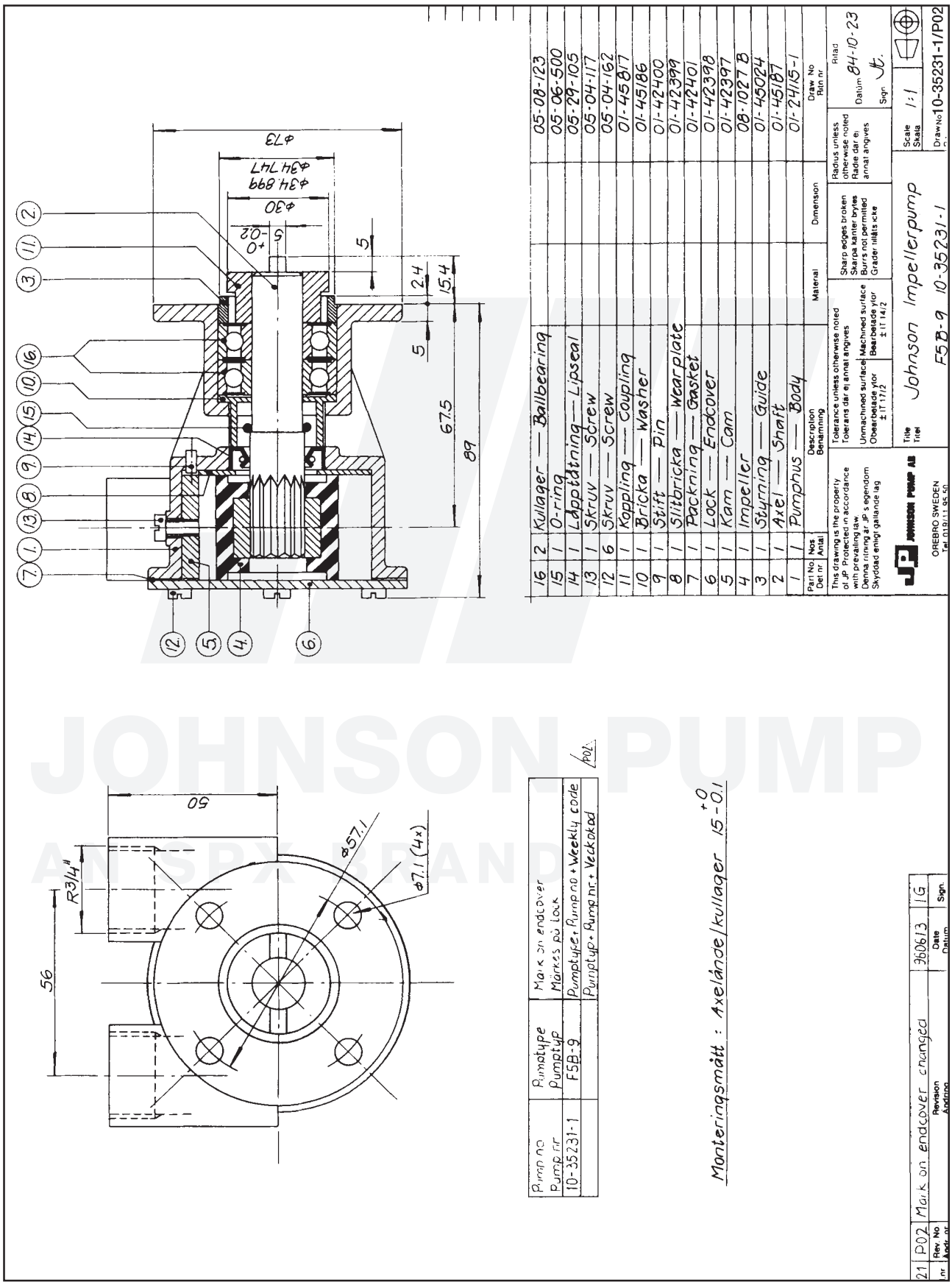

JOHNSON PUMP
AN SPX BRAND

10-35327 pump F5B-9

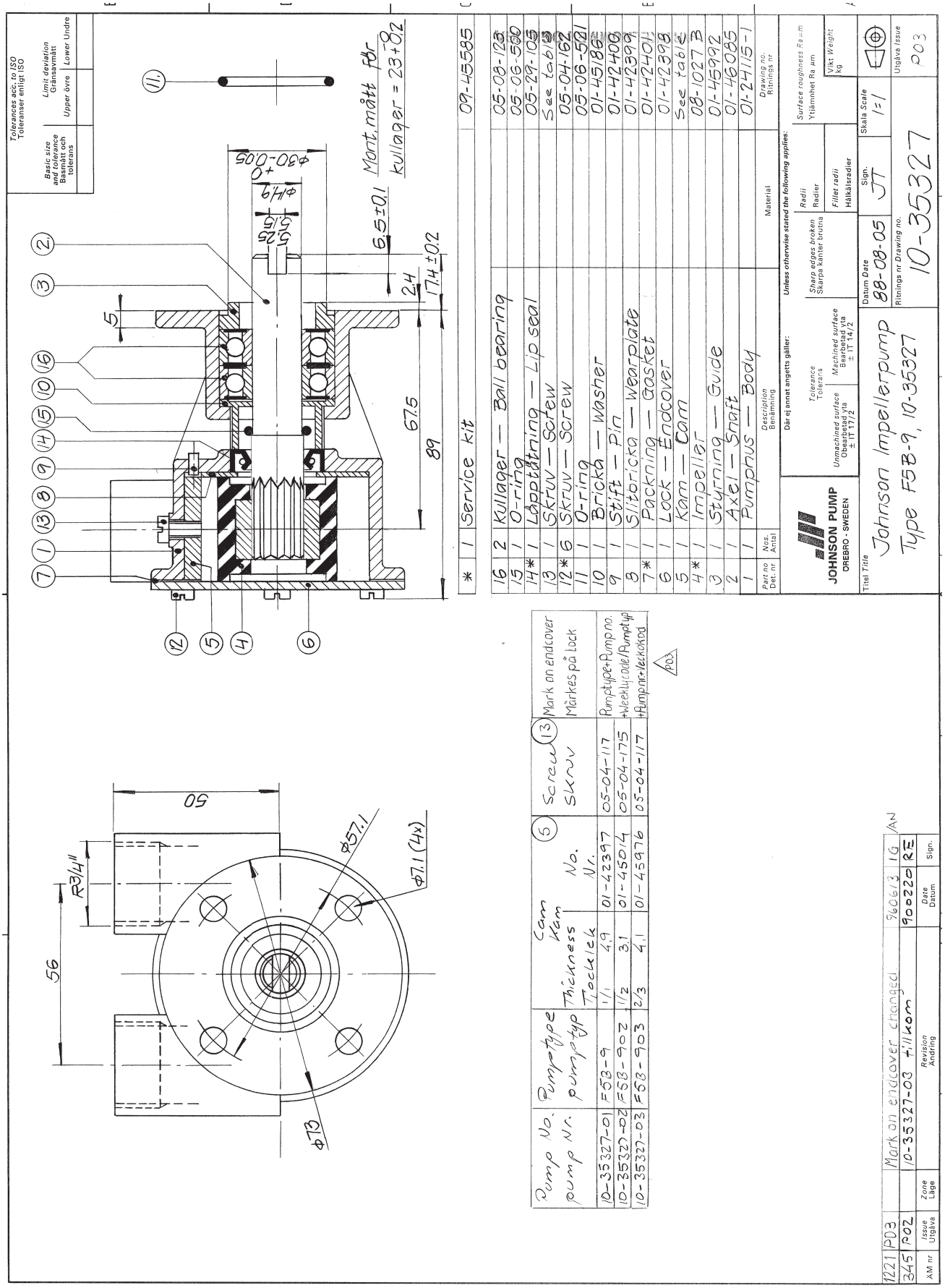

The product, i.e. concept, design and construction, is the property of SPX Johnson Pump Marine AB

10-42864 pump F5B-9

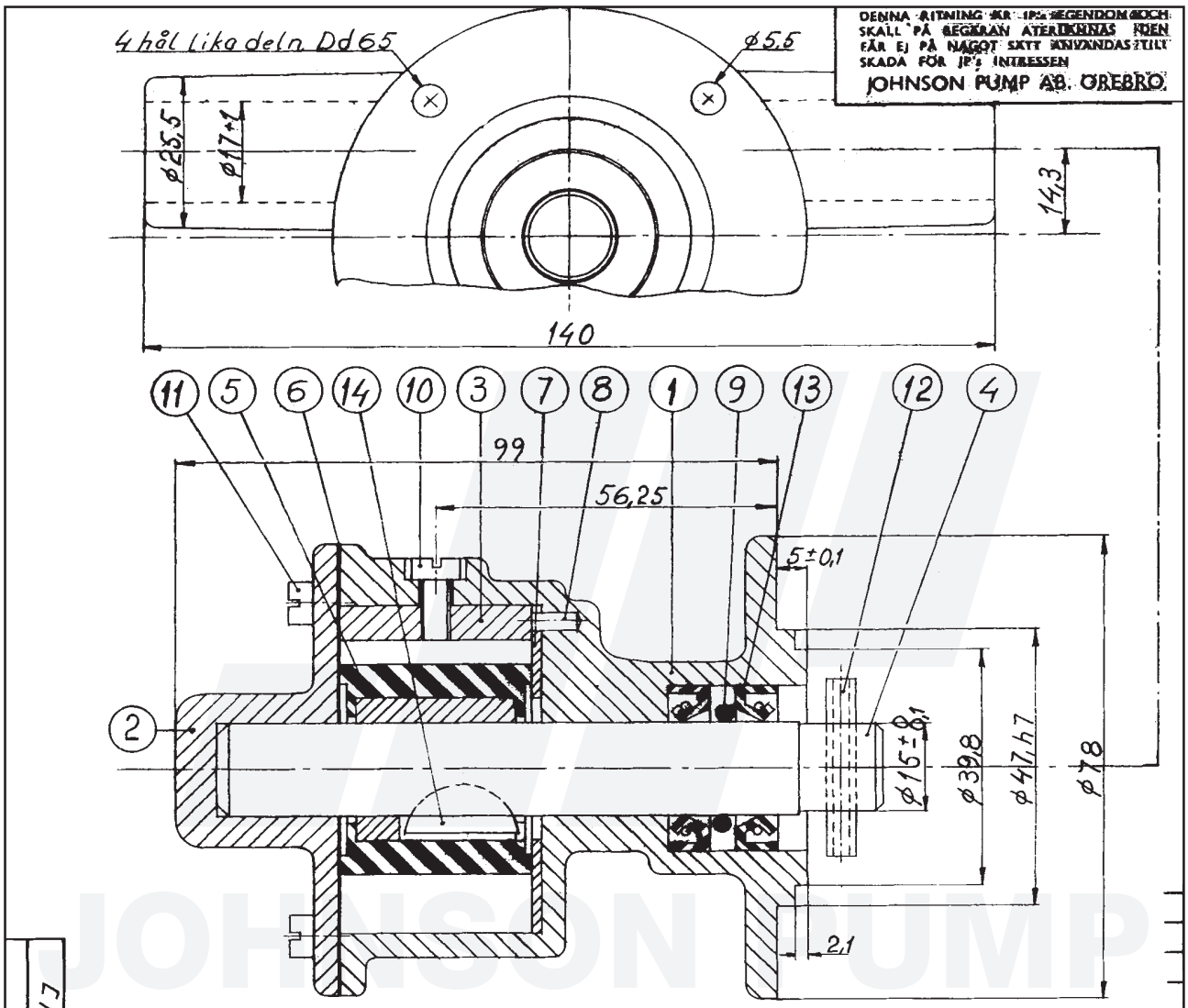

Detalj nr	Antal	Benämning	Material	Dimension	Anm. el. ritn. nr
14	1	Kil			01-42646
13	2	Tätning			05-29-105
12	1	Rörstift			05-03-120
11	6	Skruv			05-04-115
10	1	Skruv			05-04-117
9	1	O-ring			05-06-501
8	1	Stift			01-42400
7	1	Slitbricka			01-42399
6	1	Packning			01-42401
5	1	Impeller			08-801B
4	1	Axel			01-42866
3	1	Kam			01-42397
2	1	Lock			01-42865
1	1	Pumphus			01-32272

Tolerans där ej annat angives		Bearbetning	Ritning	Ritad	Godkänd	Smst. ritn.
Arbetsmätt	Vinklar		Datum	8-1-75		Ämn. nr
			Sign.	HJ		Stycklista nr

JOHNSON PUMP AB ÖREBRO

Titel Impellerpump F5B-9

Skala 1:1

Ritn. nr 10-42864-1

8-1-75 HJ

Omritad

F6B-9 Impeller pump
Art. No. 10-13208-01

Part no.	Description GB	Position	Quantity
01-13206-1	BODY F6B-9 (TOYOTA)	1	1
01-46669	SHAFT F6B-9	2	1
01-46556	END COVER F6B-9	3	1
08-812B	IMPELLER F6B-9	4	1
0.2173.475	O-RING 57.6X2.4 SS1586 NBR70	5	1
0.2233.001	LIP SEAL 16X28X7 DPSM	6	1
0.3431.742	BALL BEARING 6203 2 RS1 ST	7	2
0.2173.402	O-RING 15.3X2.4 SS1586 NBR70	8	1
0.0370.017	EXT. CIRCLIP D17 DIN471 ST	9	1
0.0279.301	SCREW M5X8 ISO1207 A4	10	4
0.0371.040	RETAIN. RING BORE D40 DIN472 SPRST	11	1
01-42862	SPACER S200/500 HD	12	1

The product, i.e. concept, design and construction, is the property of SPX Johnson Pump Marine AB

10-13208 pump F6B-9

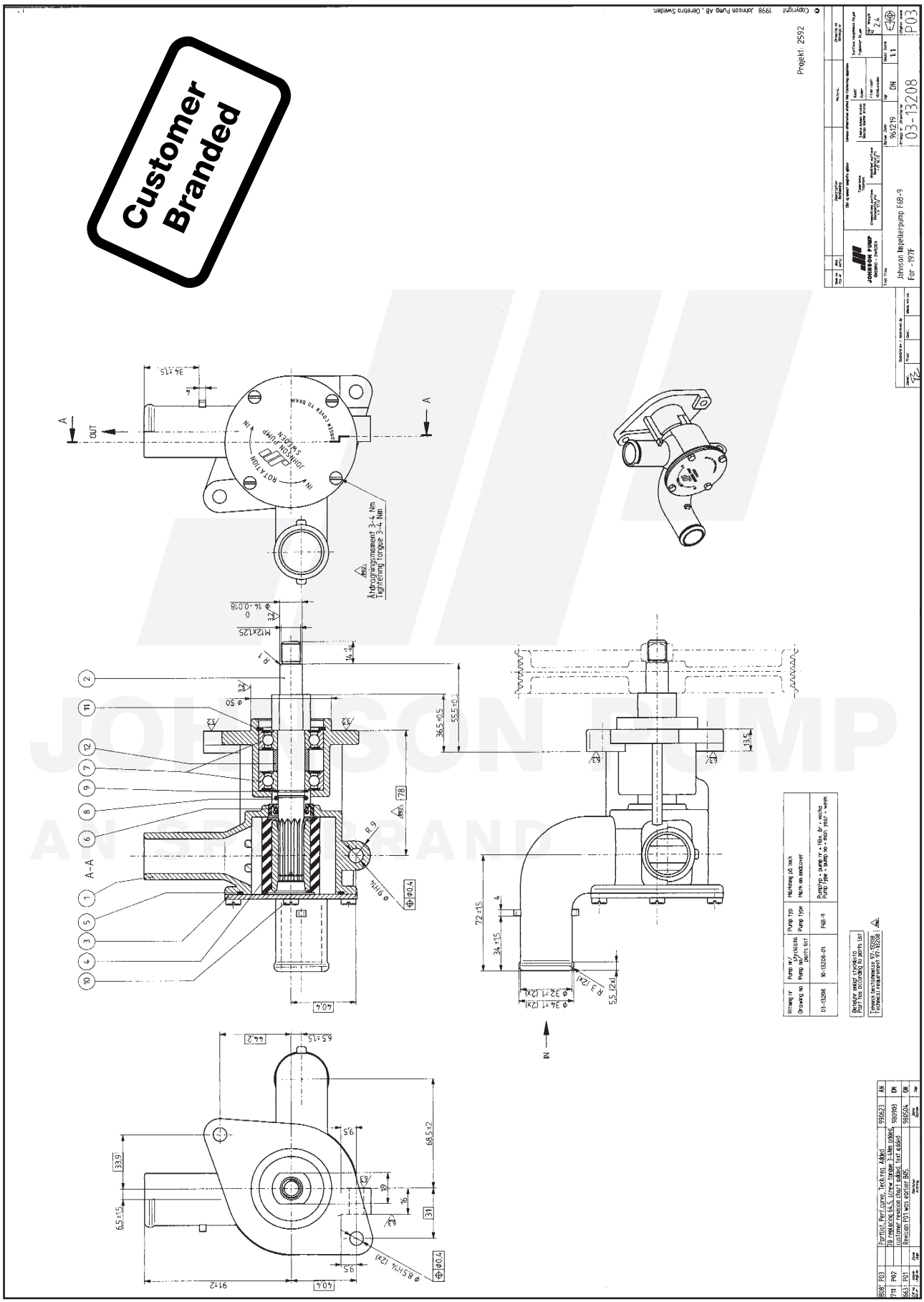

JOHNSON PUMP
AN SPX BRAND

10-13333 pump F6B-9

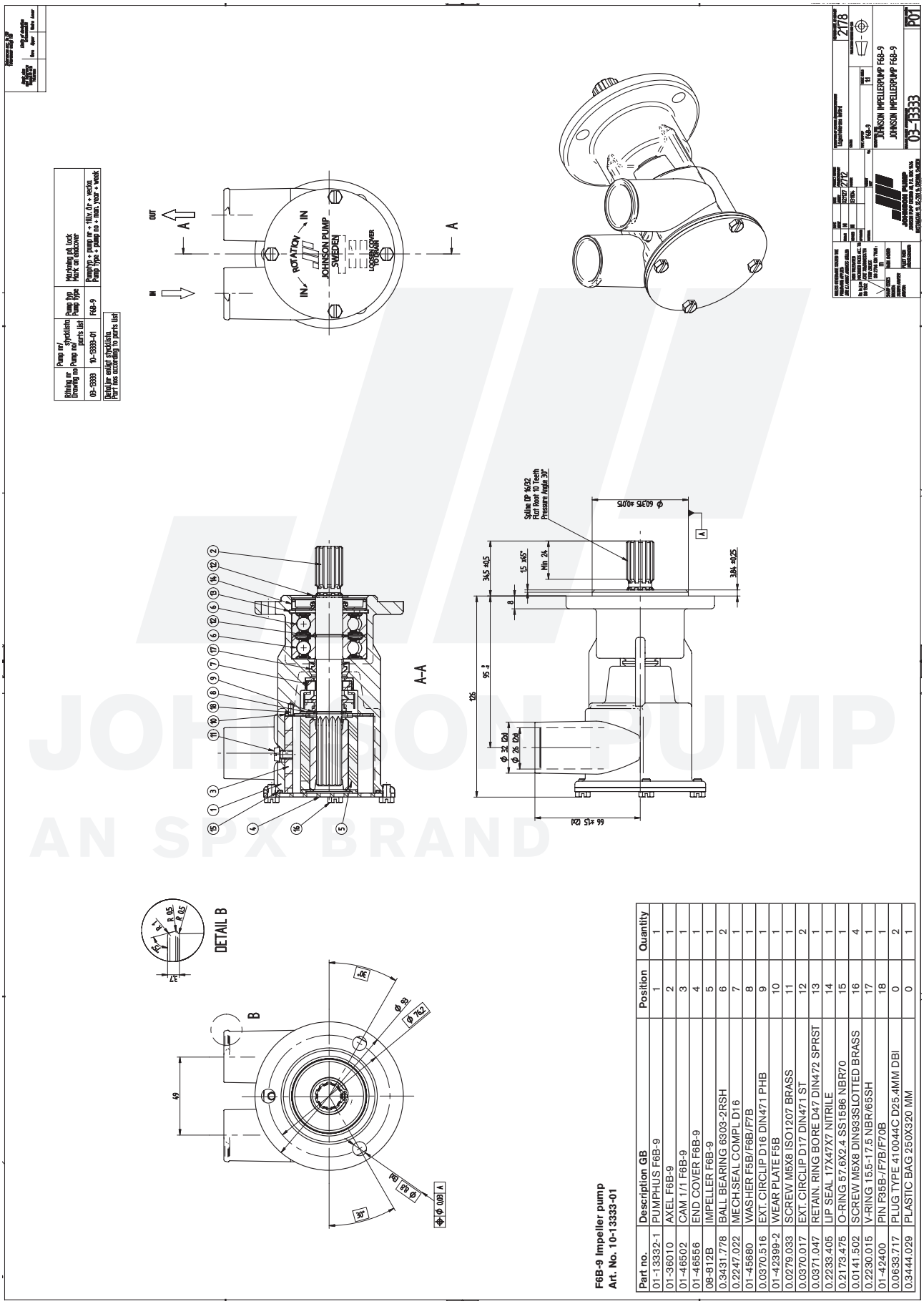

F6B-9 Impeller pump
Art. No. 10-13333-01

Part no.	Description GB	Position	Quantity
01-13332-1	PUMPHUS F6B-9	1	1
01-36010	AXEL F6B-9	2	1
01-46502	CAM 1/1 F6B-9	3	1
01-46556	END COVER F6B-9	4	1
08-812B	IMPELLER F6B-9	5	1
0.3431.778	BALL BEARING 6303-2RSH	6	2
0.2247.022	MECH.SEAL COMPL D16	7	1
01-45680	WASHER F5B/F6B/F7B	8	1
0.0370.516	EXT. CIRCLIP D16 DIN471 PHB	9	1
01-42399-2	WEAR PLATE F5B	10	1
0.0279.033	SCREW M5X8 ISO1207 BRASS	11	1
0.0370.017	EXT. CIRCLIP D17 DIN471 ST	12	2
0.0371.047	RETAIN. RING BORE D47 DIN472 SPRST	13	1
0.2233.405	LIP SEAL 17X47X7 NITRILE	14	1
0.2173.475	O-RING 57.6X2.4 SS1586 NBR70	15	1
0.0141.502	SCREW M5X8 DIN933SLOTTED BRASS	16	4
0.2230.015	V-RING 15.5-17.5 NBR/65SH	17	1
01-42400	PIN F35B-/F7B/F70B	18	1
0.0633.717	PLUG TYPE 410044C D25.4MM DBI	0	2
0.3444.029	PLASTIC BAG 250X320 MM	0	1

JOHNSON PUMP
AN SPX BRAND

The product, i.e. concept, design and construction, is the property of SPX Johnson Pump Marine AB

10-13345 pump F6B-9

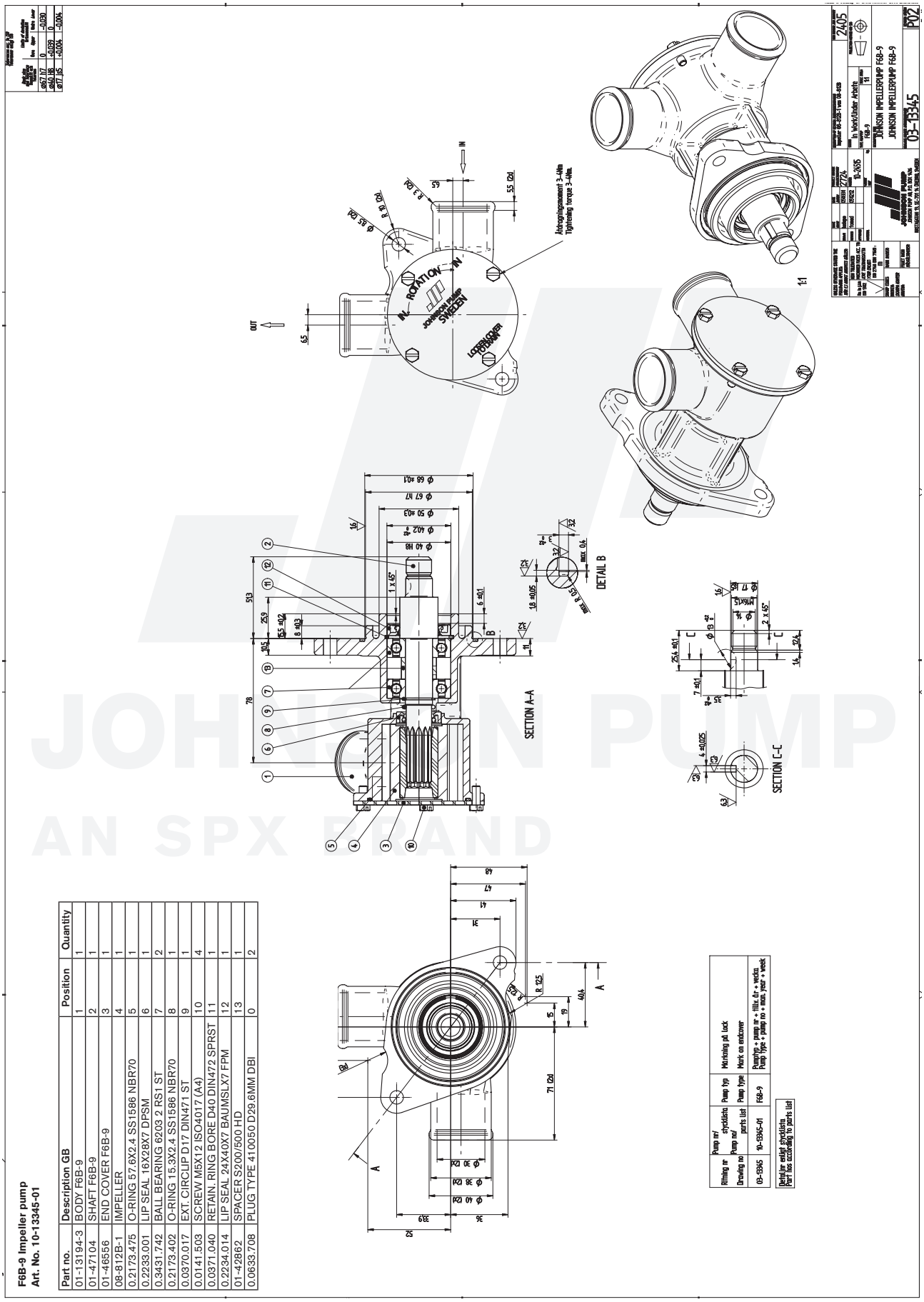

F6B-9 Impeller pump
Art. No. 10-13345-01

Part no.	Description GB	Position	Quantity
01-13194-3	BODY F6B-9	1	1
01-47104	SHAFT F6B-9	2	1
01-46556	END COVER F6B-9	3	1
08-812B-1	IMPELLER	4	1
0.2173.475	O-RING 57.6X2.4 SS1586 NBR70	5	1
0.2233.001	LIP SEAL 16X28X7 DPSM	6	1
0.3431.742	BALL BEARING 6203 2 RS1 ST	7	2
0.2173.402	O-RING 15.3X2.4 SS1586 NBR70	8	1
0.0370.017	EXT. CIRCLIP D17 DIN471 ST	9	1
0.0141.503	SCREW M5X12 ISO4017 (A4)	10	4
0.0371.040	RETAIN. RING BORE D40 DIN472 SPRST	11	1
0.2234.014	LIP SEAL 24X40X7 BAUMSLX7 FPM	12	1
01-42862	SPACER S200/500 HD	13	1
0.0633.708	PLUG TYPE 410050 D29.6MM DBI	0	2

Rihning nr / Drawing no	Pump nr/ stycklista / Pump no/ parts list	Pump typ / Pump type	Märkning på lock / Mark on endcover
03-13345	10-13345-01	F6B-9	Pumptyp + rämp nr + tillv. år + vecka / Pump type + pump no + mfrn. year + week

Detaljer enligt stycklista
Part nos according to parts list

JOHNSON PUMP
AN SPX BRAND

10-13376 pump F6B-9

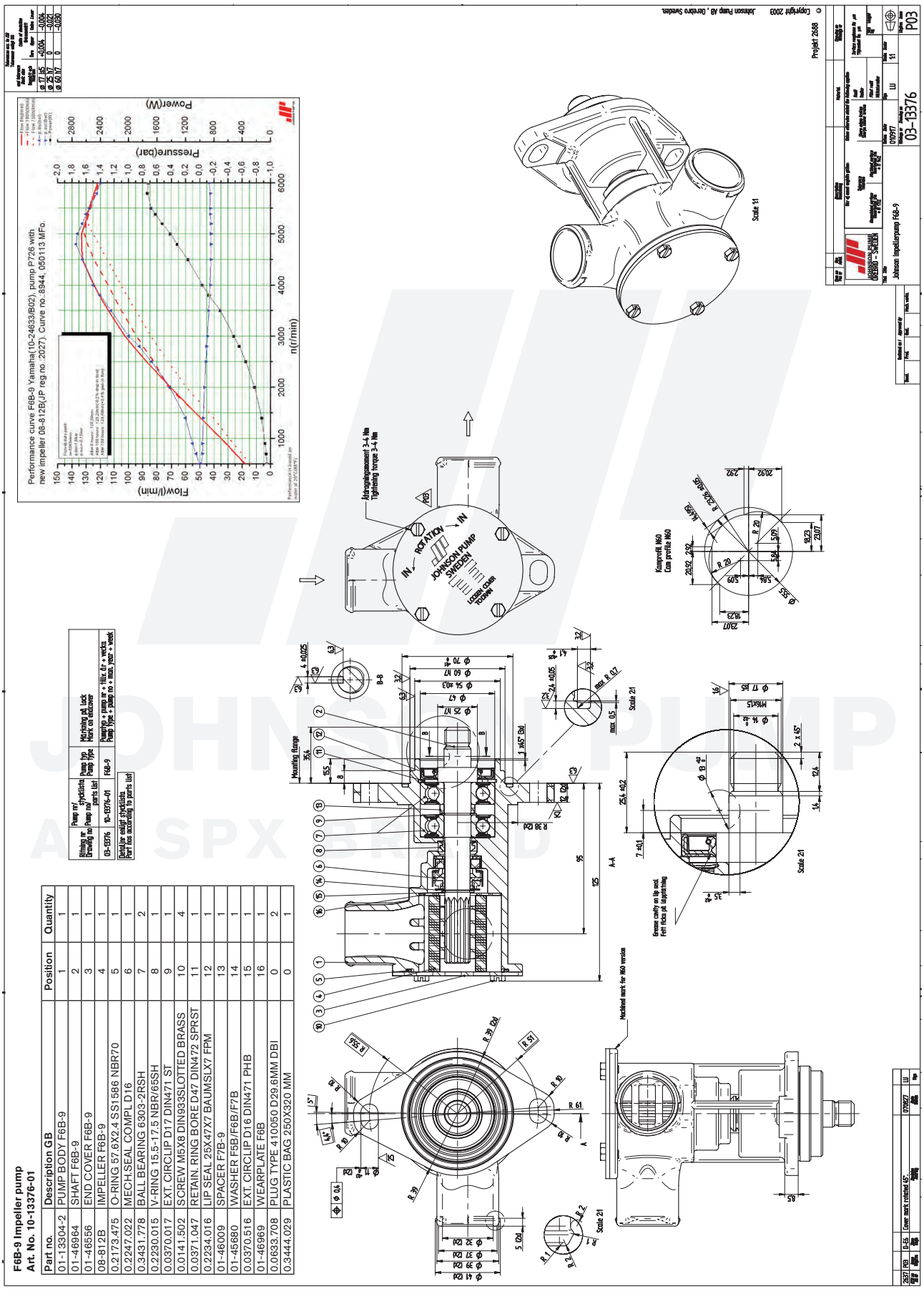

Part no.	Description GB	Position	Quantity
01-13304-2	PUMP BODY F6B-9	1	1
01-46964	SHAFT F6B-9	2	1
01-46556	END COVER F6B-9	3	1
08-812B	IMPELLER F6B-9	4	1
0.2173.475	O-RING 57.6X2.4 SS1586 NBR70	5	1
0.2247.022	MECH.SEAL COMPL D16	6	1
0.3431.778	BALL BEARING 6303-2RSH	7	2
0.2230.015	V-RING 15.5-17.5 NBR/65SH	8	1
0.0370.017	EXT. CIRCLIP D17 DIN471 ST	9	1
0.0141.502	SCREW M5X8 DIN933SLOTTED BRASS	10	4
0.0371.047	RETAIN. RING BORE D47 DIN472 SPRST	11	1
0.2234.016	LIP SEAL 25X47X7 BAUMSLX7 FPM	12	1
01-46009	SPACER F7B-9	13	1
01-45680	WASHER F6B/F6B/F7B	14	1
0.0370.516	EXT. CIRCLIP D16 DIN471 PHB	15	1
01-46969	WEARPLATE F6B	16	1
0.0633.708	PLUG TYPE 410050 D29.6MM DBI	0	2
0.3444.029	PLASTIC BAG 250X320 MM	0	1

JOHNSON PUMP
A SPX BRAND

The product, i.e. concept, design and construction, is the property of SPX Johnson Pump Marine AB

10-24234 pump F6B-9

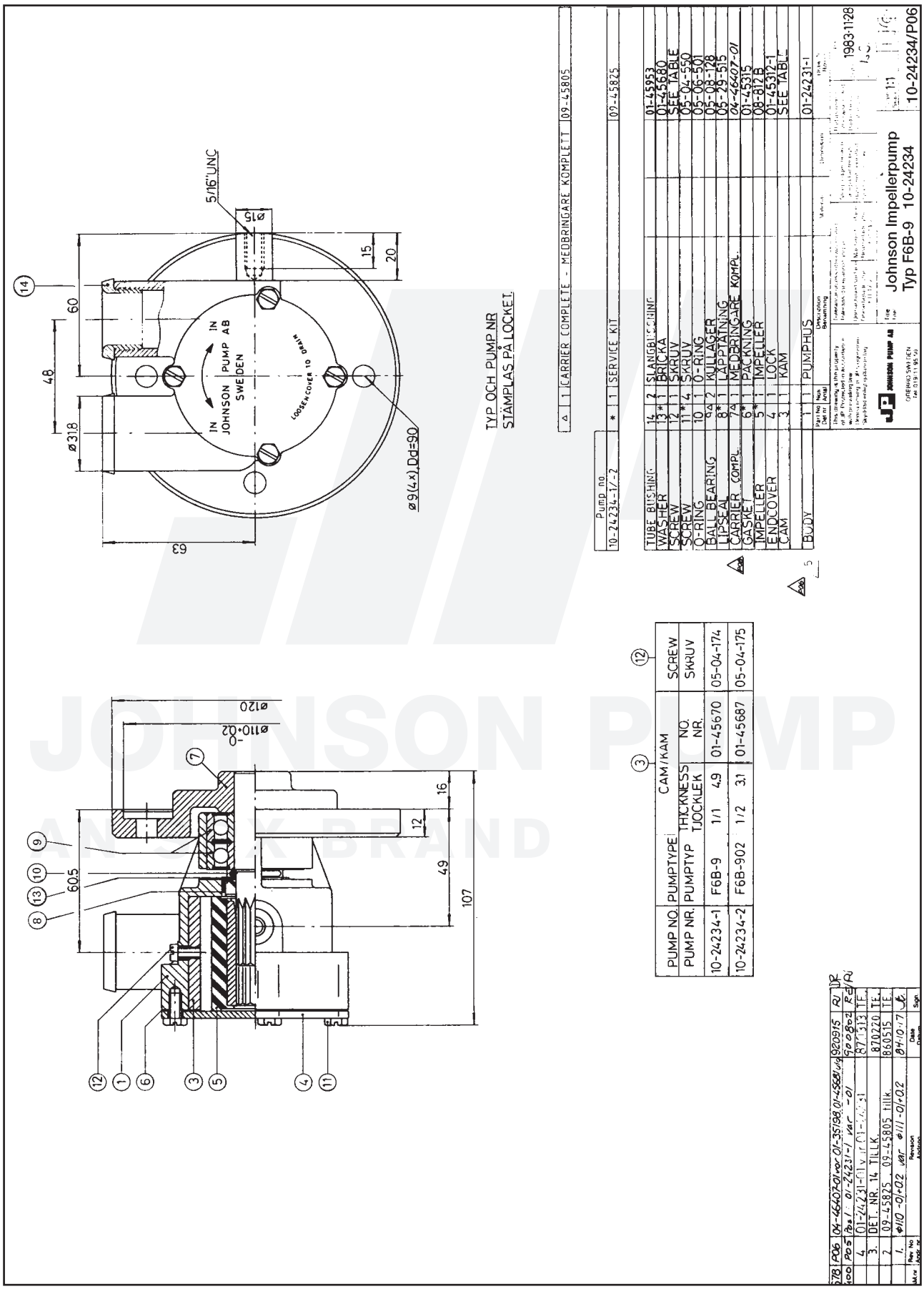

Pump no.			
10-24234-1/-2	*	1	SERVICE KIT 09-45825
	△	1	CARRIER COMPLETE - MEDBRINGARE KOMPLETT 09-45805

Pos	Qty	Description	Material
14	2	SLANGBUSSNING	01-45953
13*	1	BRICKA	01-45680
12	1	SKRUV	SEE TABLE
11*	4	SKRUV	05-04-550
10	1	O-RING	05-06-501
9a	2	KULLAGER	05-08-128
8*	1	LÄPPTÄTNING	05-29-515
7a	1	MEDBRINGARE KOMPL.	04-46407-01
6*	1	PACKNING	01-45315
5*	1	IMPELLER	08-812 B
4	1	LOCK	01-45312-1
3	1	KAM	SEE TABLE
1	1	PUMPHUS	01-24231-1

PUMP NO.	PUMPTYPE	CAM/KAM		SCREW
PUMP NR.	PUMPTYP	THICKNESS TJOCKLEK	NO. NR.	SKRUV
10-24234-1	F6B-9	1/1 4.9	01-45670	05-04-174
10-24234-2	F6B-902	1/2 3.1	01-45687	05-04-175

Rev No / Ändr. nr	Revision / Ändring	Date / Datum	Sign.
1.	ø110-0/+0.02 var ø111-0/+0.02	84-10-17	
2.	09-45825 09-45805 tillk.	860515	TE
3.	DET. NR. 14 TILLK.	870220	TE
4.	01-24231-1 var 01-24231	871513	TE
4.	Pos 1 01-24231-1 var -01	920802	RJ/RJ
4.	04-46407-01 var 01-35198, 01-45681	920915	RJ

JOHNSON PUMP
ANY OK BRAND

F6B-9 Impeller pump
Art. No. 10-24412-02

Part No.	Description GB	Position	Quantity
01-24411-1	Body	1	1
01-46268	Shaft	2	1
01-45670	Cam	3	1
01-45312-1	Endcover	4	1
08-812B	Impeller	5	1
01-45315	Gasket	6	1
05-29-105	Lipseal	7	2
05-08-511	Ball bearing	8	2
05-06-501	O-ring	9	1
05-34-107	Retaining ring	10	1
05-04-550	Screw	11	4
05-04-174	screw	12	1
05-34-507	Retaining ring	13	1
01-45181	Washer	14	1

JOHNSON PUMP
AN SPX BRAND

The product, i.e. concept, design and construction, is the property of SPX Johnson Pump Marine AB

10-24412 pump F6B-9

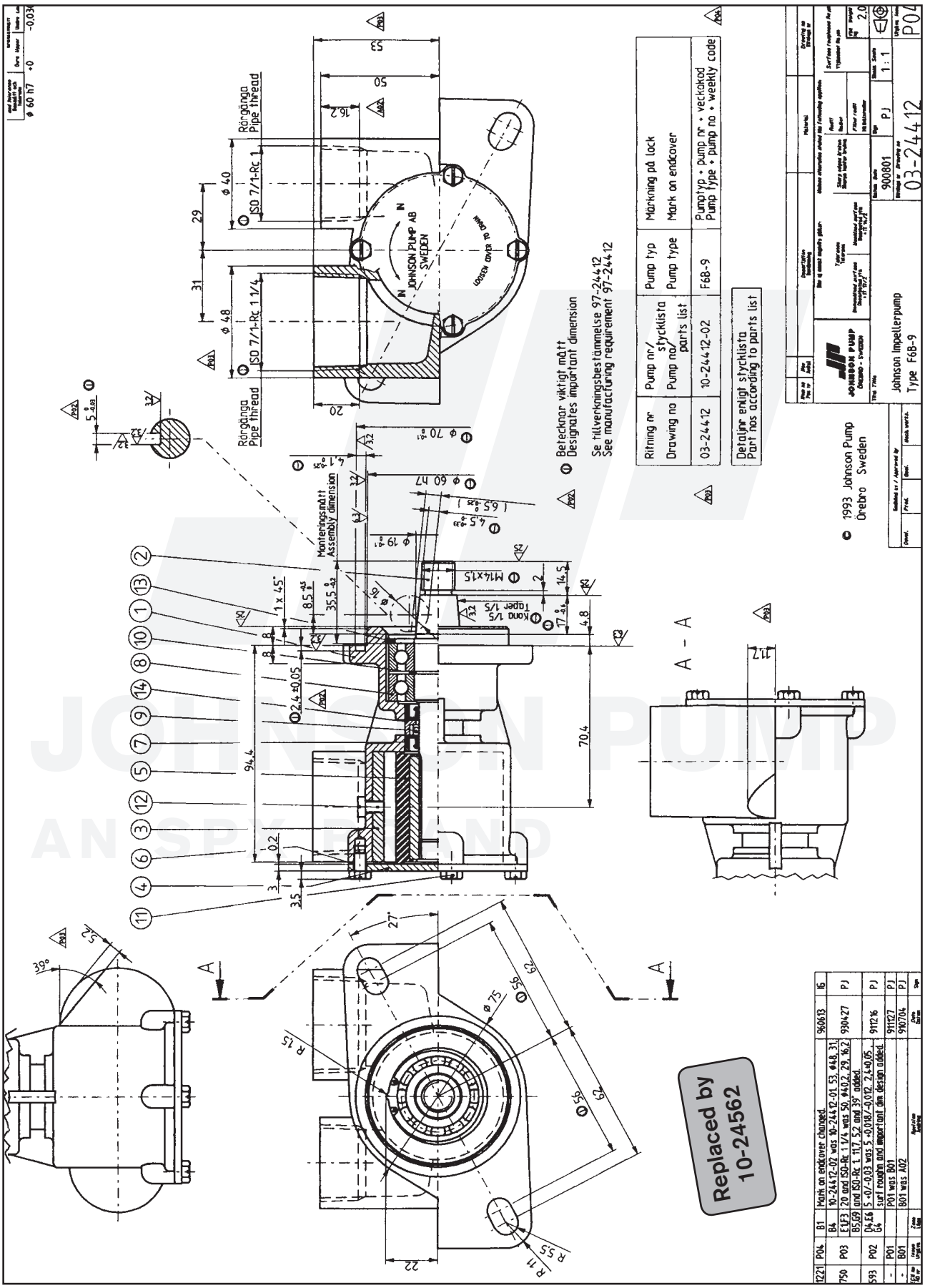

JOHNSON PUMP
AN SPX BRAND

F6B-9 Impeller pump
Art. No. 10-24493-01

Part. No	Description GB	Position	Quantity
01-24491-1	BODY F6B-9	1	1
01-24492-1	HOSE CONNECTION F6B-9	2	1
01-46535	ENDCOVER F5B/6B	3	1
0.2173.475	O-RING 57.6X2.4 SS1586 NBR70	4	1
01-46268-2	SHAFT F6B-9	5	1
01-46502	CAM 1/1 F6B-9	6	1
01-45181	WASHER F5/F7B-9	7	1
0.0353.309	SPRINGWASH D8.2 DIN127 STZN	8	4
0.0279.033	SCREW M5X8 ISO1207 BRASS	9	1
0.0142.602	TAP BOLT M8X70 DIN931 8.8ZN	10	2
0.0141.502	SCREW M5X8 DIN933SLOTTED BRASS	11	4
0.2173.402	O-RING 15.3X2.4 SS1586 NBR70	12	1
0.3431.444	BALL BEARING 6004 ST	13	2
0.2233.001	LIP SEAL 16X28X7 DPSM	14	2
0.0370.020	RETAIN. RING SHAFT D20 DIN471 SPRST	15	1
0.0371.042	RETAIN. RING BORE D42 DIN472 SPRST	16	1
08-812B	IMPELLER F6B-9	17	1
0.0142.601	TAP BOLT M8X60 DIN931 8.8ZN	18	2
19-11978742570	GASKET (YANMAR)	19	1

The product, i.e. concept, design and construction, is the property of SPX Johnson Pump Marine AB

10-24493 pump F6B-9

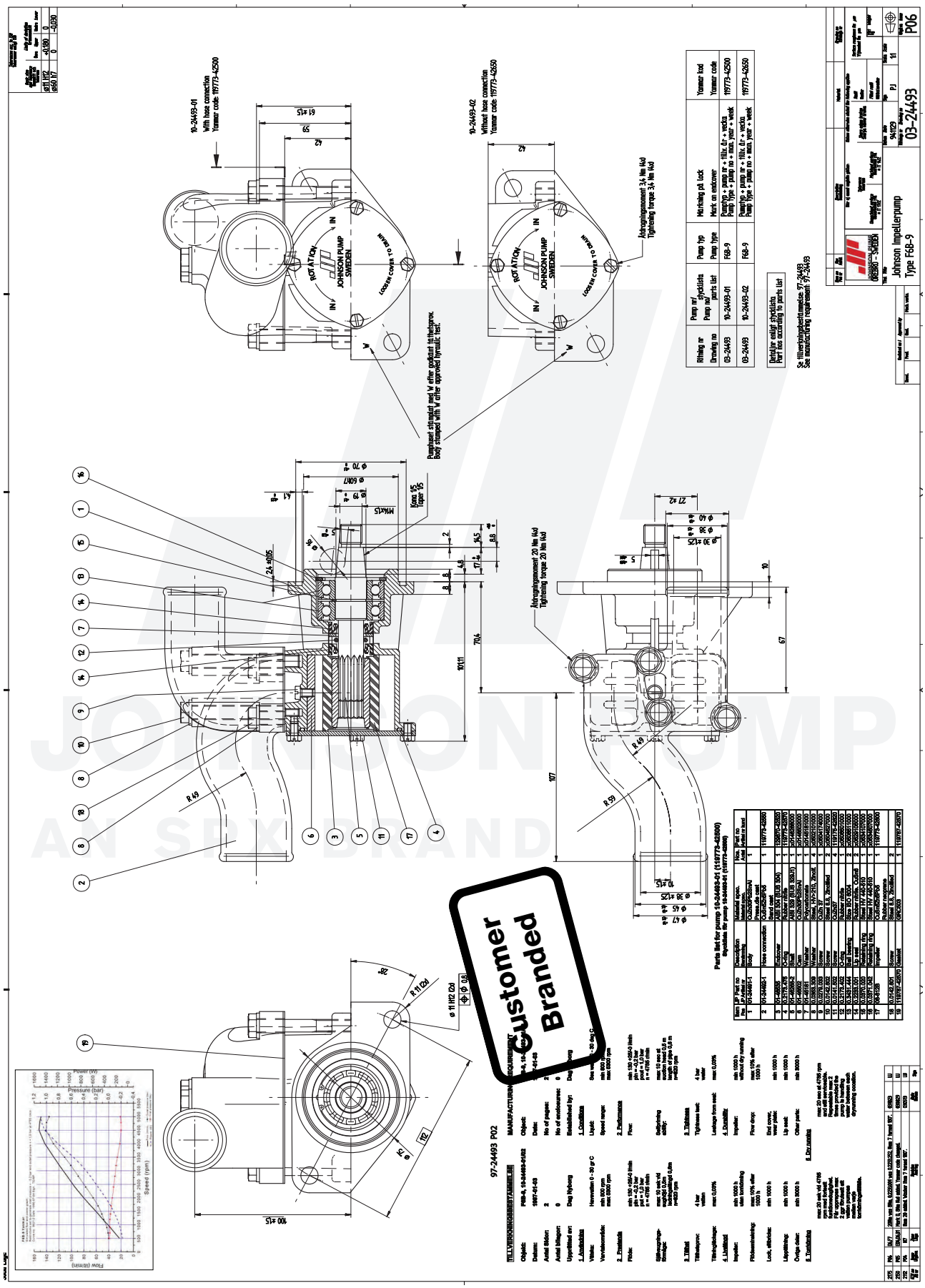

F6B-9 Impeller pump
Art. No. 10-24515-01

Part. No.	Description GB	Position	Quantity
01-13194-2	BODY F6B-9	1	1
01-46596	SHAFT F6B-9	2	1
01-46556	END COVER F6B-9	3	1
08-812B-1	IMPELLER	4	1
0.2173.475	O-RING 57.6X2.4 SS1586 NBR70	5	1
0.2233.001	LIP SEAL 16X28X7 DPSM	6	1
0.3431.742	BALL BEARING 6203 2 RS1 ST	7	2
0.2173.402	O-RING 15.3X2.4 SS1586 NBR70	8	1
0.0370.017	EXT. CIRCLIP D17 DIN471 ST	9	1
0.0141.503	SCREW M5X12 ISO4017 (A4)	10	4
0.0371.040	RETAIN. RING BORE D40 DIN472 SPRST	11	1
0.2234.014	LIP SEAL 24X40X7 BAUMSLX7 FPM	12	1
01-42862	SPACER S200/500 HD	13	1

The product, i.e. concept, design and construction, is the property of SPX Johnson Pump Marine AB

10-24515 pump F6B-9

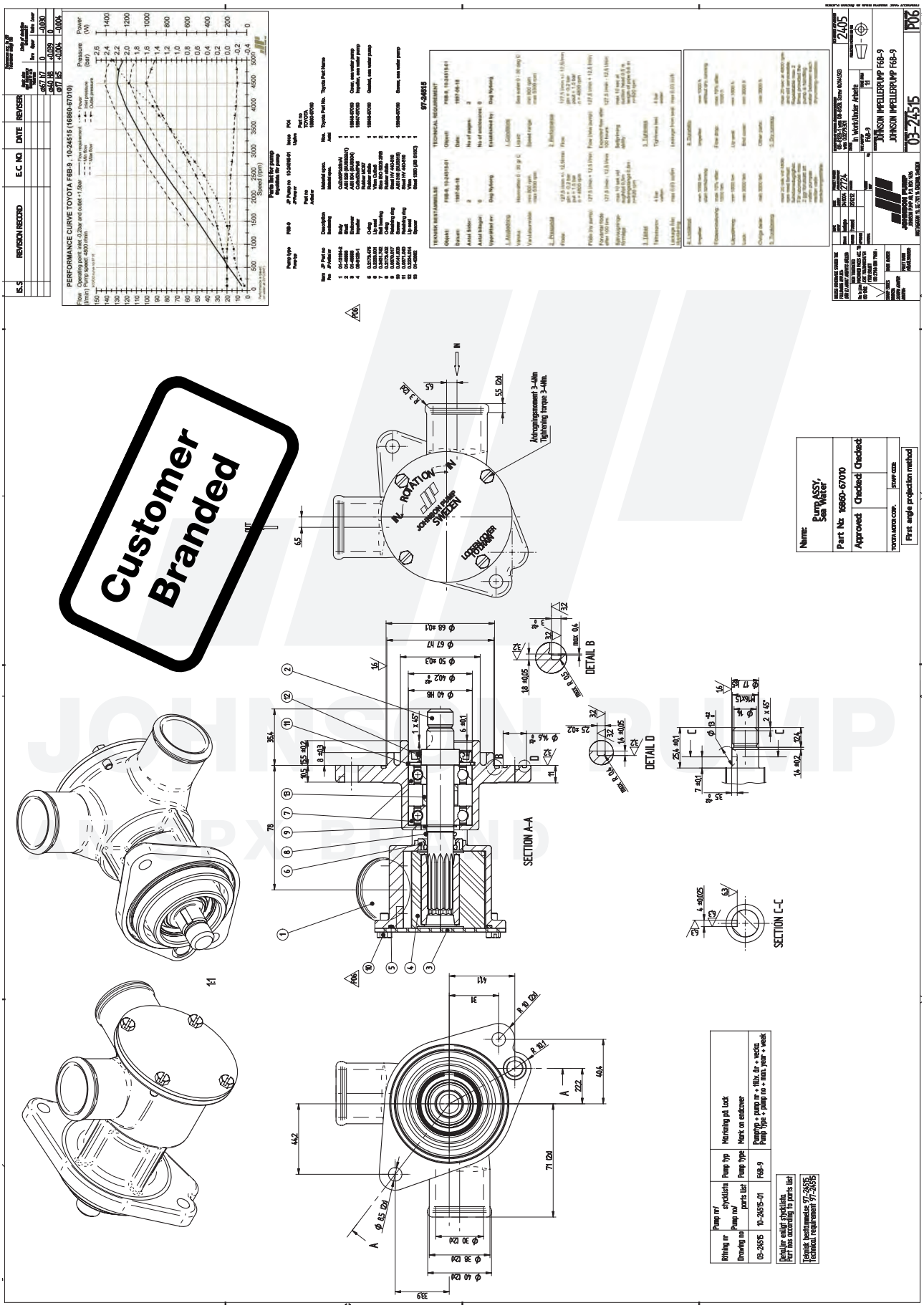

F6B-9 Impeller pump
Art. No. 10-24562-01

Part no.	Description GB	Position	Quantity
01-24561-1	BODY F6B-9	1	1
01-46268	SHAFT F6B	2	1
01-45670	CAM 1/1 F6B-9	3	1
01-46723	END COVER F6B-9	4	1
08-812B	IMPELLER F6B-9	5	1
0.2173.475	O-RING 57.6X2.4 SS1586 NBR70	6	1
0.2233.001	LIP SEAL 16X28X7 DPSM	7	2
0.3431.444	BALL BEARING 6004 ST	8	2
0.2173.402	O-RING 15.3X2.4 SS1586 NBR70	9	1
0.0370.020	EXT. CIRCLIP D20 DIN471 ST	10	1
0.0141.502	SCREW M5X8 DIN933SLOTTED BRASS	11	4
0.0279.033	SCREW M5X8 ISO1207 BRASS	12	1
0.0371.042	RETAIN. RING BORE D42 DIN472 SPRST	13	1
01-45181	WASHER F5/F7B-9	14	1

The product, i.e. concept, design and construction, is the property of SPX Johnson Pump Marine AB

10-24562 pump F6B-9

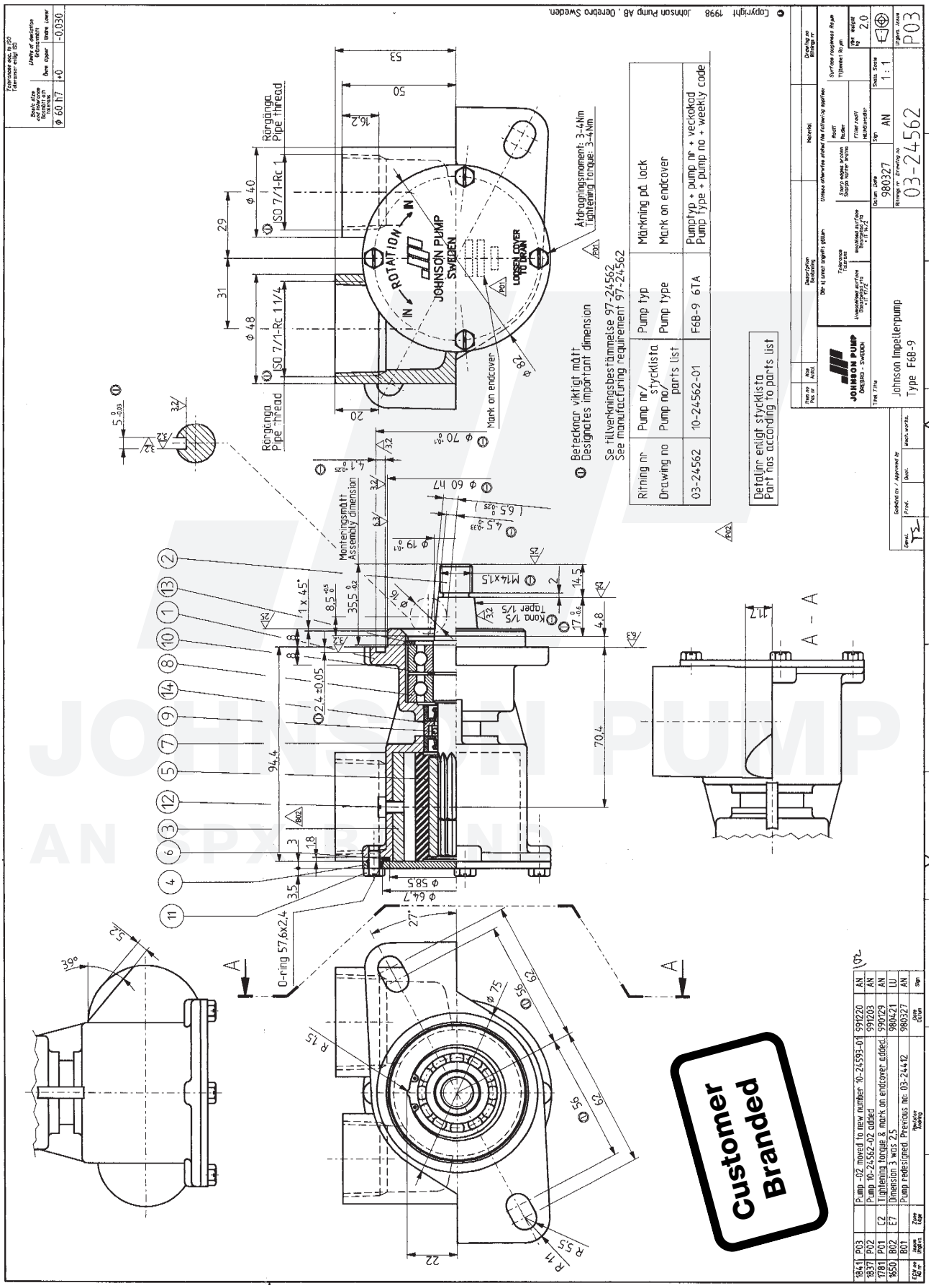

JOHNSON PUMP
AN SPX BRAND

F6B-9 Impeller pump
Art. No. 10-24563-01

Part no.	Description GB	Position	Quantity
01-24561-1	BODY F6B-9	1	1
01-35697	SHAFT F6B-9	2	1
01-45670	CAM 1/1 F6B-9	3	1
01-46723	END COVER F6B-9	4	1
08-812B	IMPELLER F6B-9	5	1
0.2173.475	O-RING 57.6X2.4 SS1586 NBR70	6	1
0.2233.001	LIP SEAL 16X28X7 DPSM	7	2
0.3431.444	BALL BEARING 6004 ST	8	2
0.2173.402	O-RING 15.3X2.4 SS1586 NBR70	9	1
0.0370.020	EXT. CIRCLIP D20 DIN471 ST	10	1
0.0141.502	SCREW M5X8 DIN933SLOTTED BRASS	11	4
0.0279.033	98145,451	12	1
98145,451	RETAIN. RING BORE D42 DIN472 SPRST	13	1
01-45181	WASHER F5/F7B-9	14	1

The product, i.e. concept, design and construction, is the property of SPX Johnson Pump Marine AB

10-24563 pump F6B-9

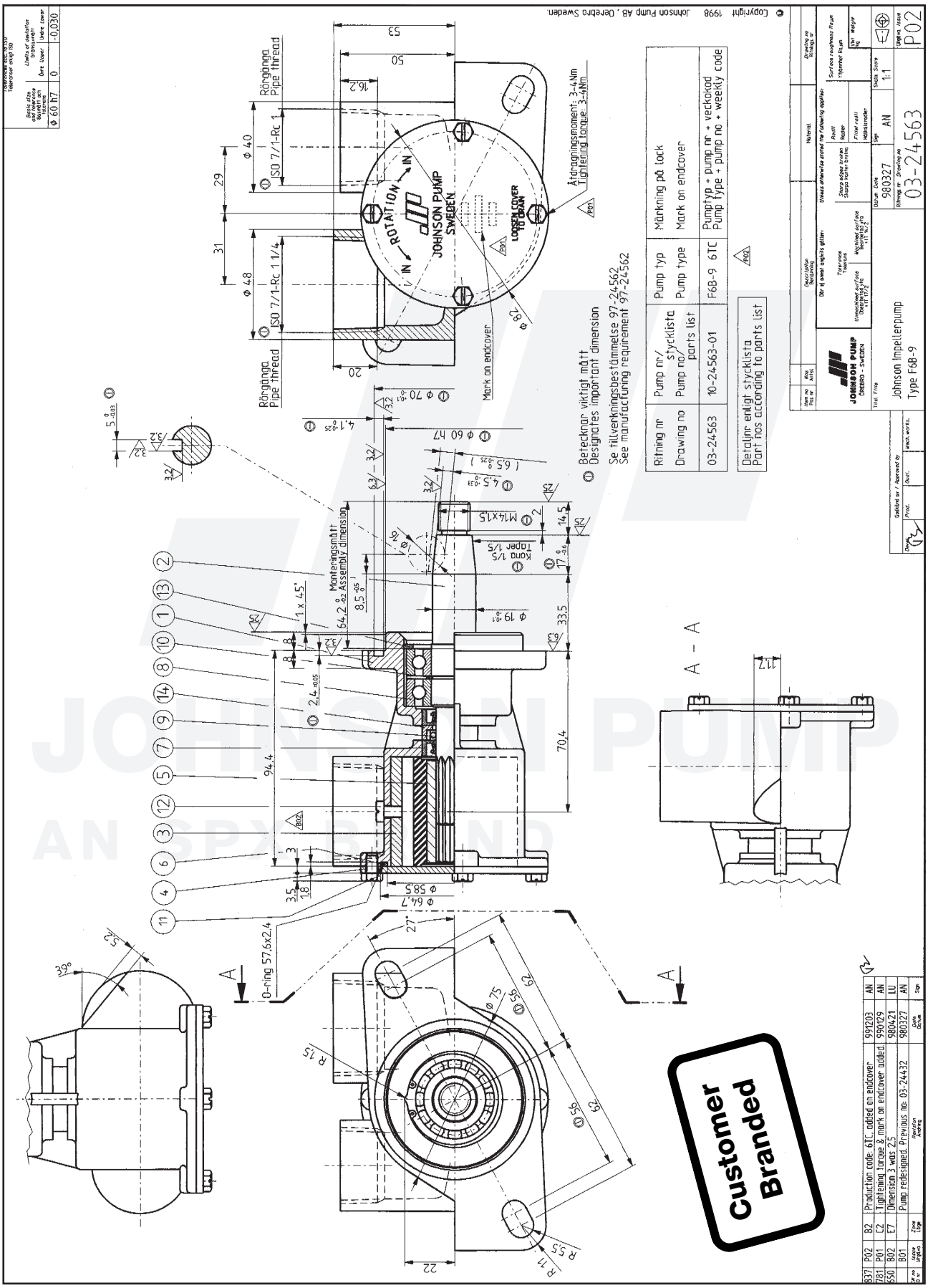

JOHNSON PUMP
AN SPX BRAND

F6B-9 Impeler pump
Art. No. 10-24593-01

Part. No.	Description GB	Position	Quantity
01-24561-1	BODY F6B-9	1	1
01-46268	SHAFT F6B	2	1
01-45670	CAM 1/1 F6B-9	3	1
01-46723	END COVER F6B-9	4	1
08-812B	IMPELLER F6B-9	5	1
0.2173.475	O-RING 57.6X2.4 SS1586 NBR70	6	1
0.2233.001	LIP SEAL 16X28X7 DPSM	7	2
05-08-520	BALL BEARING 6004-2RS1	8	2
0.2173.402	O-RING 15.3X2.4 SS1586 NBR70	9	1
0.0370.020	EXT. CIRCLIP D20 DIN471 ST	10	1
0.0141.502	SCREW M5X8 DIN933SLOTTED BRASS	11	4
0.0279.033	SCREW M5X8 ISO1207 BRASS	12	1
0.0371.042	RETAIN. RING BORE D42 DIN472 SPRST	13	1
01-45181	WASHER F5/F7B-9	14	1

JOHNSON PUMP
AN SPX BRAND

The product, i.e. concept, design and construction, is the property of SPX Johnson Pump Marine AB

10-24593 pump F6B-9

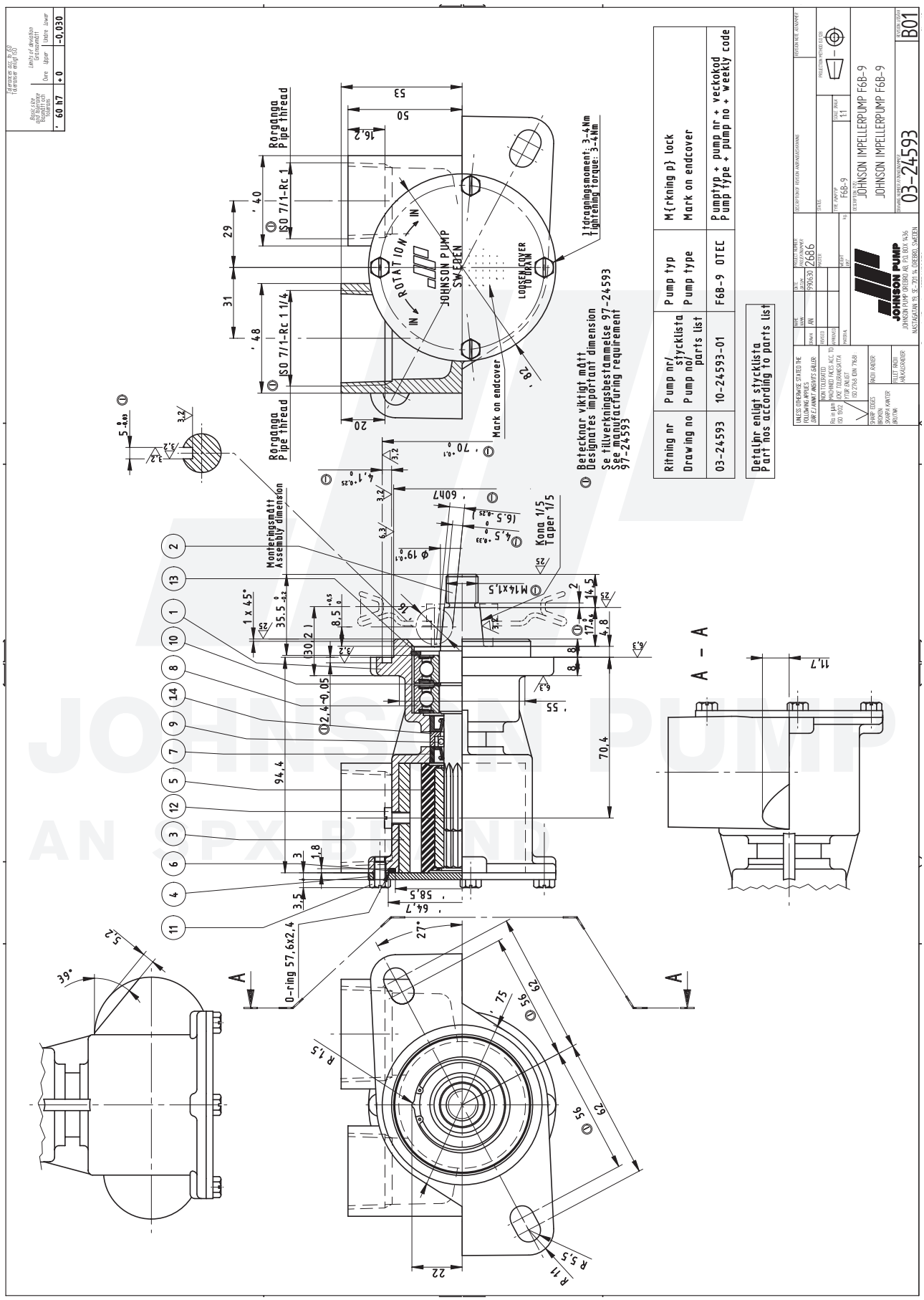

JOHNSON PUMP
AN SPX BRAND

F6B-9 Impeller pump
Art. No. 10-24633-01

Part. No.	Description GB	Position	Quantity
01-13304-1	PUMP BODY F6B-9	1	1
01-46964	SHAFT F6B-9	2	1
01-46556	END COVER F6B-9	3	1
08-812B	IMPELLER F6B-9	4	1
0.2173.475	O-RING 57.6X2.4 SS1586 NBR70	5	1
0.2247.022	MECH.SEAL COMPL D16	6	1
0.3431.778	BALL BEARING 6303-2RSH	7	2
0.2230.015	V-RING 15.5-17.5 NBR/65SH	8	1
0.0370.017	EXT. CIRCLIP D17 DIN471 ST	9	1
0.0141.502	SCREW M5X8 DIN933SLOTTED BRASS	10	4
0.0371.047	RETAIN. RING BORE D47 DIN472 SPRST	11	1
0.2234.016	LIP SEAL 25X47X7 BAUMSLX7 FPM	12	1
01-46009	SPACER F7B-9	13	1
01-45680	WASHER F5B/F6B/F7B	14	1
0.0370.516	EXT. CIRCLIP D16 DIN471 PHB	15	1
01-46969	WEARPLATE F6B	16	1
0.0633.708	PLUG TYPE 410050 D29.6MM DBI	0	2
0.3444.029	PLASTIC BAG 250X320 MM	0	1

The product, i.e. concept, design and construction, is the property of SPX Johnson Pump Marine AB

10-24633 pump F6B-9

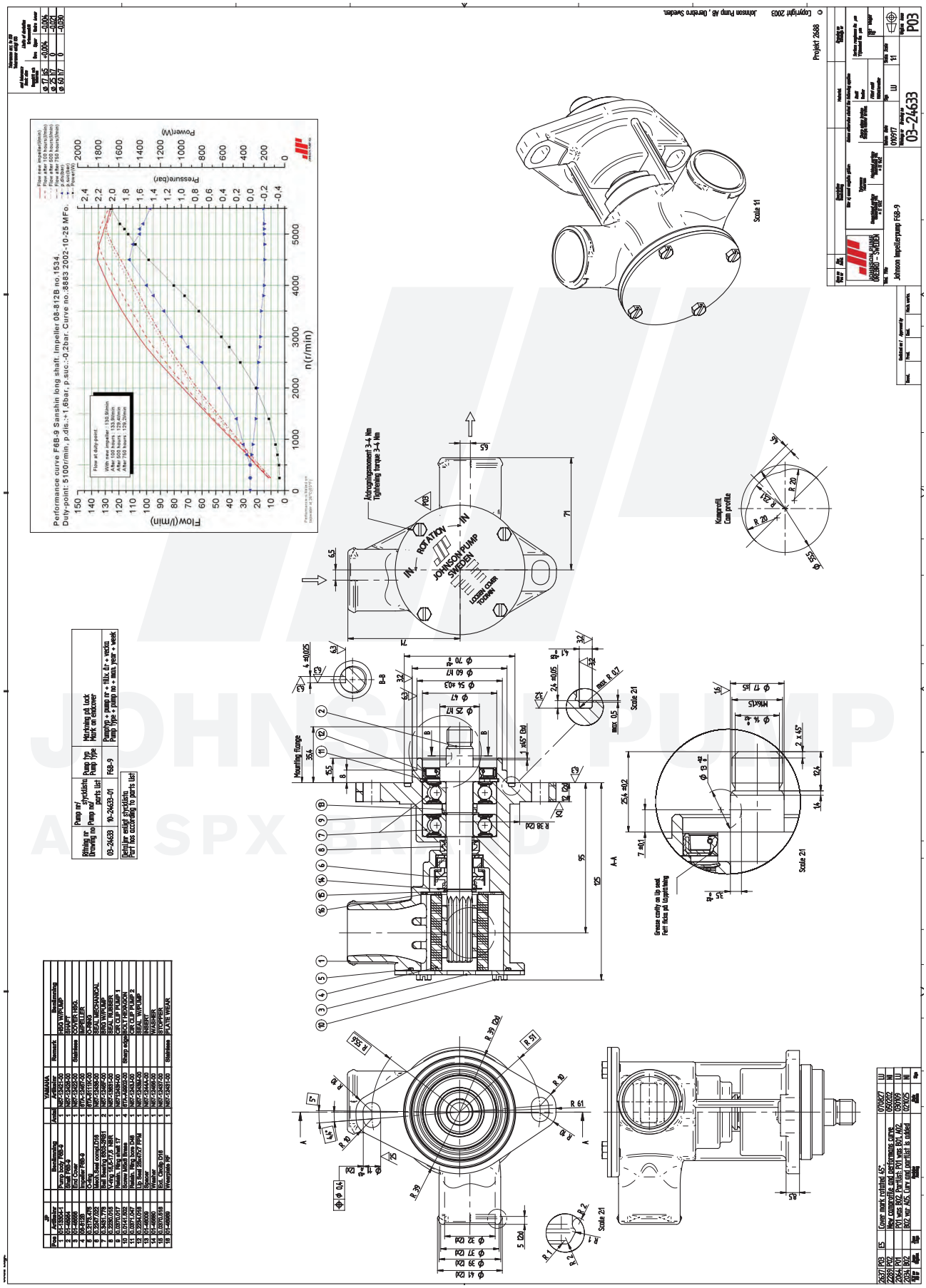

10-11236 pump F7B-9

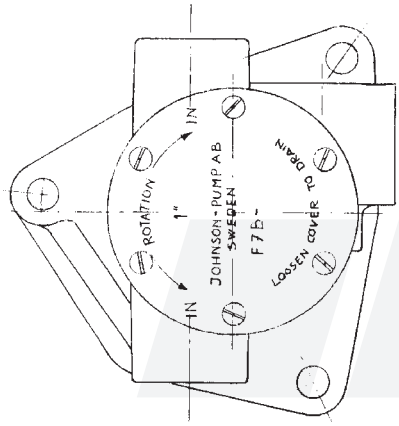

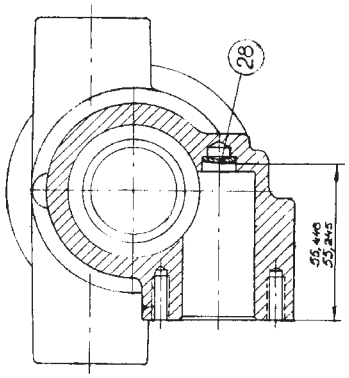

OBS!
Pumphusets (det. 4) anslutningsportar skall vara gängade med 1"–11½ NPSF

F7B-903 Impeller pump Kamhöjd 4,7 mm
Art. No. 10-11236-2

Position	Quantity	Part No
1	6	05-04-117
2	1	01-42441
3	1	01-42445
4	1	01-21862-1
5	1	01-42400
6	1	01-42442
7	1	01-42443
8	1	
9	1	05-20-115
10	1	
11	1	01-42402
12	1	05-29-125
13	2	01-42537
14	1	05-34-117
15	1	01-42538
16	1	01-42697
17	1	01-42536
18	1	01-11229
19	2	8/21/05
20	1	07-817766
21	1	05-04-105
22	1	05-05-115
23	1	05-01-115
24	1	05-34-105
25	2	01-42446
26	1	08-1028B
27	1	05-04-144
28	1	07-420143

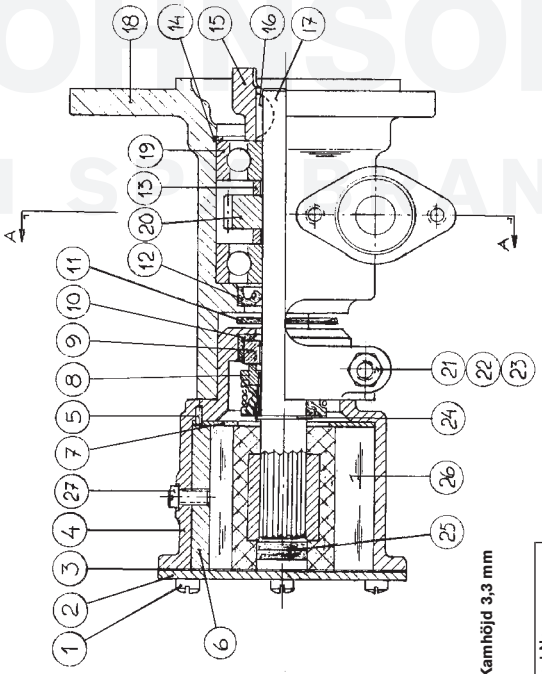

F7B-902 Impeller pump Kamhöjd 3,3 mm
Art. No. 10-11236-3

Position	Quantity	Part No
1	6	05-04-117
2	1	01-42441
3	1	01-42585
4	1	01-21862-1
5	1	01-42400
6	1	01-42584
7	1	01-42443
8	1	
9	1	05-20-115
10	1	
11	1	01-42402
12	1	05-29-125
13	2	01-42537
14	1	05-34-117
15	1	01-42538
16	1	01-42697
17	1	01-42536
18	1	01-11229
19	2	8/21/05
20	1	07-817766
21	1	05-04-105
22	1	05-05-115
23	1	05-01-115
24	1	05-34-105
25	2	01-42446
26	1	08-1028B
27	1	05-04-125
28	1	07-420143

Johnson-Metall
Titel: Impellerpump F7B-9 (1"P)
10-11236

JOHNSON PUMP
AN SPX BRAND

The product, i.e. concept, design and construction, is the property of SPX Johnson Pump Marine AB

JOHNSON PUMP
AN SPX BRAND

F7B-9 Impeller pump
Art. No 10-13374-1

Part. No.	Description GB	Position	Quantity
01-13375	PUMP BODY F7B-9 ECS	1	1
08-1028B	IMPELLER	2	1
01-24674	BEARING HOUSE ECS	3	1
01-36058	SHAFT F7B-9	4	1
0.0371.040	RETAIN. RING BORE D40 DIN472 SPRST	5	1
0.3431.742	BALL BEARING 6203 2 RS1 ST	7	2
01-47147	SPACER	8	1
0.0370.017	EXT. CIRCLIP D17 DIN471 ST	9	1
0.0252.030	ALLEN SCREW M8X12 DIN 912	10	4
0.2230.015	V-RING 15.5-17.5 NBR/65SH	11	1
0.2247.022	MECH.SEAL COMPL D16	12	1
01-45680	WASHER F5B/F6B/F7B	13	1
0.0370.516	EXT. CIRCLIP D16 DIN471 PHB	14	1
0.2172.012	O-RING 63,22X1,78 NBR70	15	1
01-24675	PULLEY ECS	16	1

The product, i.e. concept, design and construction, is the property of SPX Johnson Pump Marine AB

10-13374 pump F7B-9

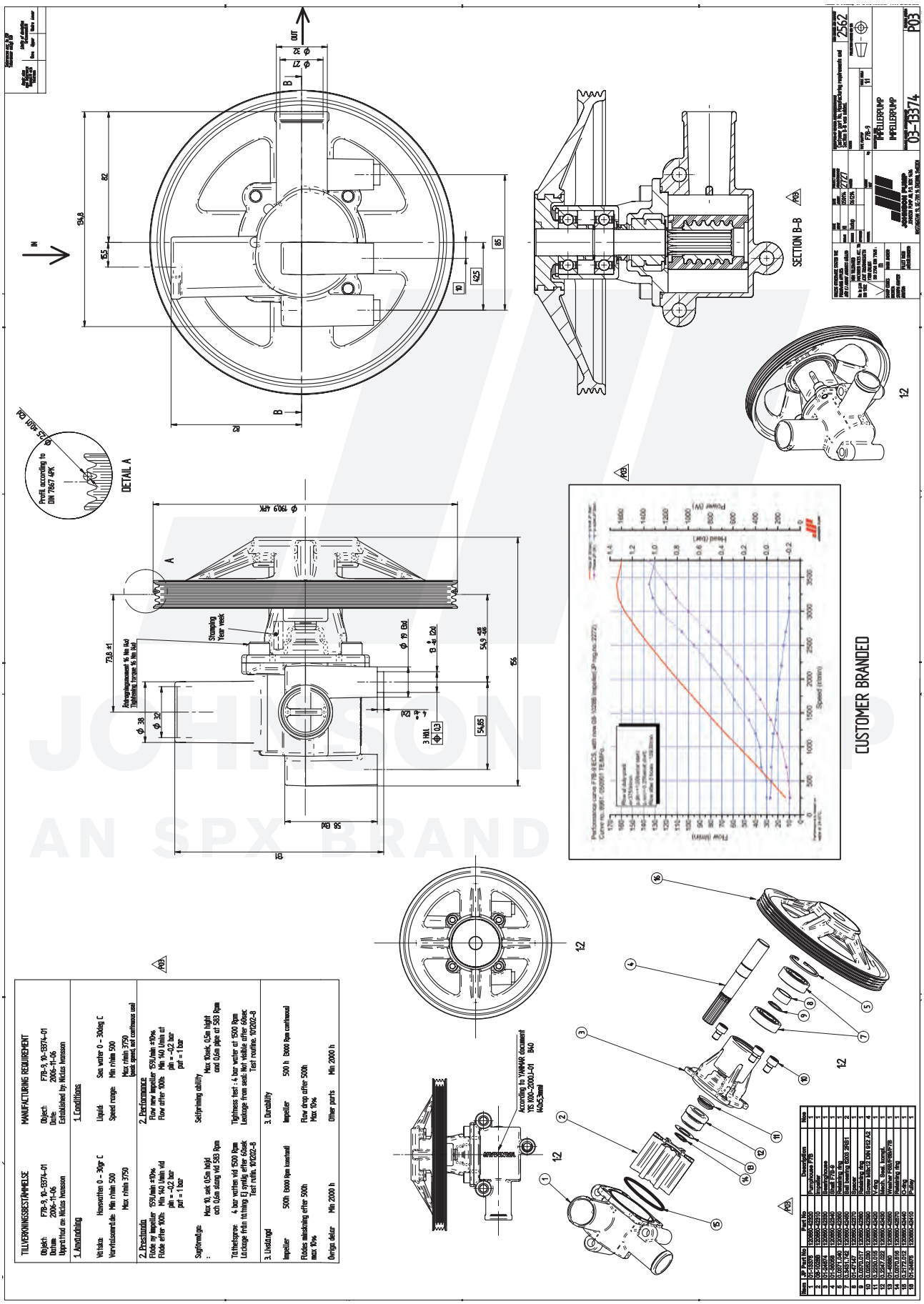

JOHNSON PUMP
AN SPX BRAND

10-21876 pump F7B-9

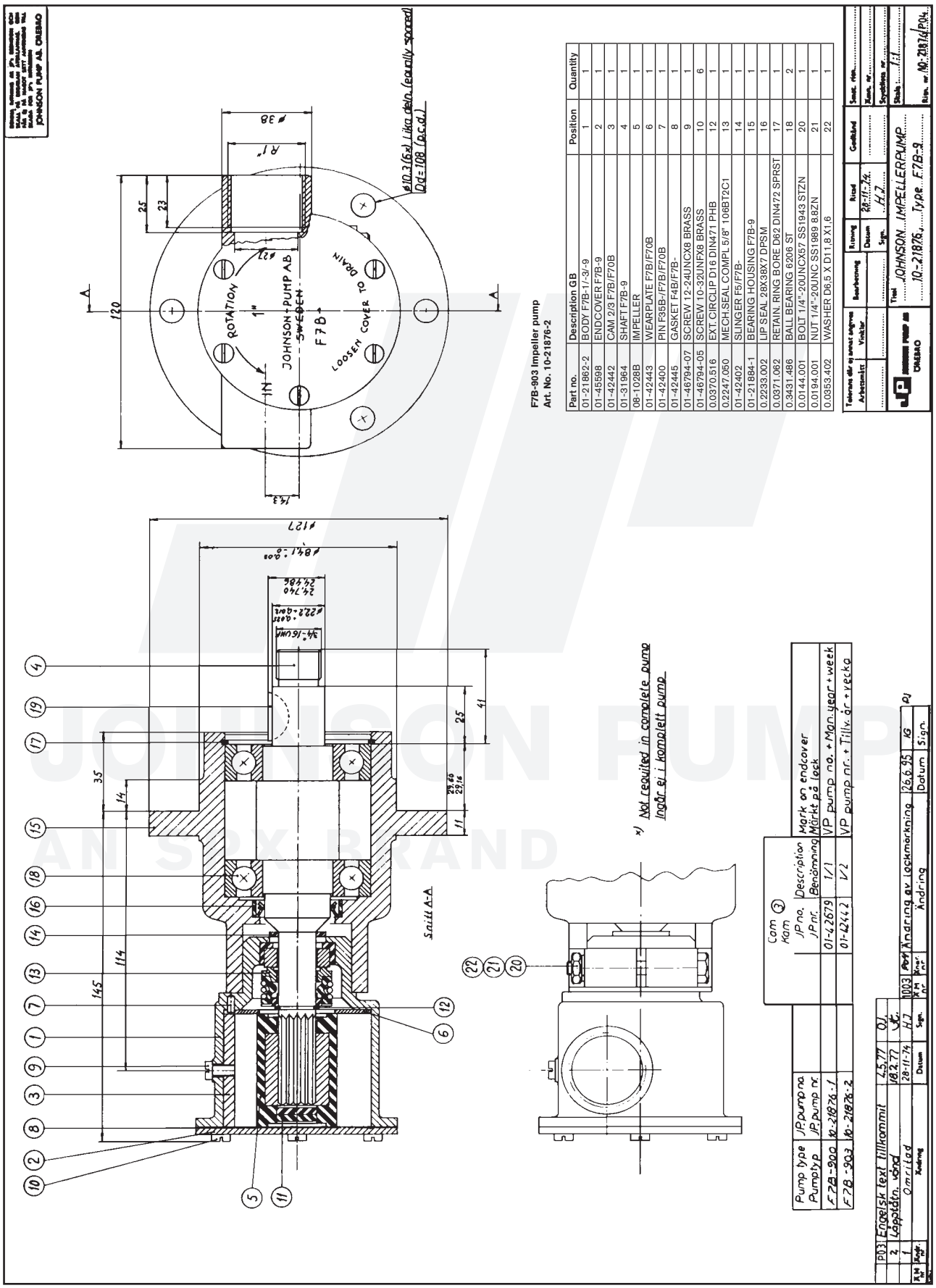

Part no.	Description GB	Position	Quantity
01-21862-2	BODY F7B-1/-3/-9	1	1
01-45598	ENDCOVER F7B-9	2	1
01-42442	CAM 2/3 F7B/F70B	3	1
01-31964	SHAFT F7B-9	4	1
08-1028B	IMPELLER	5	1
01-42443	WEARPLATE F7B/F70B	6	1
01-42400	PIN F35B-/F7B/F70B	7	1
01-42445	GASKET F4B/F7B-	8	1
01-46794-07	SCREW 12-24UNCX8 BRASS	9	1
01-46794-05	SCREW 10-32UNFX8 BRASS	10	6
0.0370.516	EXT.CIRCLIP D16 DIN471 PHB	12	1
0.2247.050	MECH.SEAL C/OMPL 5/8" 106BT2C1	13	1
01-42402	SLINGER F5/F7B-	14	1
01-21884-1	BEARING HOUSING F7B-9	15	1
0.2233.002	LIP SEAL 28X38X7 DPSM	16	1
0.0371.062	RETAIN. RING BORE D62 DIN472 SPRST	17	1
0.3431.486	BALL BEARING 6206 ST	18	2
0.0144.001	BOLT 1/4"-20UNCX57 SS1943 STZN	20	1
0.0194.001	NUT 1/4"-20UNC SS1989 8.8ZN	21	1
0.0353.402	WASHER D6,5 X D11,8 X1,6	22	1

The product, i.e. concept, design and construction, is the property of SPX Johnson Pump Marine AB

10-22144 pump F7B-9

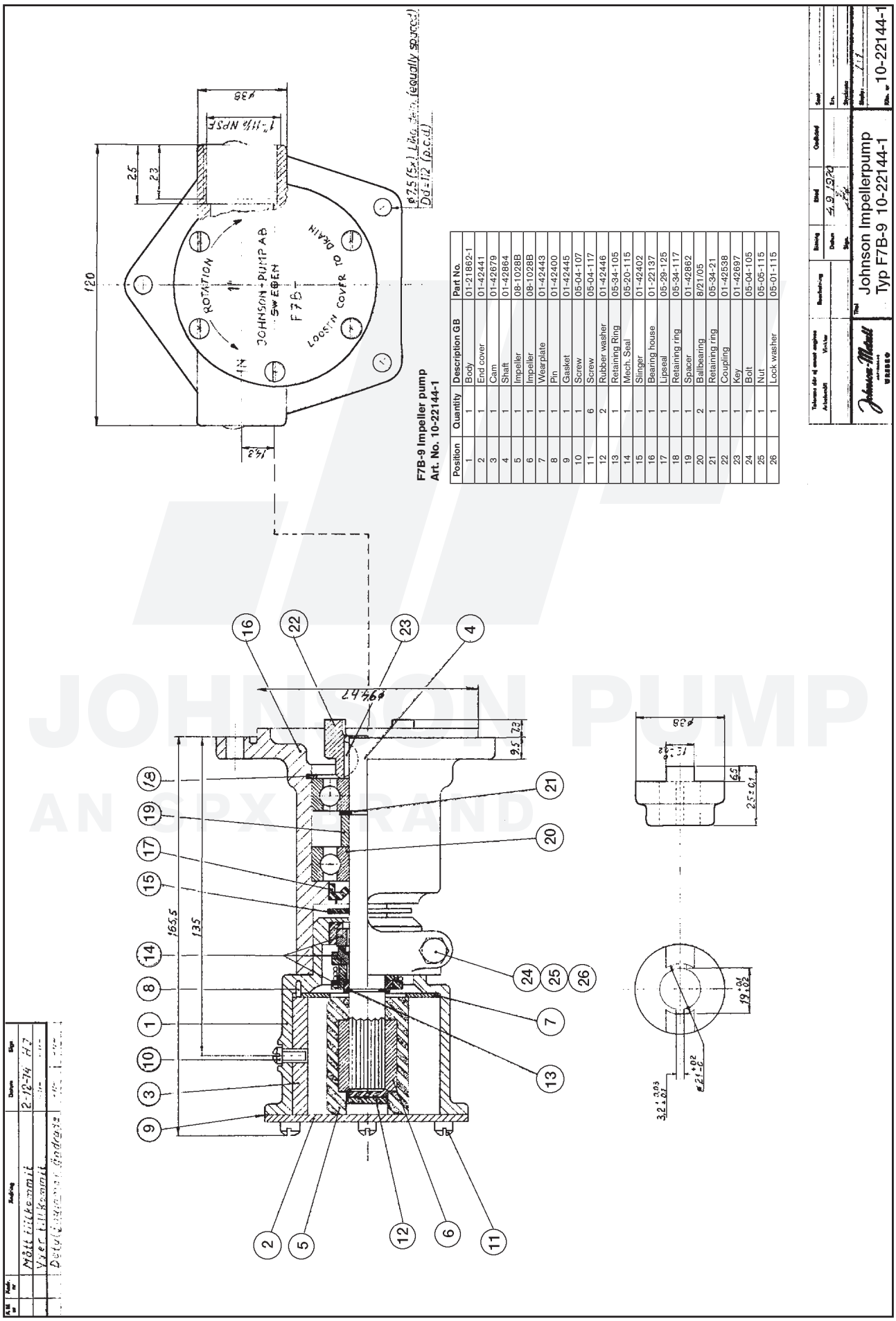

F7B-9 Impeller pump
Art. No. 10-22144-1

Position	Quantity	Description GB	Part No.
1	1	Body	01-21862-1
2	1	End cover	01-42441
3	1	Cam	01-42679
4	1	Shaft	01-42864
5	1	Impeller	08-1028B
6	1	Impeller	08-1028B
7	1	Wearplate	01-42443
8	1	Pin	01-42400
9	1	Gasket	01-42445
10	1	Screw	05-04-107
11	6	Screw	05-04-117
12	2	Rubber washer	01-42446
13	1	Retaining Ring	05-34-105
14	1	Mech. Seal	05-20-115
15	1	Slinger	01-42402
16	1	Bearing house	01-22137
17	1	Lipseal	05-29-125
18	1	Retaining ring	05-34-117
19	1	Spacer	01-42862
20	2	Ballbearing	8/21/05
21	1	Retaining ring	05-34-21
22	1	Coupling	01-42538
23	1	Key	01-42697
24	1	Bolt	05-04-105
25	1	Nut	05-05-115
26	1	Lock washer	05-01-115

JOHNSON PUMP
AN SPX BRAND

10-22147 pump F7B-903

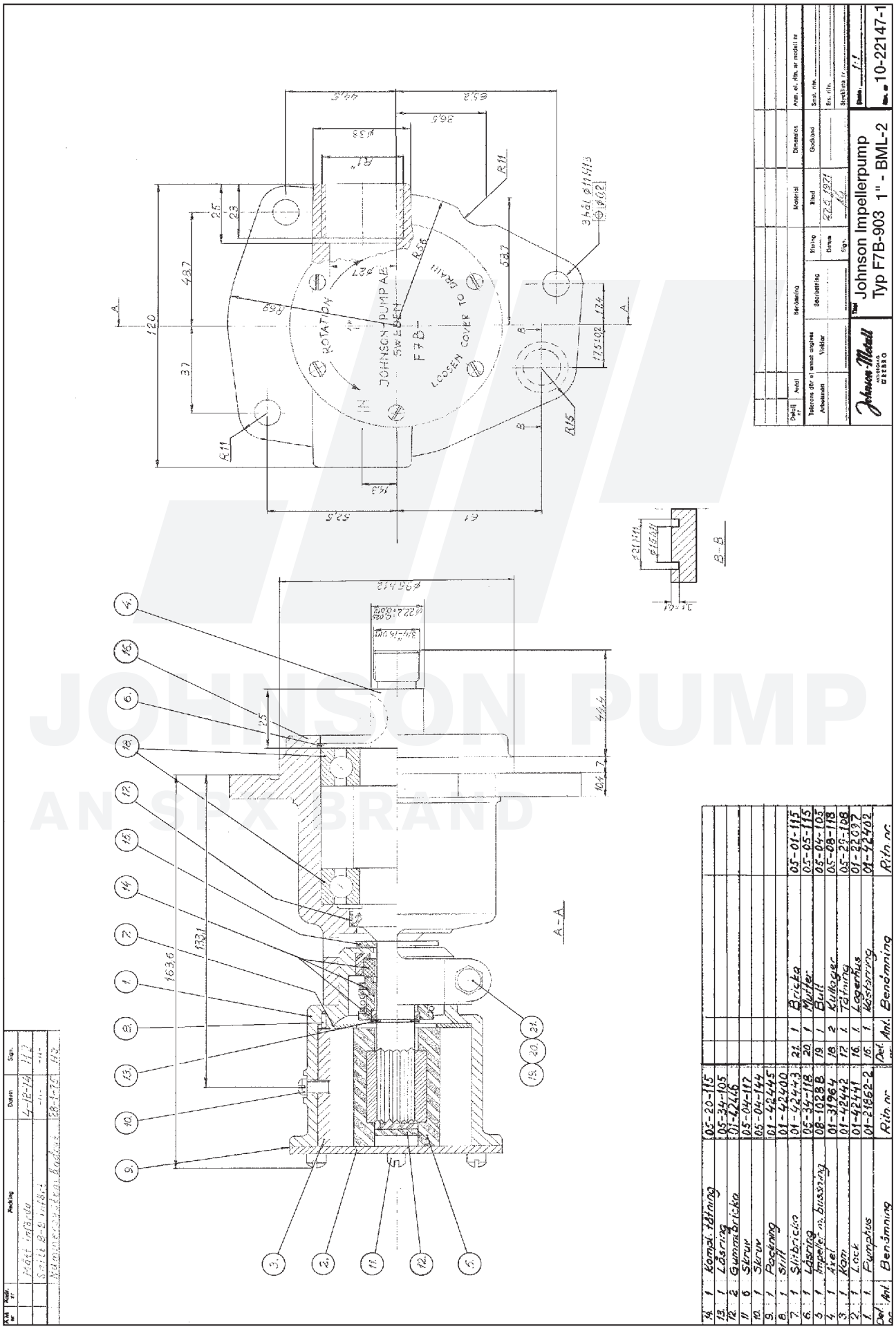

JOHNSON PUMP
AN SPX BRAND

The product, i.e. concept, design and construction, is the property of SPX Johnson Pump Marine AB

10-22335 pump F7B-9

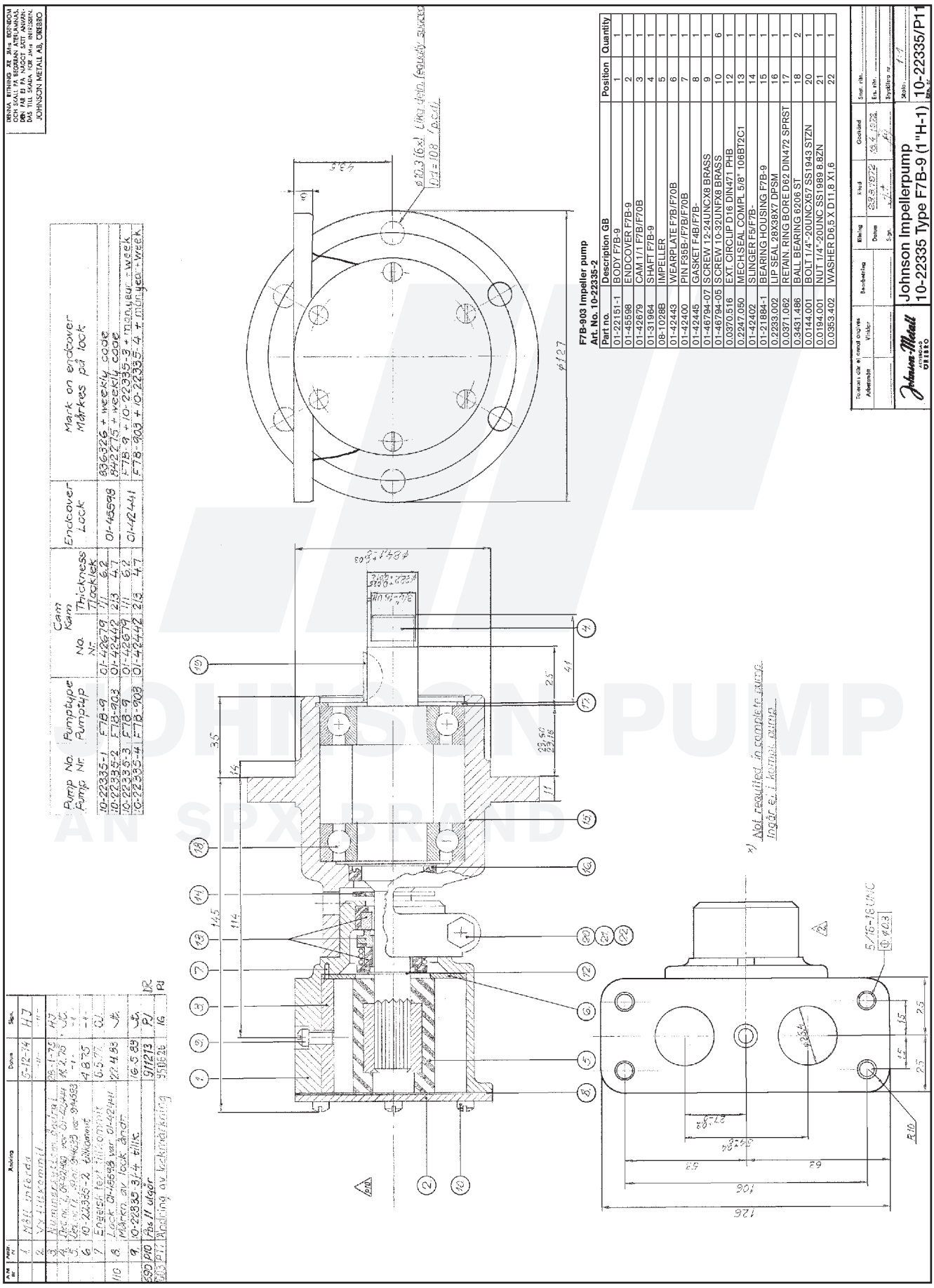

10-22354 pump F7B-9

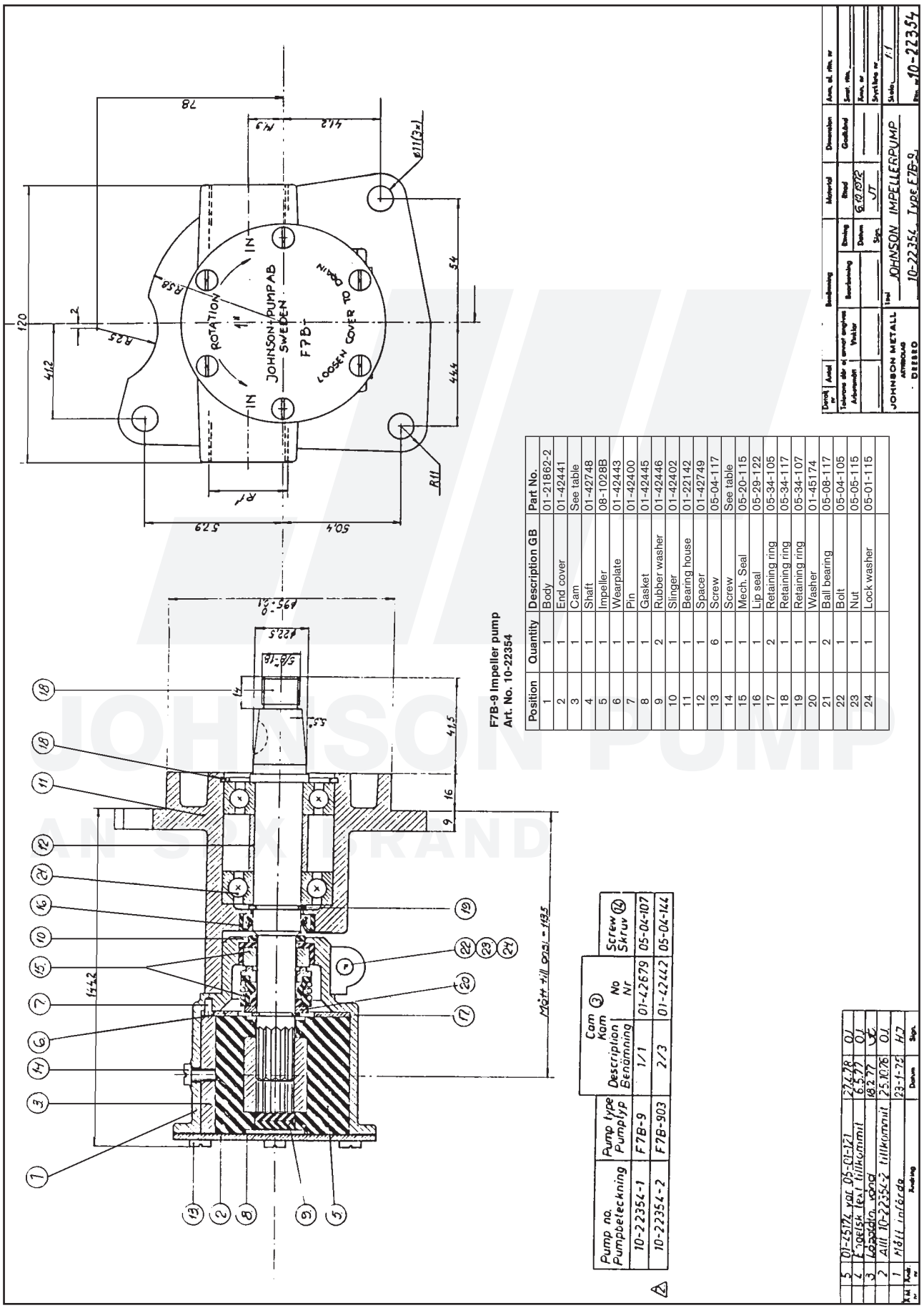

F7B-9 Impeller pump
Art. No. 10-22354

Position	Quantity	Description GB	Part No.
1	1	Body	01-21862-2
2	1	End cover	01-42441
3	1	Cam	See table
4	1	Shaft	01-42748
5	1	Impeller	08-1028B
6	1	Wearplate	01-42443
7	1	Pin	01-42400
8	1	Gasket	01-42445
9	2	Rubber washer	01-42446
10	1	Slinger	01-42402
11	1	Bearing house	01-22142
12	1	Spacer	01-42749
13	6	Screw	05-04-117
14	1	Screw	See table
15	1	Mech. Seal	05-20-115
16	1	Lip seal	05-29-122
17	2	Retaining ring	05-34-105
18	1	Retaining ring	05-34-117
19	1	Retaining ring	05-34-107
20	1	Washer	01-45174
21	2	Ball bearing	05-08-117
22	1	Bolt	05-04-105
23	1	Nut	05-05-115
24	1	Lock washer	05-01-115

Pump no. Pumpbeteckning	Pump type Pumptyp	Cam Kam Description Benämning	No Nr	Screw Skruv (14)
10-22354-1	F7B-9	1/1	01-42679	05-04-107
10-22354-2	F7B-903	2/3	01-42442	05-04-144

Nr	Ändring	Datum	Sign.
5	01-25174 ytat 05-01-121	27.4.78	OJ
4	Polsk text tillkommit	6.5.77	OJ
3	Kopplda. sänd	18.2.77	JC
2	Allt 10-22354-2 tillkommit	25.10.76	OJ
1	Mått infärda	23-1-75	HJ

The product, i.e. concept, design and construction, is the property of SPX Johnson Pump Marine AB

10-24014 pump F7B-9

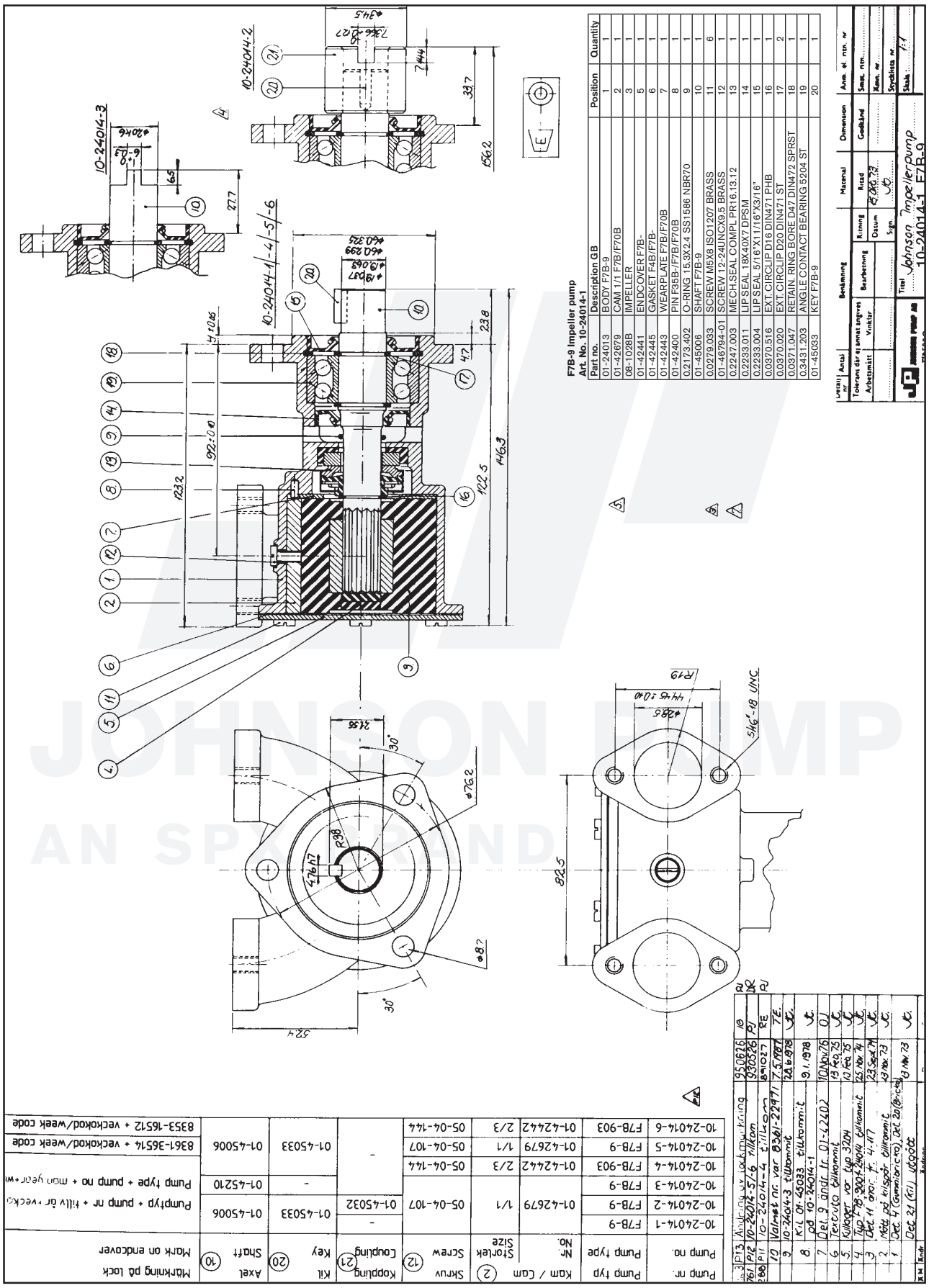

10-24017 pump F7B-9

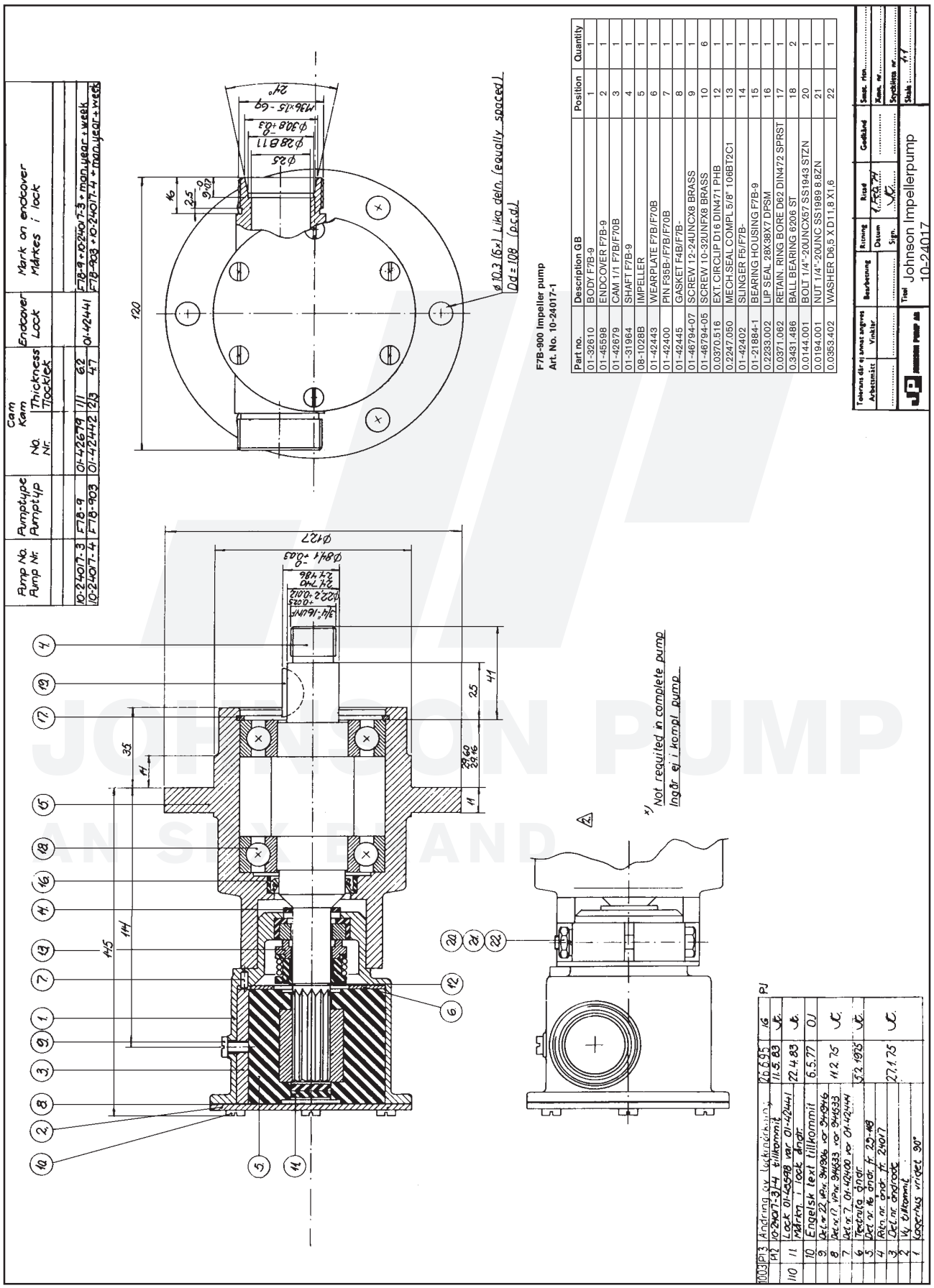

Part no.	Description GB	Position	Quantity
01-32610	BODY F7B-9	1	1
01-45598	ENDCOVER F7B-9	2	1
01-42679	CAM 1/1 F7B/F70B	3	1
01-31964	SHAFT F7B-9	4	1
08-1028B	IMPELLER	5	1
01-42443	WEARPLATE F7B/F70B	6	1
01-42400	PIN F35B-/F7B/F70B	7	1
01-42445	GASKET F4B/F7B-	8	1
01-46794-07	SCREW 12-24UNCX8 BRASS	9	1
01-46794-05	SCREW 10-32UNFX8 BRASS	10	6
0.0370.516	EXT. CIRCLIP D16 DIN471 PHB	12	1
0.2247.050	MECH.SEAL COMPL 5/8" 106BT2C1	13	1
01-42402	SLINGER F5/F7B-	14	1
01-21884-1	BEARING HOUSING F7B-9	15	1
0.2233.002	LIP SEAL 28X38X7 DPSM	16	1
0.0371.062	RETAIN. RING BORE D62 DIN472 SPRST	17	1
0.3431.486	BALL BEARING 6206 ST	18	2
0.0144.001	BOLT 1/4"-20UNCX57 SS1943 STZN	20	1
0.0194.001	NUT 1/4"-20UNC SS1989 8.8ZN	21	1
0.0353.402	WASHER D6,5 X D11,8 X1,6	22	1

JOHNSON PUMP
AN SPX BRAND

The product, i.e. concept, design and construction, is the property of SPX Johnson Pump Marine AB

10-24020 pump F7B-9

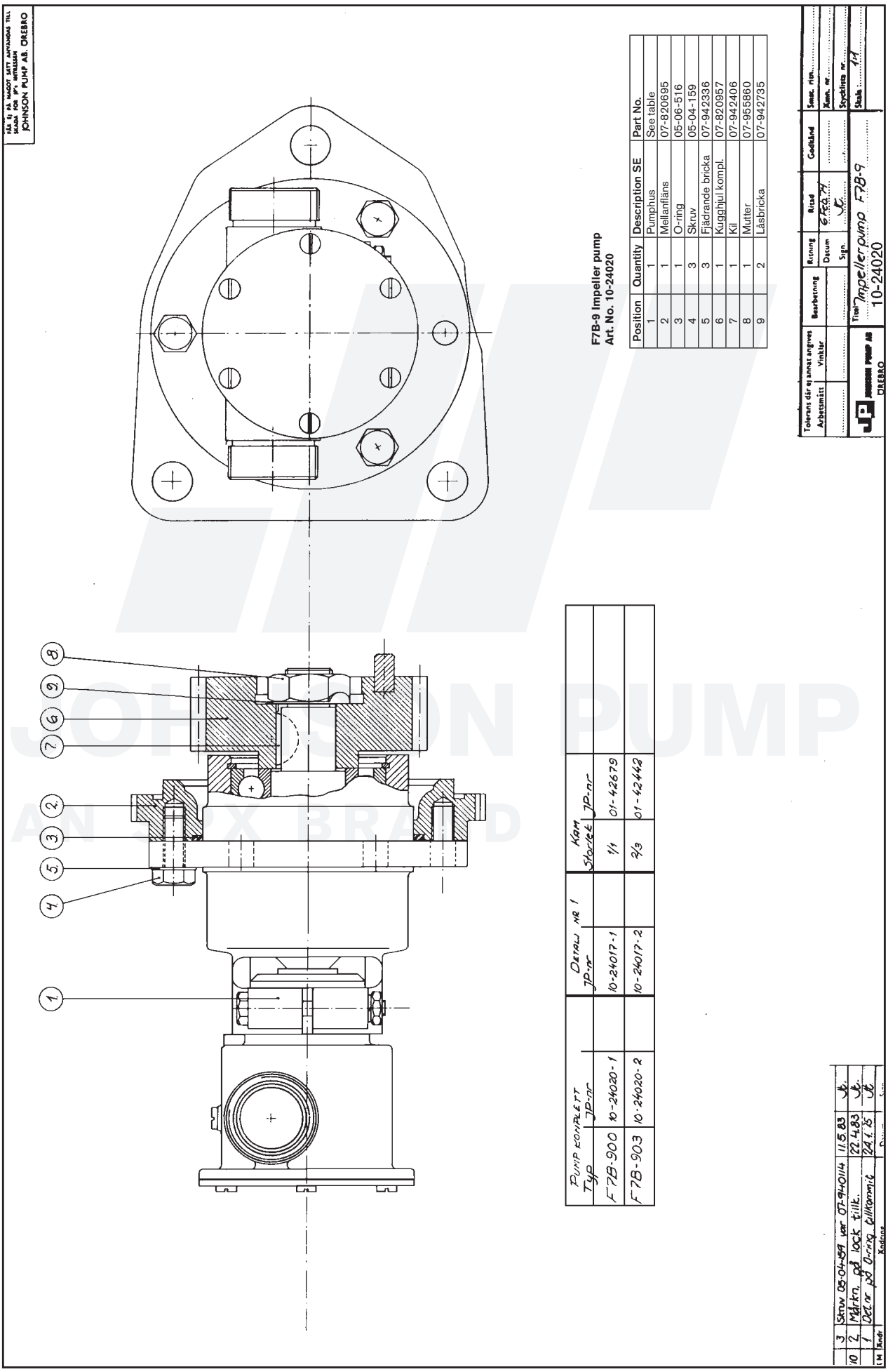

Position	Quantity	Description SE	Part No.
1	1	Pumphus	See table
2	1	Mellanläns	07-820695
3	1	O-ring	05-06-516
4	3	Skruv	05-04-159
5	3	Fjädrande bricka	07-942336
6	1	Kugghjul kompl.	07-820957
7	1	Kil	07-942406
8	1	Mutter	07-955860
9	2	Låsbricka	07-942735

JOHNSON PUMP
AN SPX BRAND

10-24028 pump F7B-903

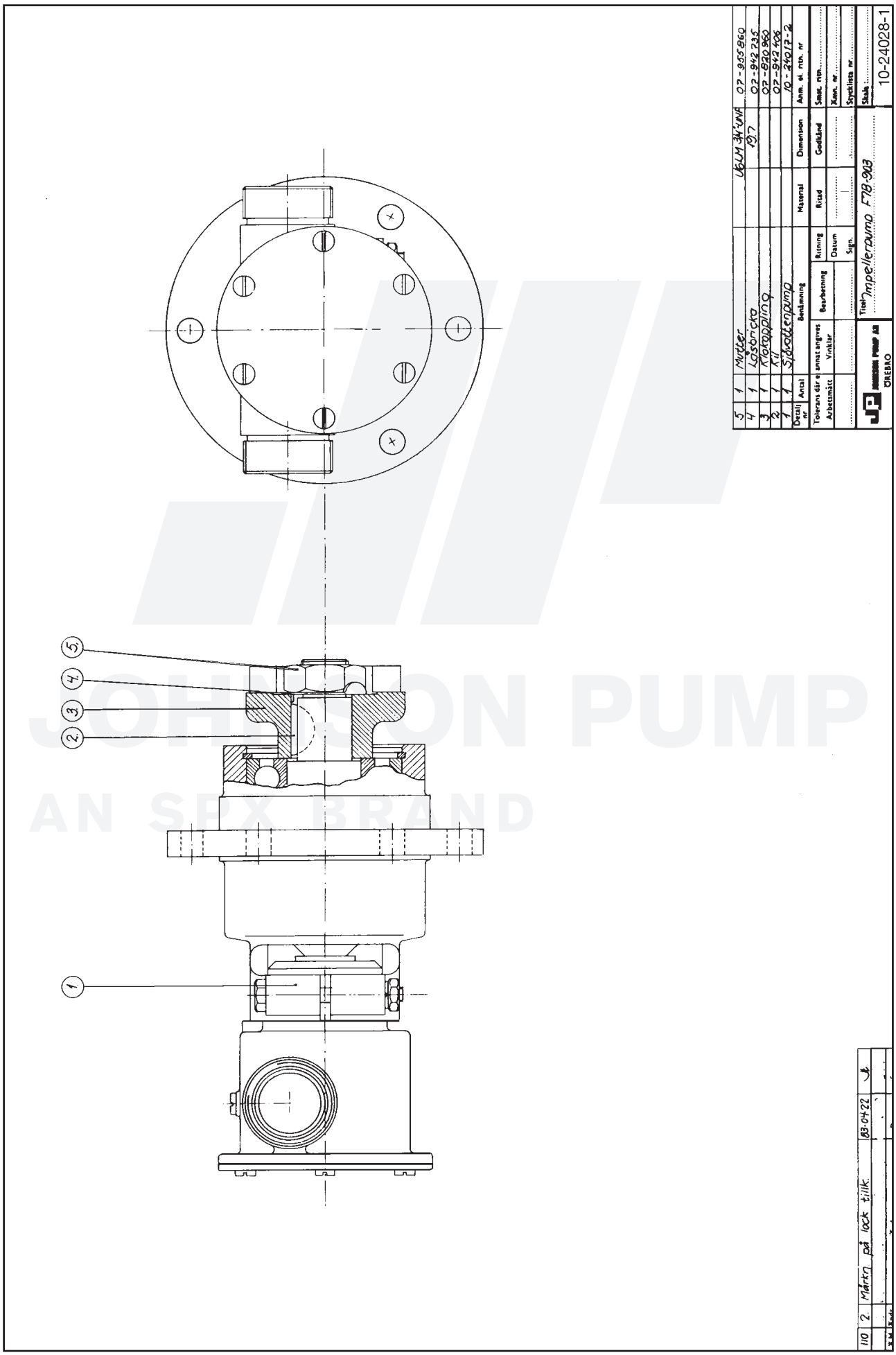

JOHNSON PUMP
AN SPX BRAND

The product, i.e. concept, design and construction, is the property of SPX Johnson Pump Marine AB

10-24057 pump F7B-903

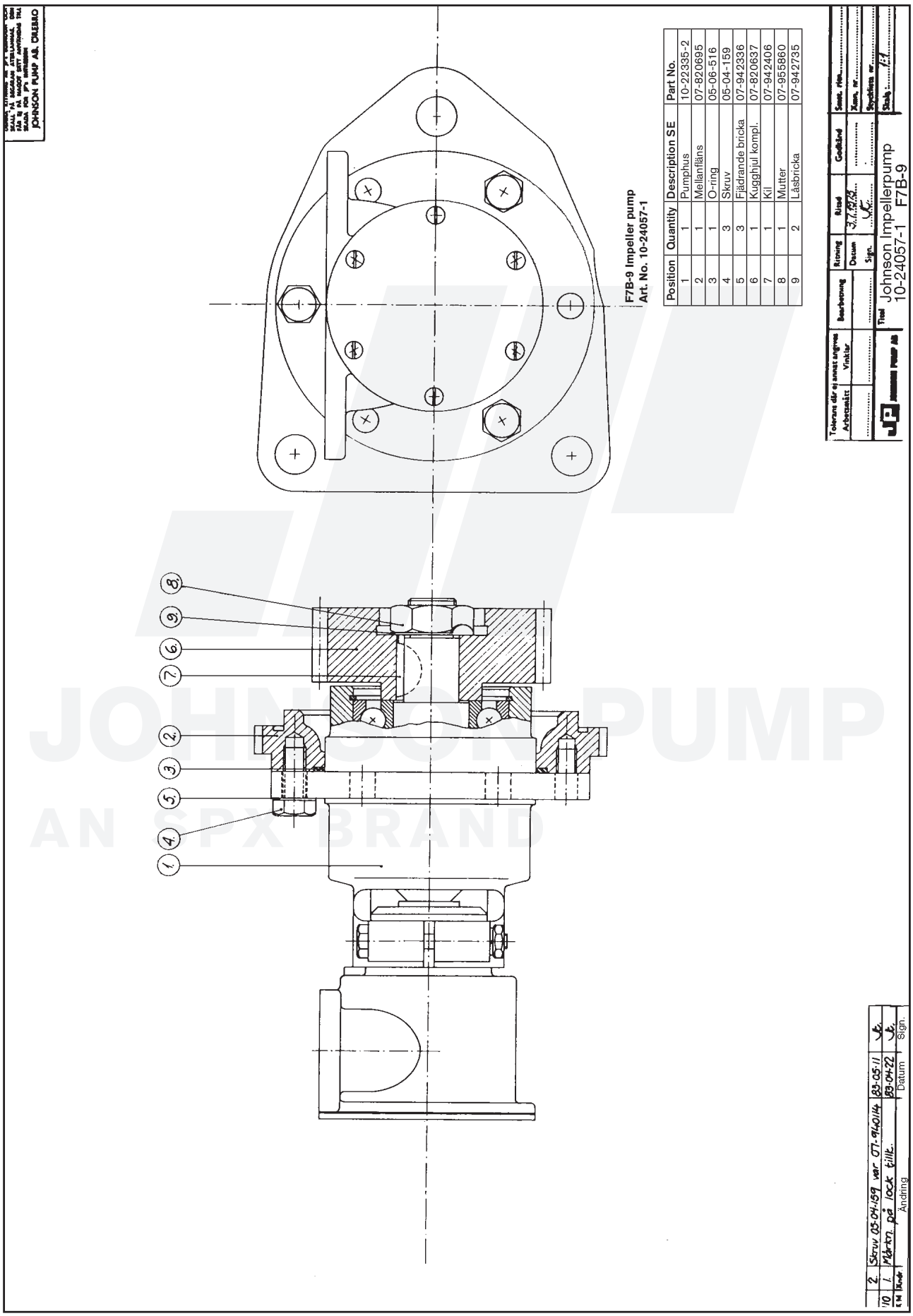

Position	Quantity	Description SE	Part No.
1	1	Pumphus	10-22335-2
2	1	Mellanfläns	07-820695
3	1	O-ring	05-06-516
4	3	Skruv	05-04-159
5	3	Fjädrande bricka	07-942336
6	1	Kugghjul kompl.	07-820637
7	1	Kil	07-942406
8	1	Mutter	07-955860
9	2	Låsbricka	07-942735

Ändring	Datum	Sign.
2. Skruv 05-04-159 var 07-940114	93-05-11	
1. Märkn. på lock tillk.	93-04-22	

JOHNSON PUMP
AN SPX BRAND

10-24061 pump F7B-9

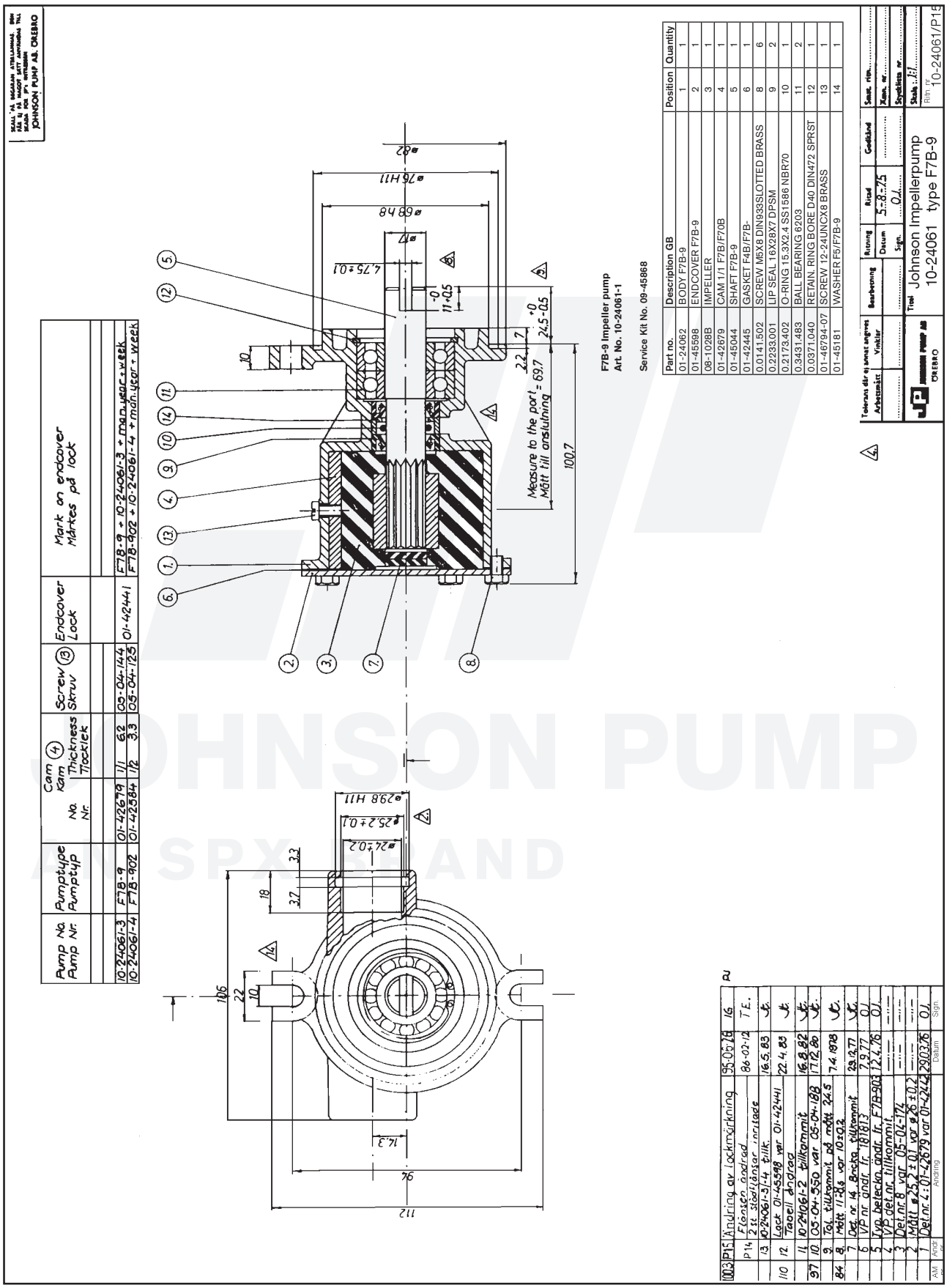

Part no.	Description GB	Position	Quantity
01-24062	BODY F7B-9	1	1
01-45598	ENDCOVER F7B-9	2	1
08-1028B	IMPELLER	3	1
01-42679	CAM 1/1 F7B/F70B	4	1
01-45044	SHAFT F7B-9	5	1
01-42445	GASKET F4B/F7B-	6	1
0.0141.502	SCREW M5X8 DIN933SLOTTED BRASS	8	6
0.2233.001	LIP SEAL 16X28X7 DPSM	9	2
0.2173.402	O-RING 15.3X2.4 SS1586 NBR70	10	1
0.3431.483	BALL BEARING 6203	11	2
0.0371.040	RETAIN. RING BORE D40 DIN472 SPRST	12	1
01-46794-07	SCREW 12-24UNCX8 BRASS	13	1
01-45181	WASHER F5/F7B-9	14	1

JOHNSON PUMP
A SPX BRAND

The product, i.e. concept, design and construction, is the property of SPX Johnson Pump Marine AB

10-24103 pump F7B-9

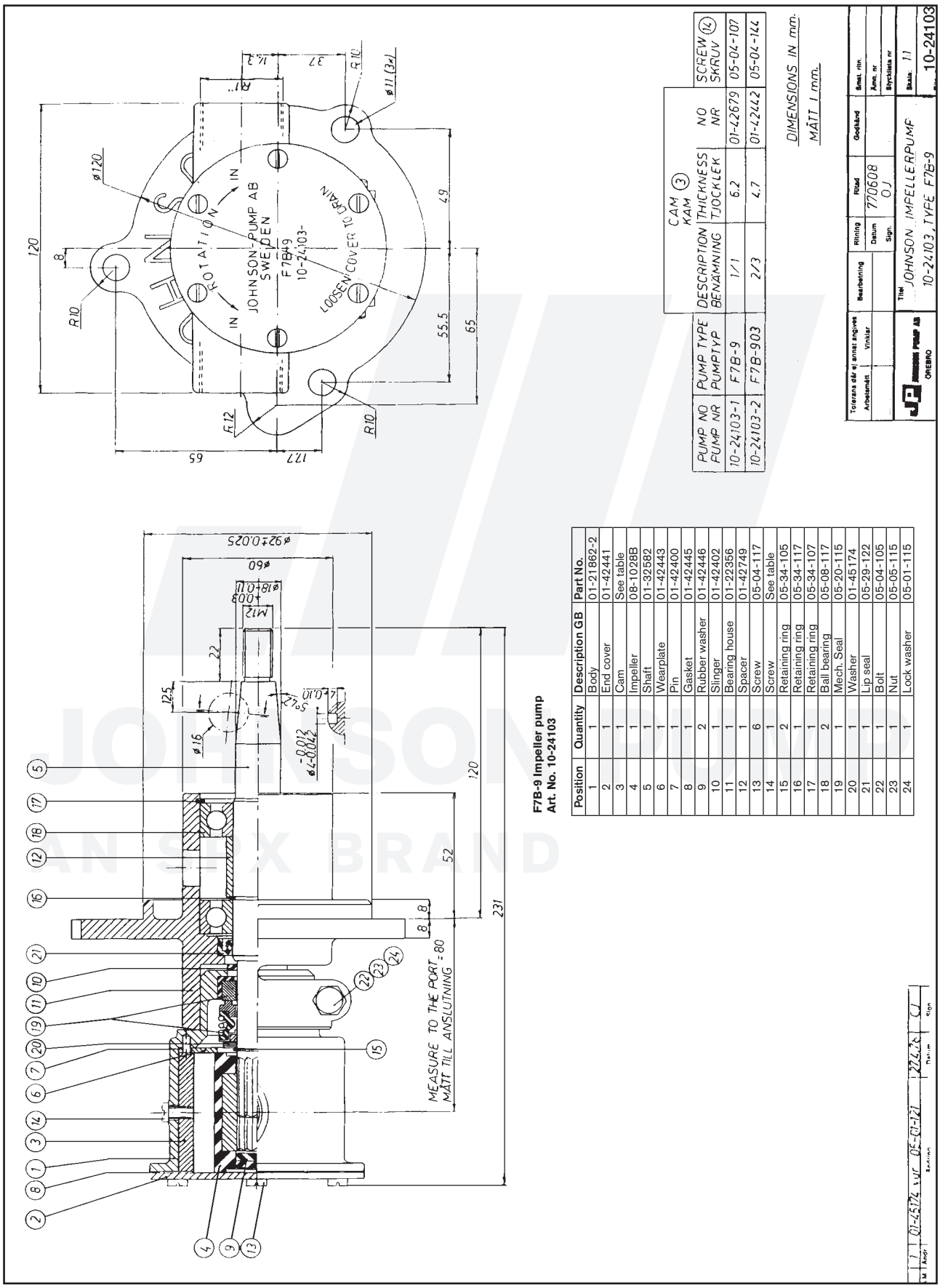

PUMP NO PUMP NR	PUMP TYPE PUMPTYP	DESCRIPTION BENÄMNING	CAM KAM ③ THICKNESS TJOCKLEK	NO NR	SCREW ⑫ SKRUV
10-24103-1	F7B-9	1/1	6.2	01-42679	05-04-107
10-24103-2	F7B-903	2/3	4.7	01-42442	05-04-144

F7B-9 Impeller pump
Art. No. 10-24103

Position	Quantity	Description GB	Part No.
1	1	Body	01-21862-2
2	1	End cover	01-42441
3	1	Cam	See table
4	1	Impeller	08-1028B
5	1	Shaft	01-32582
6	1	Wearplate	01-42443
7	1	Pin	01-42400
8	1	Gasket	01-42445
9	2	Rubber washer	01-42446
10	1	Slinger	01-42402
11	1	Bearing house	01-22356
12	1	Spacer	01-42749
13	6	Screw	05-04-117
14	1	Screw	See table
15	2	Retaining ring	05-34-105
16	1	Retaining ring	05-34-117
17	1	Retaining ring	05-34-107
18	2	Ball bearing	05-08-117
19	1	Mech. Seal	05-20-115
20	1	Washer	01-45174
21	1	Lip seal	05-29-122
22	1	Bolt	05-04-105
23	1	Nut	05-05-115
24	1	Lock washer	05-01-115

JOHNSON PUMP
AN SPX BRAND

10-24126 pump F7B-903

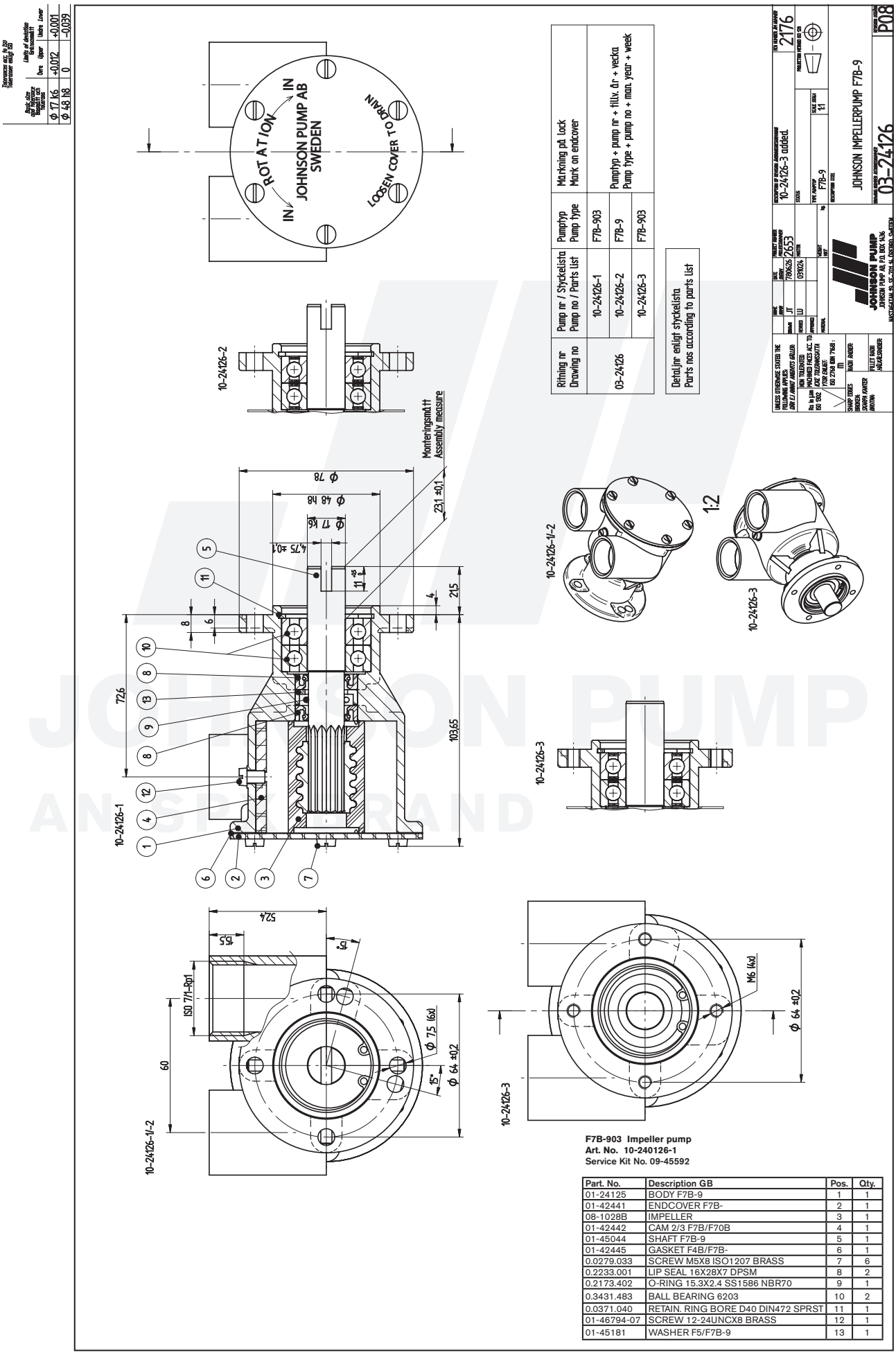

F7B-903 Impeller pump
Art. No. 10-240126-1
Service Kit No. 09-45592

Part. No.	Description GB	Pos.	Qty.
01-24125	BODY F7B-9	1	1
01-42441	ENDCOVER F7B-	2	1
08-1028B	IMPELLER	3	1
01-42442	CAM 2/3 F7B/F70B	4	1
01-45044	SHAFT F7B-9	5	1
01-42445	GASKET F4B/F7B-	6	1
0.0279.033	SCREW M5X8 ISO1207 BRASS	7	6
0.2233.001	LIP SEAL 16X28X7 DPSM	8	2
0.2173.402	O-RING 15.3X2.4 SS1586 NBR70	9	1
0.3431.483	BALL BEARING 6203	10	2
0.0371.040	RETAIN. RING BORE D40 DIN472 SPRST	11	1
01-46794-07	SCREW 12-24UNCX8 BRASS	12	1
01-45181	WASHER F5/F7B-9	13	1

The product, i.e. concept, design and construction, is the property of SPX Johnson Pump Marine AB

JOHNSON PUMP
AN SPX BRAND

F7B-9 Impeller pump
Art. No 10-24127-1

Service Kit No. 09-45592

Part. No.	Description GB	Position	Quantity
01-42441	ENDCOVER F7B-	1	1
01-24125	BODY F7B-9	2	1
01-42445	GASKET F4B/F7B-	3	1
08-1028B	IMPELLER	4	1
01-42679	CAM 1/1 F7B/F70B	5	1
01-45248	SHAFT F7B-9	6	1
0.3431.483	BALL BEARING 6203	7	2
0.0279.033	SCREW M5X8 ISO1207 BRASS	8	6
0.2233.001	LIP SEAL 16X28X7 DPSM	9	2
0.2173.402	O-RING 15.3X2.4 SS1586 NBR70	10	1
0.0371.040	RETAIN. RING BORE D40 DIN472 SPRST	11	1
01-46794-01	SCREW 12-24UNCX9.5 BRASS	12	1
01-45181	WASHER F5/F7B-9	13	1

The product, i.e. concept, design and construction, is the property of SPX Johnson Pump Marine AB

10-24127 pump F7B-9

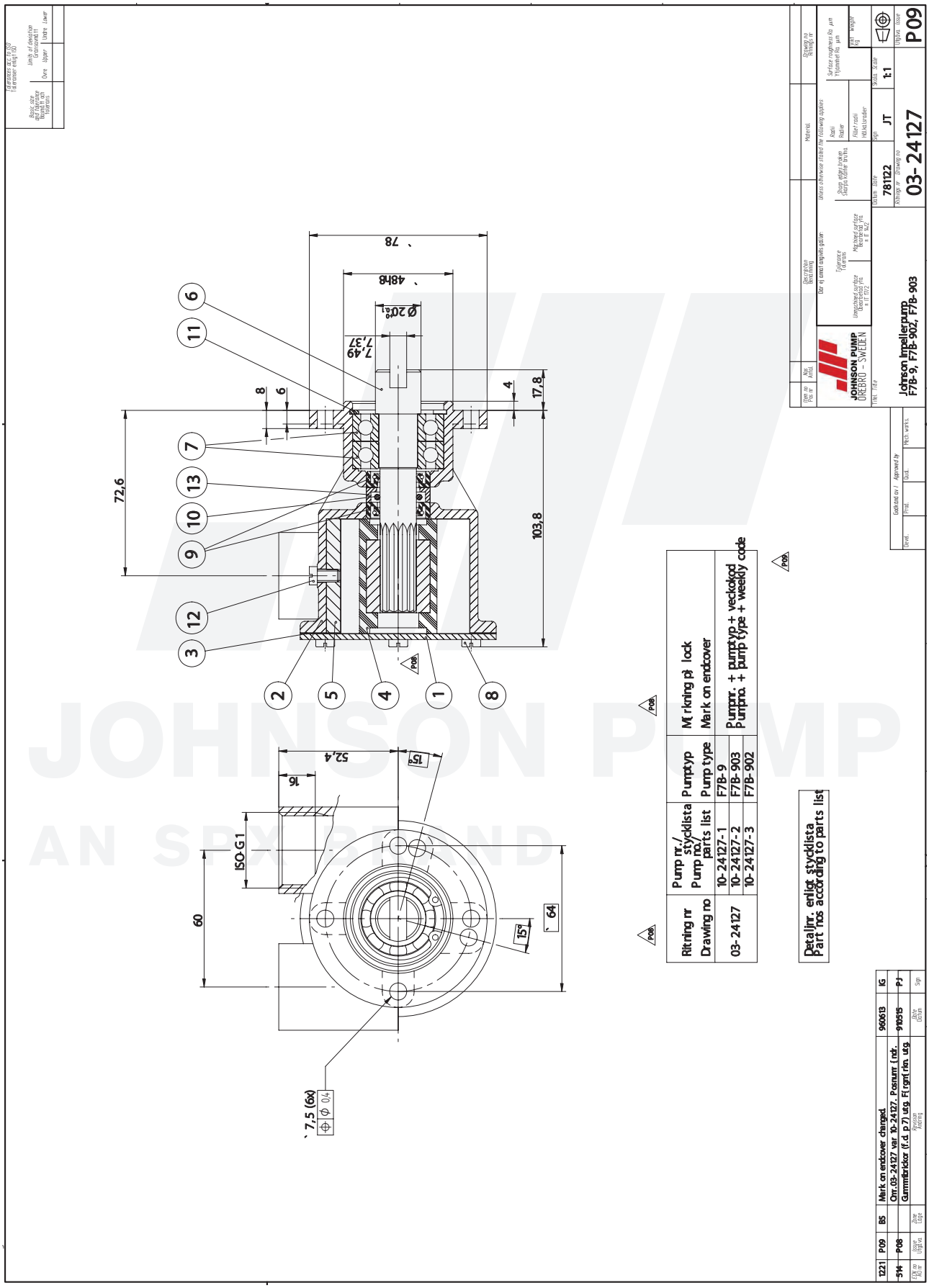
Ritning nr
Drawing no
Pump nr / stycklista
Pump no / parts list
Pumptyp
Pump type
Märkning på lock
Mark on endcover
03-24127
10-24127-1
F7B-9
Pumpnr. + pumptyp + veckokod
Pumpno. + pump type + weekly code
10-24127-2
F7B-903
10-24127-3
F7B-902
Detaljnr. enligt stycklista
Part nos according to parts list
JOHNSON PUMP
ÖREBRO – SWEDEN
Johnson Impellerpump
F7B-9, F7B-902, F7B-903
03-24127
P09
1221 P09 BS Mark on endcover changed 960513 IG
514 P08 Ctrl. 03-24127 var. 10-24127. Posnum. i tdr. 910515 PJ
Gummiärickor (f.d. p.7) utg. Fl.ignr (no. utg.
Revision
Revision
Ritning
Date
Datum
Sign
Issue
Utgåva
Date
Datum
Sign
Issue
Utgåva
Date
Datum
Sign
Issue
Utgåva

10-24139 pump F7B-9

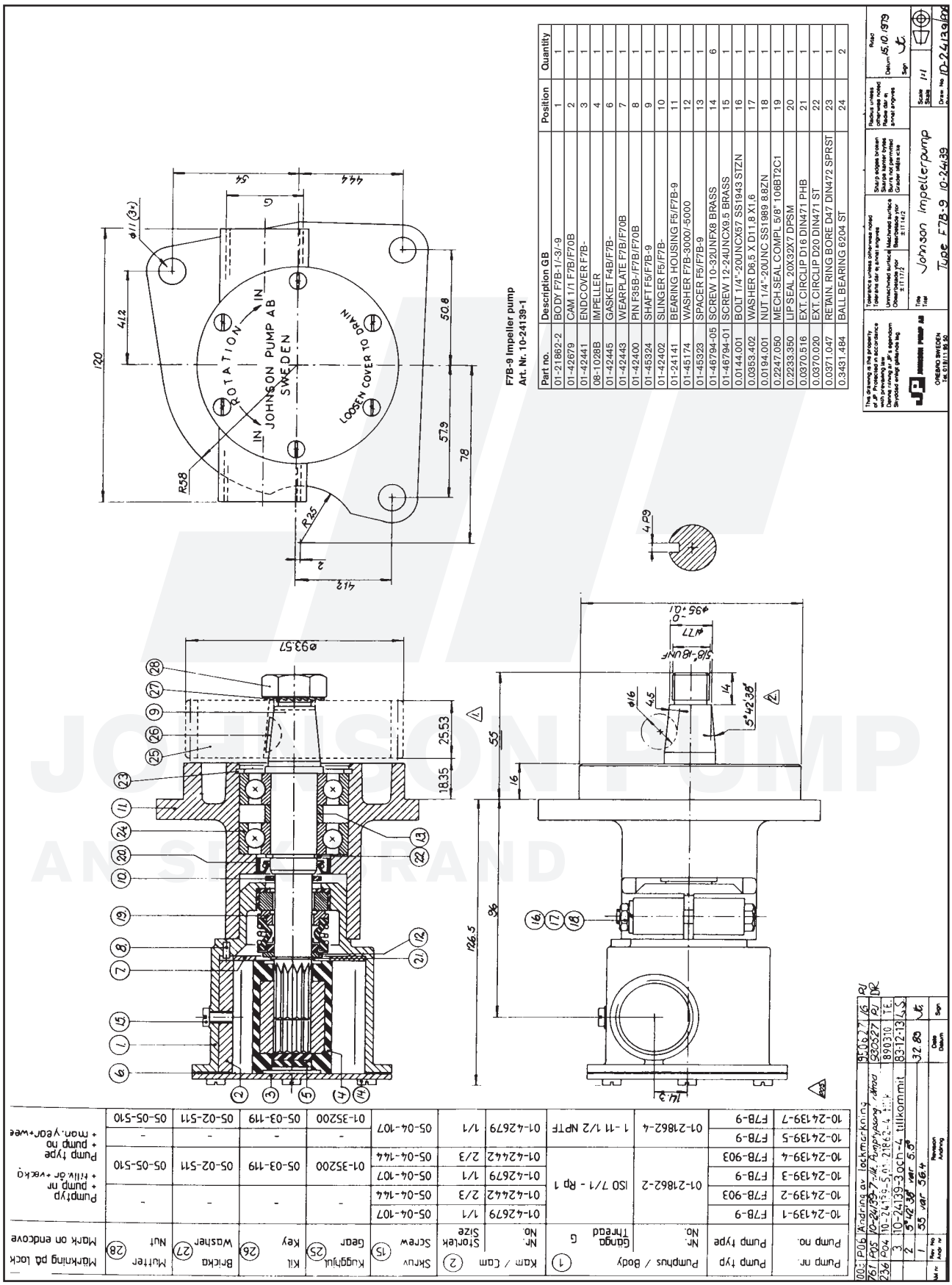

F7B-9 Impeller pump
Art. Nr. 10-24139-1

Part no.	Description GB	Position	Quantity
01-21862-2	BODY F7B-1/-3/-9	1	1
01-42679	CAM 1/1 F7B/F70B	2	1
01-42441	ENDCOVER F7B-	3	1
08-1028B	IMPELLER	4	1
01-42445	GASKET F4B/F7B-	6	1
01-42443	WEARPLATE F7B/F70B	7	1
01-42400	PIN F35B-/F7B/F70B	8	1
01-45324	SHAFT F5/F7B-9	9	1
01-42402	SLINGER F5/F7B-	10	1
01-24141	BEARING HOUSING F5/F7B-9	11	1
01-45174	WASHER F7B-3000/-5000	12	1
01-45323	SPACER F5/F7B-9	13	1
01-46794-05	SCREW 10-32UNFX8 BRASS	14	6
01-46794-01	SCREW 12-24UNCX9.5 BRASS	15	1
0.0144.001	BOLT 1/4"-20UNCX57 SS1943 SITZN	16	1
0.0353.402	WASHER D6.5 X D11.8 X1.6	17	1
0.0194.001	NUT 1/4"-20UNC SS1989 8.8ZN	18	1
0.2247.050	MECH.SEAL COMPL 5/8" 106BT2C1	19	1
0.2233.350	LIP SEAL 20X32X7 DPSM	20	1
0.0370.516	EXT.CIRCLIP D16 DIN471 PHB	21	1
0.0370.020	EXT.CIRCLIP D20 DIN471 ST	22	1
0.0371.047	RETAIN. RING BORE D47 DIN472 SPRST	23	1
0.3431.484	BALL BEARING 6204 ST	24	2

Pump nr.	Pump typ	Pumphus / Body			Kam / Cam		Skruv	Kugghjul	Kil	Brickor	Mutter	Märkning på lock
	Pump typ	Nr.	Gänga	G	Nr.	Storlek	Screw	Gear	Key	Washer	Nut	Mark on endcover
	Pump no.	No.	Thread		No.	Size						
10-24139-1	F7B-9	01-21862-2	ISO 7/1 - Rp 1		01-42679	1/1	05-04-107	-	-	-	-	Pumptyp + pump nr + kilix.nr + vekq
10-24139-2	F7B-903				01-42442	2/3	05-04-144					
10-24139-3	F7B-9				01-42679	1/1	05-04-107					
10-24139-4	F7B-903				01-42442	2/3	05-04-144	01-35200	05-03-119	05-02-511	05-05-510	Pump type + pump no + mon.year+wee
10-24139-5	F7B-9	01-21862-4	1 -11 1/2 NPTF		01-42679	1/1	05-04-107	-	-	-	-	
10-24139-7	F7B-9							01-35200	05-03-119	05-02-511	05-05-510	

Nr	Rev. No Index	Revision Ändring	Date Datum	Sign
007	P06	Ändring av lackmärkning	950627	KG
761	P05	10-24139-7 till Ungrysong ändrad	930527	PJ DK
236	P04	10-24139-5 01-21862-4 till	890310	T.E.
	3	10-24139-3 och -4 tillkommit	831213	S.S
	2	5°42'38" var 5°8'	32 80	
	1	35 var 36.4		

Johnson Pump AB
ORESUND SWEDEN
Tel: 018/11 85 50

This drawing is the property of JP. Protected in accordance with prevailing law. Delning av JP:s egendom förbjuden. Skyddad enligt gällande lag.

Transmission without permission forbidden. Tillåter ej utan skriftligt medgivande

Sharp edges broken Skarpa kanter brytes Burrs not permitted Grader ej tillåtna

Machined surface Bearbetade ytor ±1/1 1/2

Unmachined surface Obearbetade ytor ±1/1 1/2

Radius unless otherwise specified Radie där ej annat anges

Scale 1:1 Skala

Date 15.10.1979 Datum

Drawn No 10-24139/006

JOHNSON PUMP
AN SPX BRAND

The product, i.e. concept, design and construction, is the property of SPX Johnson Pump Marine AB

10-24179 pump F7B-9

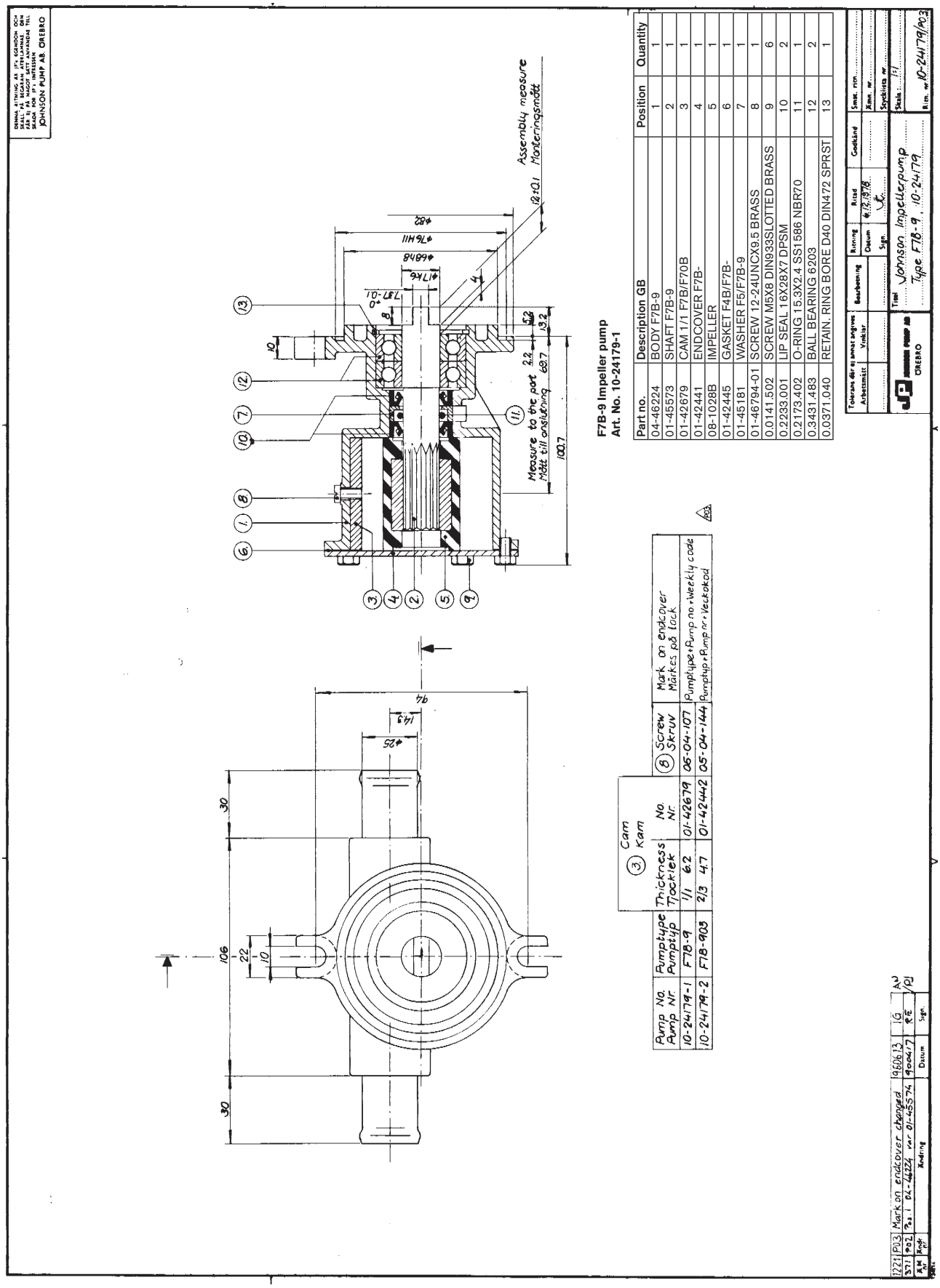

Part no.	Description GB	Position	Quantity
04-46224	BODY F7B-9	1	1
01-45573	SHAFT F7B-9	2	1
01-42679	CAM 1/1 F7B/F70B	3	1
01-42441	ENDCOVER F7B-	4	1
08-1028B	IMPELLER	5	1
01-42445	GASKET F4B/F7B-	6	1
01-45181	WASHER F5/F7B-9	7	1
01-46794-01	SCREW 12-24UNCX9.5 BRASS	8	1
0.0141.502	SCREW M5X8 DIN933SLOTTED BRASS	9	6
0.2233.001	LIP SEAL 16X28X7 DPSM	10	2
0.2173.402	O-RING 15.3X2.4 SS1586 NBR70	11	1
0.3431.483	BALL BEARING 6203	12	2
0.0371.040	RETAIN. RING BORE D40 DIN472 SPRST	13	1

10-24183 pump F7B-9

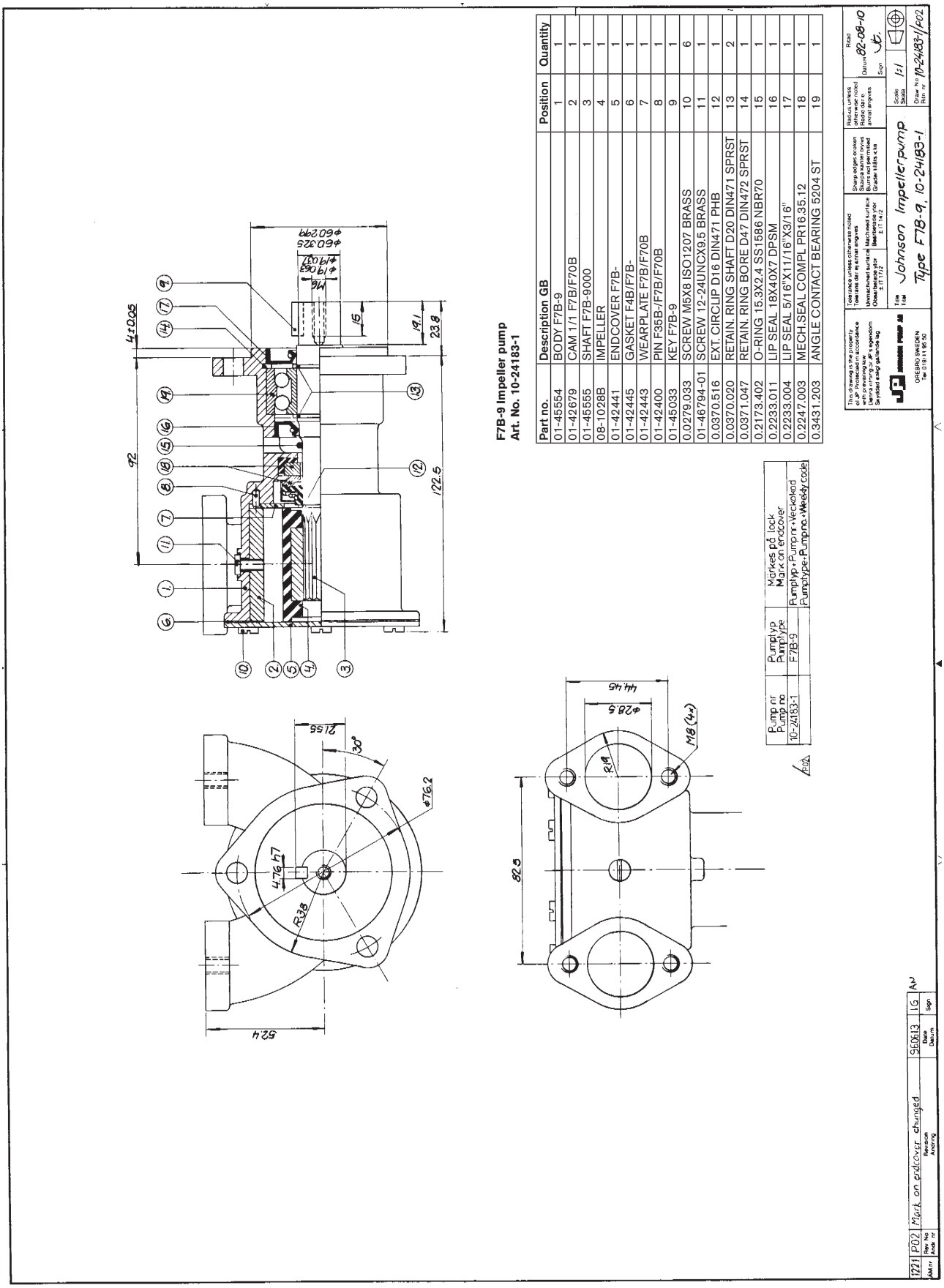

Part no.	Description GB	Position	Quantity
01-45554	BODY F7B-9	1	1
01-42679	CAM 1/1 F7B/F70B	2	1
01-45555	SHAFT F7B-9000	3	1
08-1028B	IMPELLER	4	1
01-42441	ENDCOVER F7B-	5	1
01-42445	GASKET F4B/F7B-	6	1
01-42443	WEARPLATE F7B/F70B	7	1
01-42400	PIN F35B-/F7B/F70B	8	1
01-45033	KEY F7B-9	9	1
0.0279.033	SCREW M5X8 ISO1207 BRASS	10	6
01-46794-01	SCREW 12-24UNCX9.5 BRASS	11	1
0.0370.516	EXT. CIRCLIP D16 DIN471 PHB	12	1
0.0370.020	RETAIN. RING SHAFT D20 DIN471 SPRST	13	2
0.0371.047	RETAIN. RING BORE D47 DIN472 SPRST	14	1
0.2173.402	O-RING 15.3X2.4 SS1586 NBR70	15	1
0.2233.011	LIP SEAL 18X40X7 DPSM	16	1
0.2233.004	LIP SEAL 5/16"X11/16"X3/16"	17	1
0.2247.003	MECH.SEAL COMPL PR16.35.12	18	1
0.3431.203	ANGLE CONTACT BEARING 5204 ST	19	1

The product, i.e. concept, design and construction, is the property of SPX Johnson Pump Marine AB

10-24218 pump F7B-903

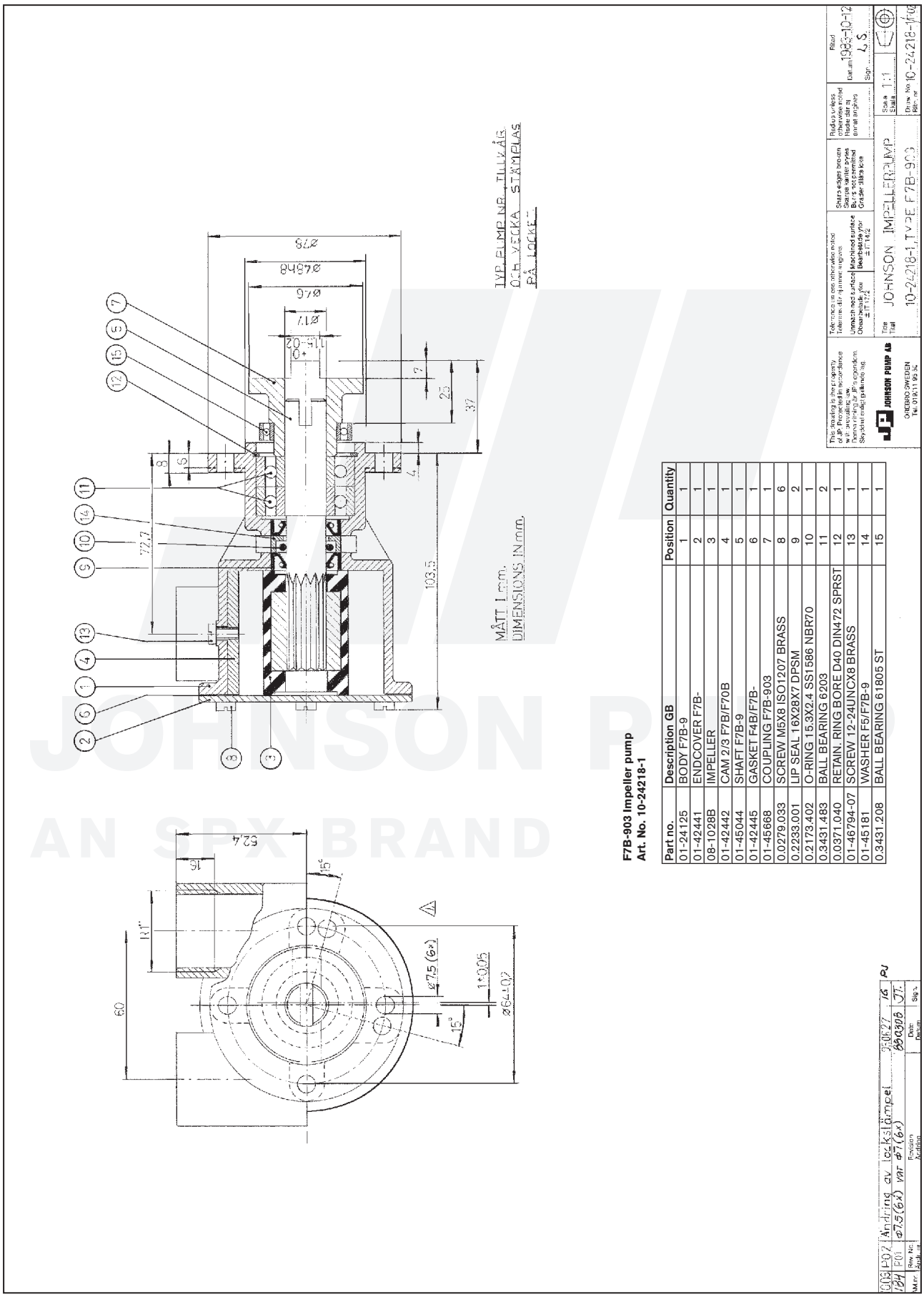

F7B-903 Impeller pump
Art. No. 10-24218-1

Part no.	Description GB	Position	Quantity
01-24125	BODY F7B-9	1	1
01-42441	ENDCOVER F7B-	2	1
08-1028B	IMPELLER	3	1
01-42442	CAM 2/3 F7B/F70B	4	1
01-45044	SHAFT F7B-9	5	1
01-42445	GASKET F4B/F7B-	6	1
01-45668	COUPLING F7B-903	7	1
0.0279.033	SCREW M5X8 ISO1207 BRASS	8	6
0.2233.001	LIP SEAL 16X28X7 DPSM	9	2
0.2173.402	O-RING 15.3X2.4 SS1586 NBR70	10	1
0.3431.483	BALL BEARING 6203	11	2
0.0371.040	RETAIN. RING BORE D40 DIN472 SPRST	12	1
01-46794-07	SCREW 12-24UNCX8 BRASS	13	1
01-45181	WASHER F5/F7B-9	14	1
0.3431.208	BALL BEARING 61805 ST	15	1

JOHNSON P
AN SPX BRAND

10-24235 pump F7B-9

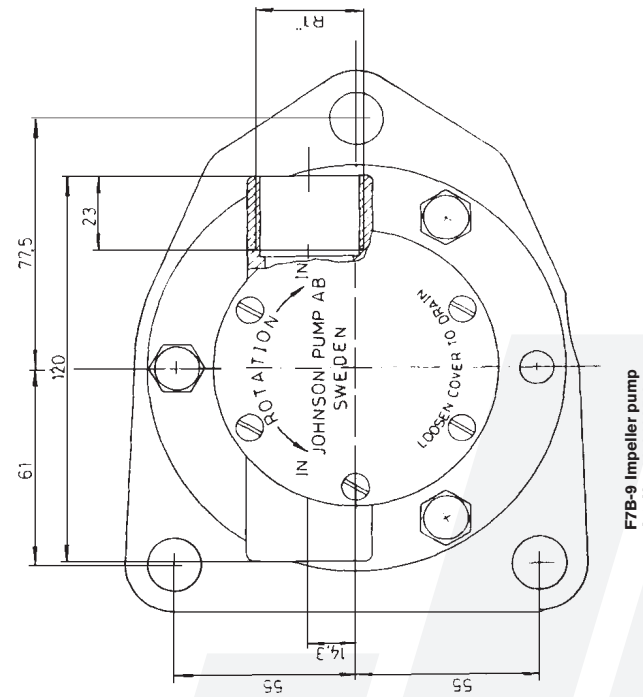

F7B-9 Impeller pump
Art. No. 10-24235-3

Part no.	Description GB	Position	Quantity
01-21862-2	BODY F7B-1/-3/-9	1	1
01-42441	ENDCOVER F7B-	2	1
01-42679	CAM 1/1 F7B/F70B	3	1
01-35202	SHAFT F7B-9	4	1
08-1028B	IMPELLER	5	1
01-42443	WEARPLATE F7B/F70B	6	1
01-42400	PIN F35B-/F7B/F70B	7	1
01-42445	GASKET F4B/F7B-	8	1
01-46794-01	SCREW 12-24UNCX9.5 BRASS	9	1
01-46794-05	SCREW 10-32UNFX8 BRASS	10	6
0.0370.516	EXT. CIRCLIP D16 DIN471 PHB	12	1
0.2247.050	MECH.SEAL COMPL 5/8" 106BT2C1	13	1
01-42402	SLINGER F5/F7B-	14	1
01-21884-2	BEARING HOUSING F7B-9	15	1
0.2233.002	LIP SEAL 28X38X7 DPSM	16	1
0.0371.062	RETAIN. RING BORE D62 DIN472 SPRST	17	1
0.3431.486	BALL BEARING 6206 ST	18	2
0.0503.036	WOODRUFFKEY 6X9X22 ST	19	1
0.0144.001	BOLT 1/4"-20UNCX57 SS1943 STZN	20	1
0.0194.001	NUT 1/4"-20UNC SS1989 8.8ZN	21	1
0.0353.402	WASHER D6.5 X D11.8 X1.6	22	1
0.2173.457	O-RING 84.5X3.0 SS1586 NBR70	25	1

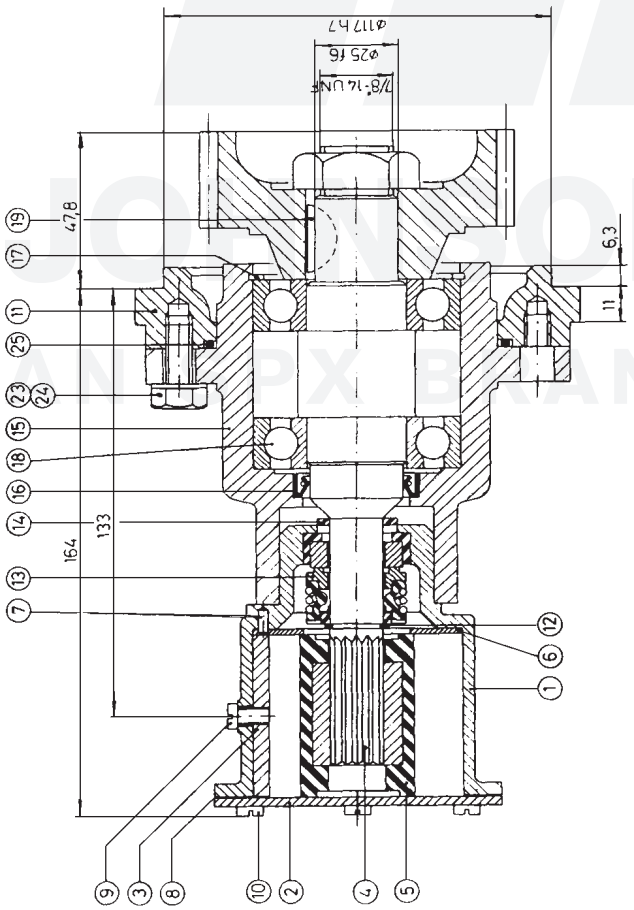

Note: The gear and the nut supplied by customer and will not be mounted by Johnson Pump.

Obs: Kugghjul och mutter tillhandahålles av kund. Monteras ej av Johnson Pump.

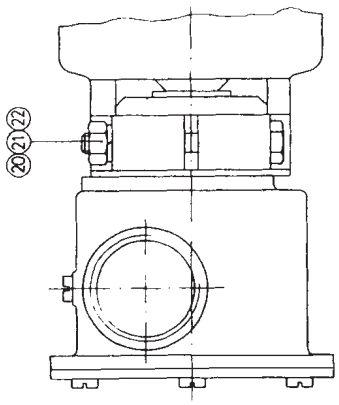

PUMP NO. PUMP NR.	PUMPTYPE PUMPTYP	THICKNESS TJOCKLEK	CAM KAM NO. NR.	9 SCREW SKRUV
10-24235-1	F7B-9	1/1 6.2	01-42679	05-04-107
10-24235-2	F7B-903	2/3 4.7	01-42442	05-04-144

JOHNSON IMPELLERPUMP
TYPE F7B-9, 10-24235
ÖREBRO SWEDEN
Scale 1:1
Drawing No. 10-24235

JOHNSON PUMP
AN SPX BRAND

The product, i.e. concept, design and construction, is the property of SPX Johnson Pump Marine AB

10-24244 pump F7B-9

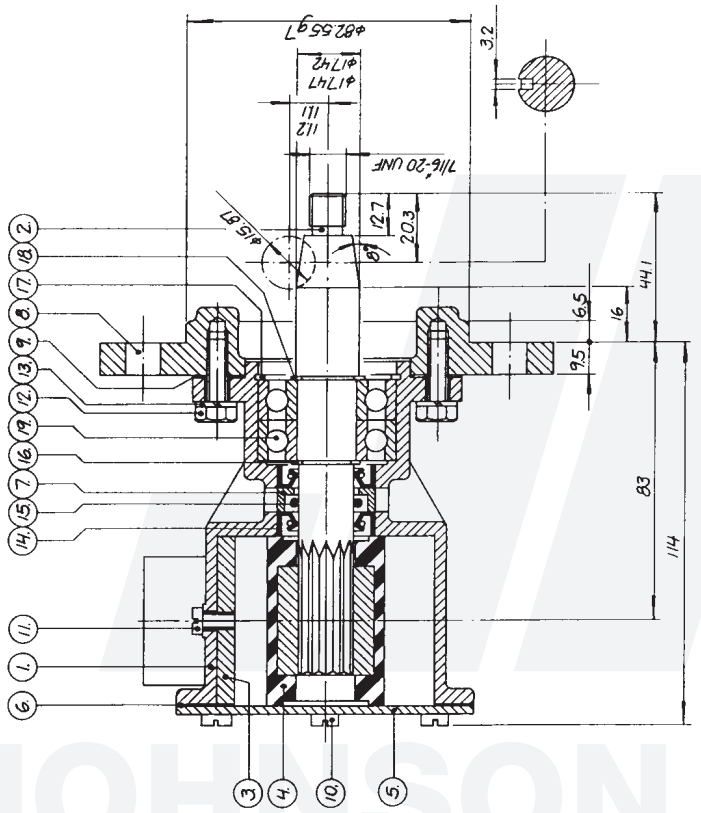

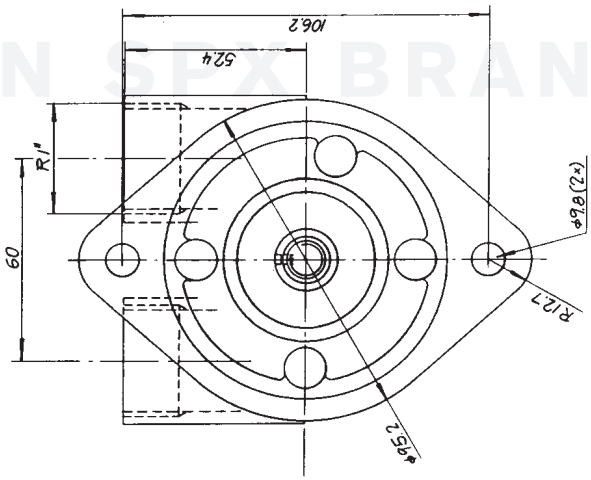

F7B-9 Impeller pump
Art. No. 10-24244-1

Part no.	Description GB	Position	Quantity
01-24125	BODY F7B-9	1	1
01-45753	SHAFT F7B-9	2	1
01-42679	CAM 1/1 F7B/F70B	3	1
08-1028B	IMPELLER	4	1
01-42441	ENDCOVER F7B-	5	1
01-42445	GASKET F4B/F7B-	6	1
01-45181	WASHER F5/F7B-9	7	1
01-35213	FLANGE F7B-9	8	1
01-45754	GASKET F7B-9	9	1
0.0279.033	SCREW M5X8 ISO1207 BRASS	10	6
01-46794-01	SCREW 12-24UNCX9.5 BRASS	11	1
0.0141.911	TAPBOLT M6X20 DIN933 STZN	12	4
0.0353.402	WASHER D6.5 X D11.8 X1.6	13	4
0.2233.001	LIP SEAL 16X28X7 DPSM	14	2
0.2173.402	O-RING 15.3X2.4 SS1586 NBR70	15	1
0.0370.516	EXT. CIRCLIP D16 DIN471 PHB	16	1
0.0371.040	RETAIN. RING BORE D40 DIN472 SPRST	17	1
0.0370.017	EXT. CIRCLIP D17 DIN471 ST	18	1
0.3431.483	BALL BEARING 6203	19	2

JOHNSON PUMP
AN SPX BRAND

F7B-902 Impeller pump
Art. No. 10-24253-1

Part. No.	Description Gb	Position	Quantity
01-21862-4	BODY F7B-	1	1
01-42584	CAM 1/2 F7B	2	1
08-1028B	IMPELLER	3	1
01-35220	SHAFT F7B-902	4	1
01-42441	ENDCOVER F7B-	5	1
01-42445	GASKET F4B/F7B-	6	1
01-42443	WEARPLATE F7B/F70B	7	1
01-42400	PIN F35B-/F7B/F70B	8	1
01-24254-2	BEARING HOUSING F7B-9	9	1
01-42537	SPACER F5/F7B-9	10	1
01-45174	WASHER F7B-3000/-5000	11	1
01-42402	SLINGER F5/F7B-	12	1
0.0370.516	EXT. CIRCLIP D16 DIN471 PHB	13	1
0.0370.017	EXT. CIRCLIP D17 DIN471 ST	14	1
0.0371.047	RETAIN. RING BORE D47 DIN472 SPRST	15	1
0.0503.032	WOODRUFKEY 5X6.5X16 DIN6888 ST	16	1
0.2247.050	MECH.SEAL COMPL 5/8" 106BT2C1	17	1
0.2233.017	LIP SEAL 16X32X7 DPSM	18	1
0.3431.523	BALL BEARING 6303 ST	19	2
01-46794-05	SCREW 10-32UNFX8 BRASS	20	6
01-46794-06	SCREW 12-24UNCX6.5 BRASS	21	1
0.0144.001	BOLT 1/4"-20UNCX57 SS1943 STZN	22	1
0.0353.402	WASHER D6,5 X D11,8 X1,6	23	1
0.0194.001	NUT 1/4"-20UNC SS1989 8.8ZN	24	1

The product, i.e. concept, design and construction, is the property of SPX Johnson Pump Marine AB

10-24253 pump F7B-9

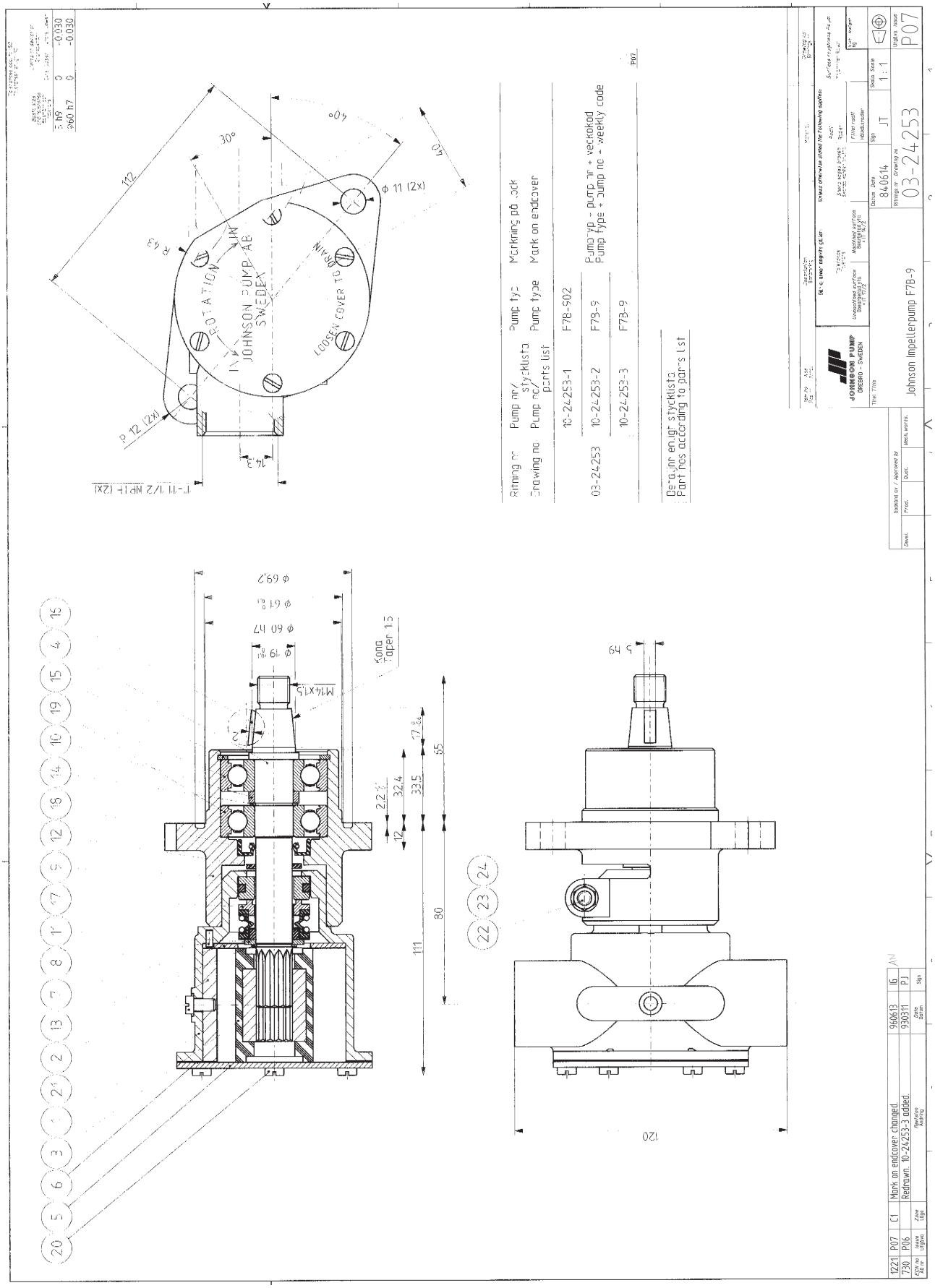

10-24277 pump F7B-9

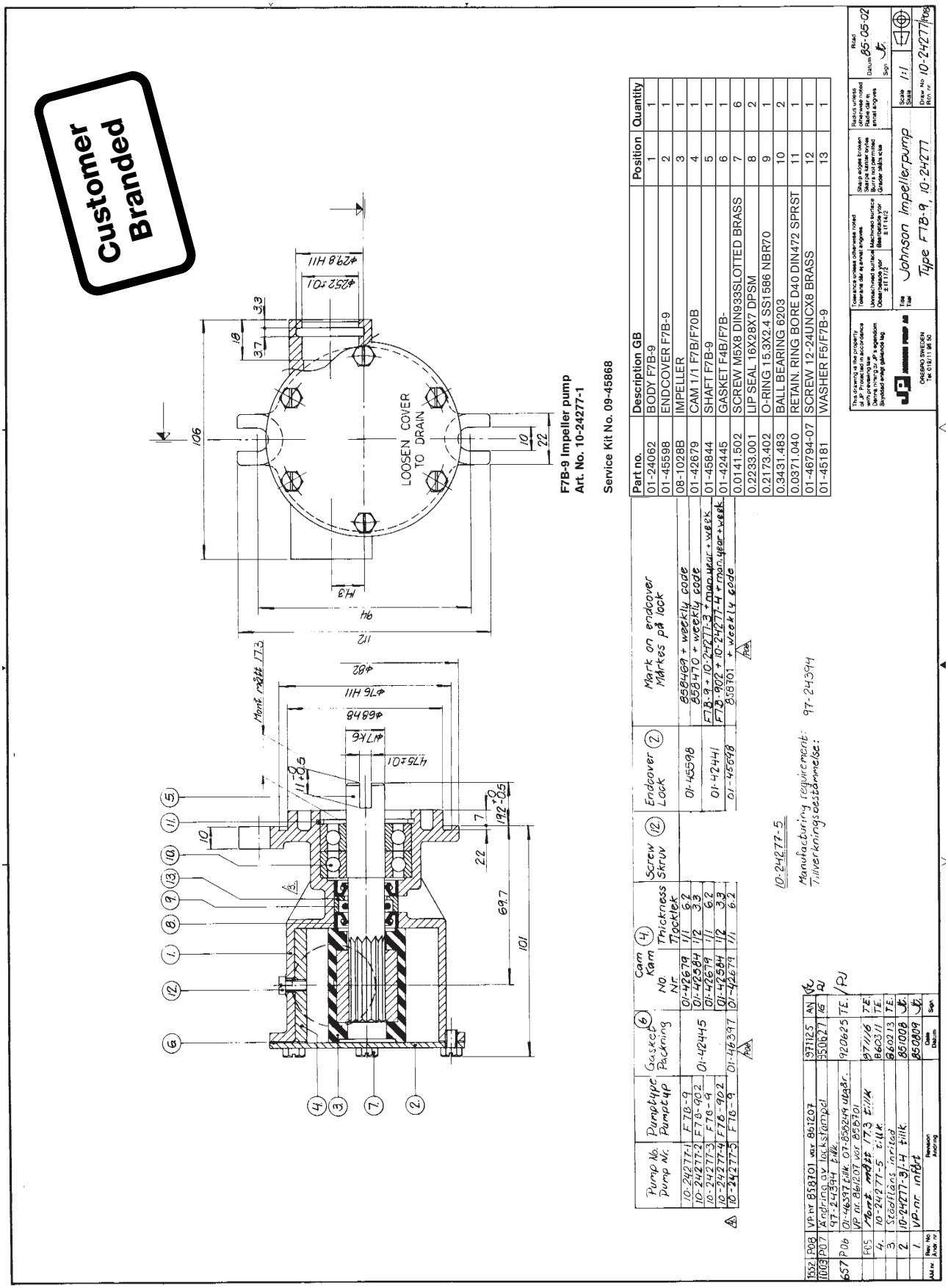

Part no.	Description GB	Position	Quantity
01-24062	BODY F7B-9	1	1
01-45598	ENDCOVER F7B-9	2	1
08-1028B	IMPELLER	3	1
01-42679	CAM 1/1 F7B/F70B	4	1
01-45844	SHAFT F7B-9	5	1
01-42445	GASKET F4B/F7B-	6	1
0.0141.502	SCREW M6X8 DIN933SLOTTED BRASS	7	6
0.2233.001	LIP SEAL 16X28X7 DPSM	8	2
0.2173.402	O-RING 15.3X2.4 SS1586 NBR70	9	1
0.3431.483	BALL BEARING 6203	10	2
0.0371.040	RETAIN. RING BORE D40 DIN472 SPRST	11	1
01-46794-07	SCREW 12-24UNCX8 BRASS	12	1
01-45181	WASHER F5/F7B-9	13	1

The product, i.e. concept, design and construction, is the property of SPX Johnson Pump Marine AB

10-24280 pump F7B-9

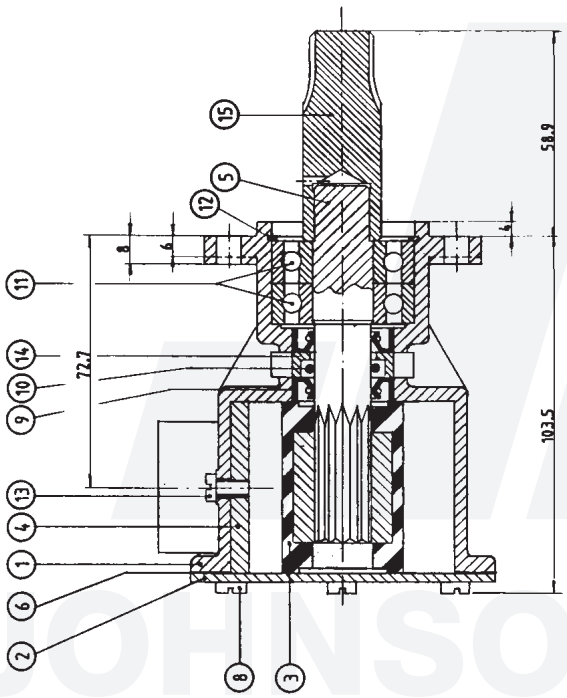

Pump no. 10-24280-1/-2	*	1	Service kit	09-45592
Splines coupling		15	1	Kugkoppling	01-45028
Washer		14	1	Bricka	01-45181
Screw		13	1	Skruv	See table
Restaining ring		12	1	Låsring	05-34-130
Ball bearing		11	2	Kullager	See table
O-ring		10	1	O-ring	ø15.3×ø2.4 05-06-501
Lip seal		9	* 2	Läppätning	OPSM 16289 05-29-105
Screw		8	* 6	Skruv	M5×8 05-04-174
Gasket		6	* 1	Packning	01-42445
Shaft		5	1	Axel	01-45059
Cam		4	1	Kam	See table
Impeller		3	* 1	Impeller	08-1028B
Cover		2	1	Lock	01-42441
Body		1	1	Pumphus	01-24125

Part No. Det. nr | Noa. Antal | Description Benämning | Material | Dimension | Order No. Beställ. nr

This drawing is the property of JP. Protected in accordance with providing law. Ritningen är JP:s egendom. Skyddad enligt gällande lag.

Tolerances unless otherwise noted Toleranser om ej annat angivet

Unmachined surface Råa ytor

Machined surface Bearbetade ytor ±1T 14/2

Sharp edges broken Skarpa kanter avrundade Burrs not allowed Grader ej tillåtna

Radius unless otherwise noted Radie om ej annat angivet

Rebid Datum 86-03-04 Sign T.E.

JOHNSON PUMP AB
ÖREBRO SWEDEN
Tel 019/11 85 50

Title Titel: JOHNSON IMPELLERPUMP
TYPE F7B-9 10-24280

Scale Skala 1:1
Drawn No. Ritn. nr 10-24280

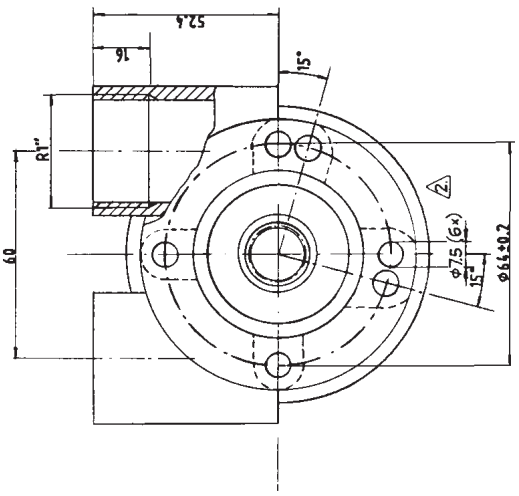

Pump no. Pump nr.	Pumptype Pumptyp	Thickness Tjocklek	Cam/Kam No. Nr.	Screw Skruv	Ballbearing Kullager
10-24280-1	F7B-903	2/3 4.7	01-42442	05-04-144	05-08-129
10-24280-2	F7B-9	1/1 6.2	01-42679	05-04-107	05-08-128

Ver. nr	Rev. No Ändr. nr	Revision Ändrad	Date Datum	Sign
1984	2	ø7.5(6×) var ø7(6×)	890308	JT.
	1	Detalj nr 7 utgår	860318	TE.

JOHNSON PUMP
AN SPX BRAND

10-24305 pump F7B-903

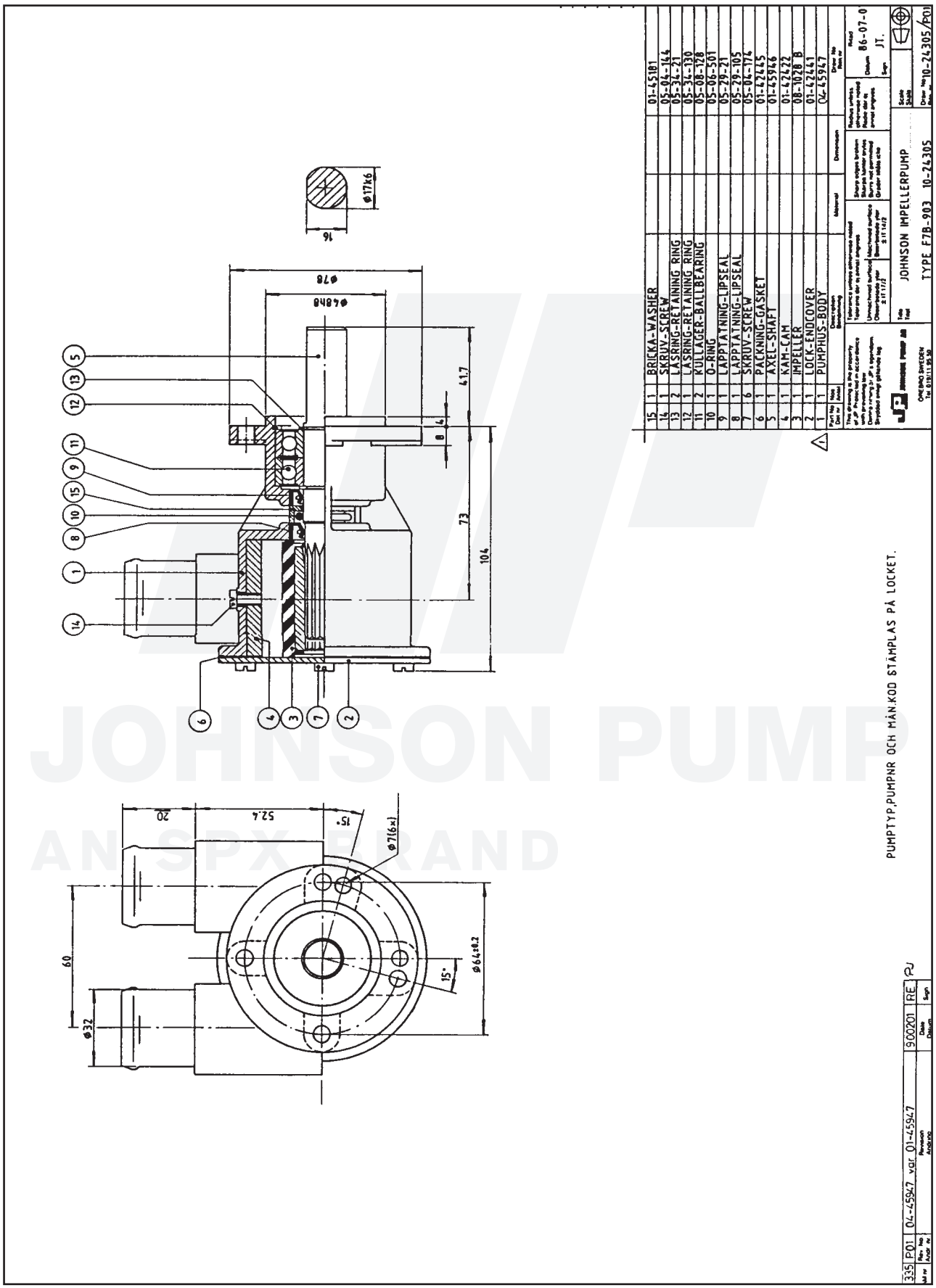

JOHNSON PUMP
AN SPX BRAND

The product, i.e. concept, design and construction, is the property of SPX Johnson Pump Marine AB

10-24329 pump F7B-9

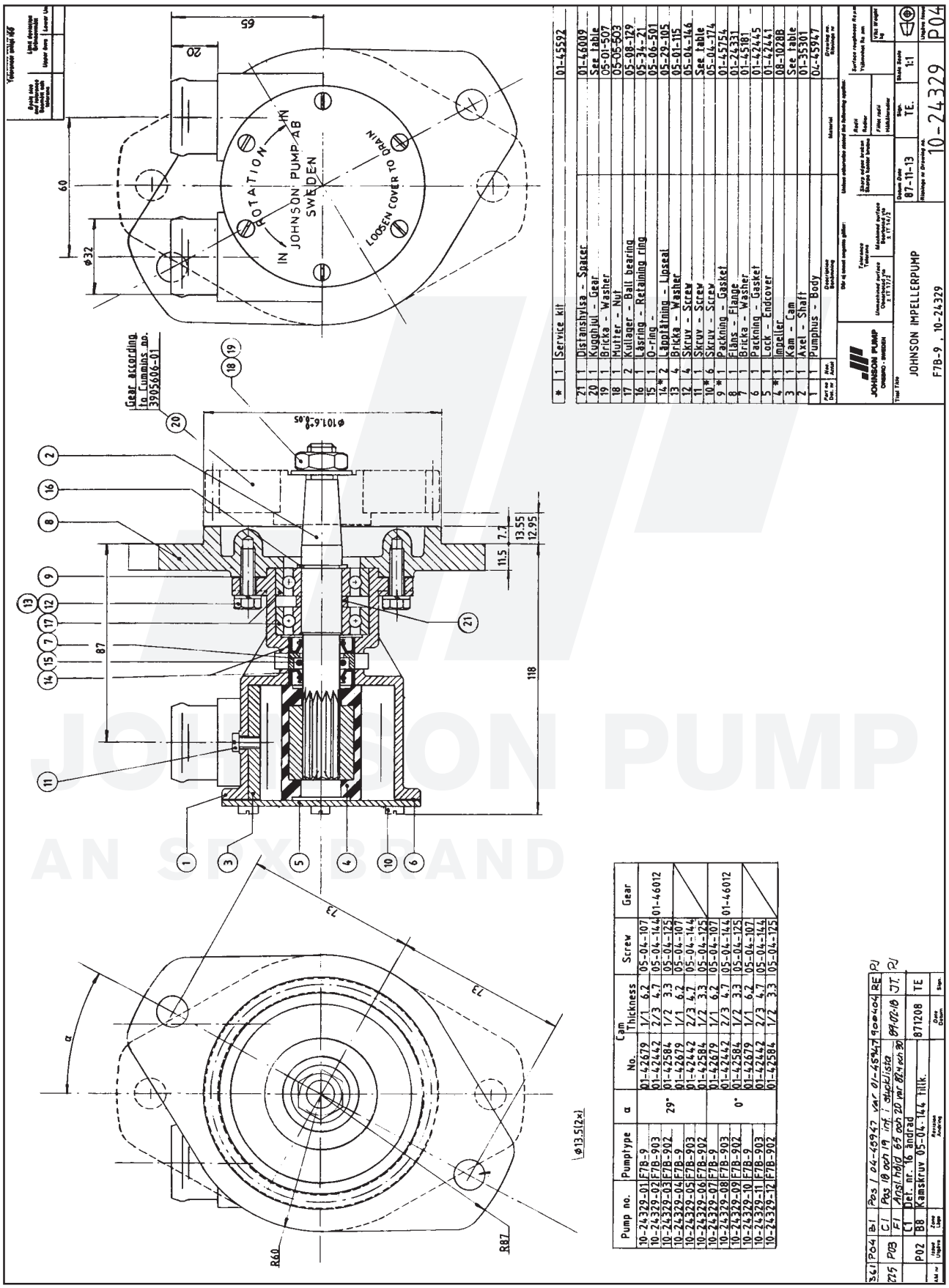

*	1	Service kit	01-45592
21	1	Distanshylsa - Spacer	01-46009
20	1	Kugghjul - Gear	See table
19	1	Bricka - Washer	05-01-507
18	1	Mutter - Nut	05-05-503
17	2	Kullager - Ball bearing	05-08-129
16	1	Låsring - Retaining ring	05-34-21
15	1	O-ring -	05-06-501
14 *	2	Läppätning - Lipseal	05-29-105
13	4	Bricka - Washer	05-01-115
12	4	Skruv - Screw	05-04-146
11	1	Skruv - Screw	See table
10 *	6	Skruv - Screw	05-04-174
9 *	1	Packning - Gasket	01-45754
8	1	Flänsa - Flange	01-43331
7	1	Bricka - Washer	01-45181
6	1	Packning - Gasket	01-42445
5	1	Lock - Endcover	01-42441
4 *	1	Impeller	08-1028B
3	1	Kam - Cam	See table
2	1	Axel - Shaft	01-35301
1	1	Pumphus - Body	04-45947

Pump no.	Pumptype	α	Cam No.	Cam Thickness	Screw	Gear
10-24329-01	F7B-9	29°	01-42679	1/1 6,2	05-04-107	01-46012
10-24329-02	F7B-903		01-42442	2/3 4,7	05-04-144	
10-24329-03	F7B-902		01-42584	1/2 3,3	05-04-125	
10-24329-04	F7B-9		01-42679	1/1 6,2	05-04-107	
10-24329-05	F7B-903		01-42442	2/3 4,7	05-04-144	
10-24329-06	F7B-902		01-42584	1/2 3,3	05-04-125	
10-24329-07	F7B-9	0°	01-42679	1/1 6,2	05-04-107	01-46012
10-24329-08	F7B-903		01-42442	2/3 4,7	05-04-144	
10-24329-09	F7B-902		01-42584	1/2 3,3	05-04-125	
10-24329-10	F7B-9		01-42679	1/1 6,2	05-04-107	
10-24329-11	F7B-903		01-42442	2/3 4,7	05-04-144	
10-24329-12	F7B-902		01-42584	1/2 3,3	05-04-125	

361	P04	B1	Pos 1 04-45947 var 01-45947	90-04-04	RE	PJ
225	P03	C1	Pos 18 och 19 inf. i stuplista	89-02-18	JT.	PJ
		F1	Ansl.hål 65 och 20 var 82 ej 30			
	P02	B8	Del. nr. 16 ändrad	871208	TE	
		C1	Kamskruv 05-04-144 Tillk.			

F7B-9 Impeller pump
Art. No. 10-24349-01

Service Kit No. 09-45592

Part no.	Description GB	Position	Quantity
01-24125	BODY F7B-9	1	1
01-42441	ENDCOVER F7B-	2	1
08-1028B	IMPELLER	3	1
01-42679	CAM 1/1 F7B/F70B	4	1
01-46092	SHAFT F7B-9	5	1
01-42445	GASKET F4B/F7B-	6	1
0.0279.033	SCREW M5X8 ISO1207 BRASS	7	6
0.2233.001	LIP SEAL 16X28X7 DPSM	8	2
0.2173.402	O-RING 15.3X2.4 SS1586 NBR70	9	1
0.3431.742	BALL BEARING 6203 2 RS1 ST	10	2
0.0371.040	RETAIN. RING BORE D40 DIN472 SPRST	11	1
01-46794-01	SCREW 12-24UNCX9.5 BRASS	12	1
01-45181	WASHER F5/F7B-9	13	1

The product, i.e. concept, design and construction, is the property of SPX Johnson Pump Marine AB

10-24349 pump F7B-9

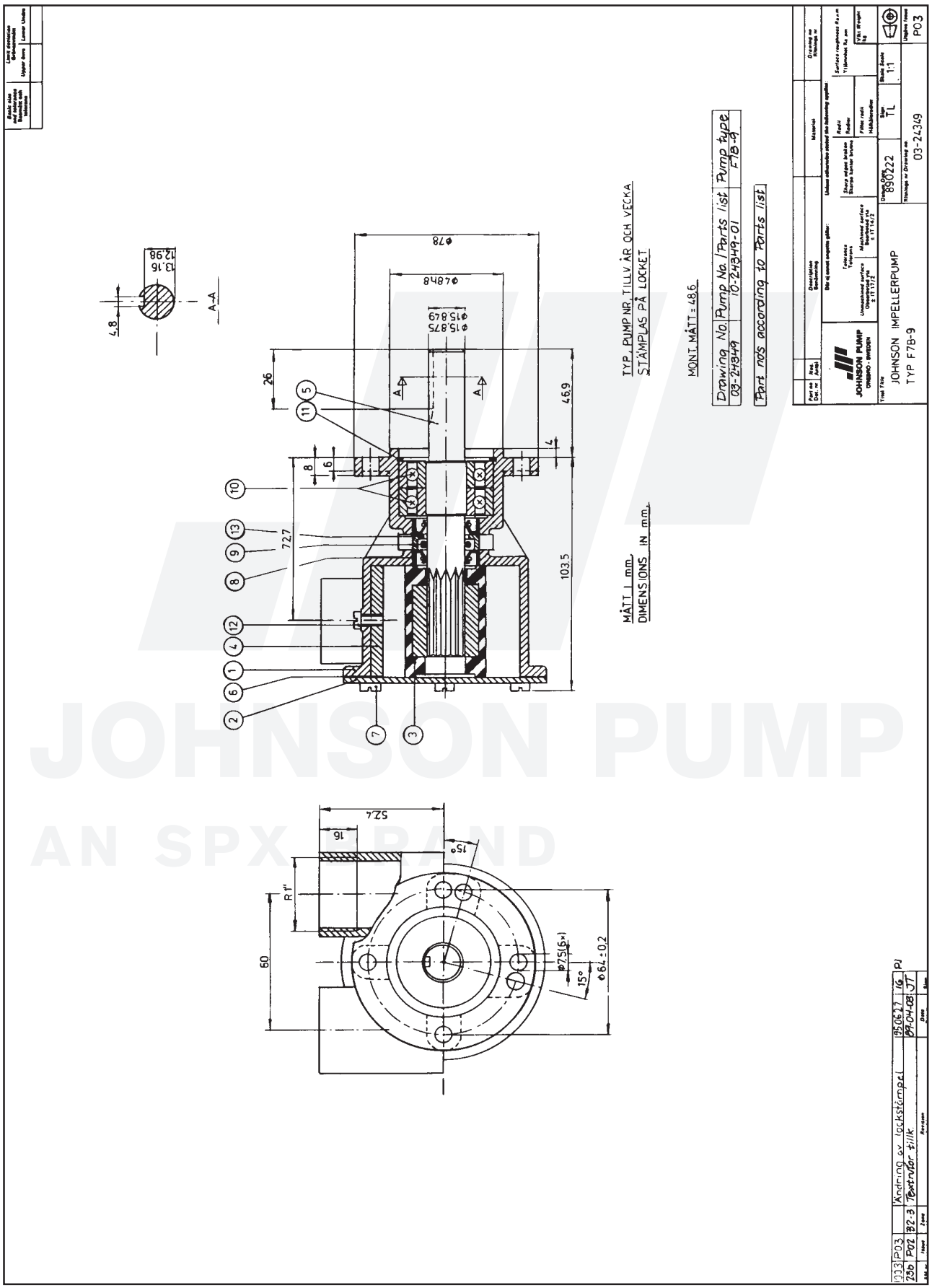

JOHNSON PUMP
AN SPX BRAND

F7B-9 Impeller pump
Art. No. 10-24365-02

Part. No.	Description GB	Position	Quantity
01-22151-2	BODY F7B-9	1	1
01-42679	CAM 1/1 F7B/F70B	2	1
08-1028B	IMPELLER	3	1
01-35220	SHAFT F7B-902	4	1
01-42441	ENDCOVER F7B-	5	1
01-42445	GASKET F4B/F7B-	6	1
01-42443	WEARPLATE F7B/F70B	7	1
01-42400	PIN F35B-/F7B/F70B	8	1
01-24254-2	BEARING HOUSING F7B-9	9	1
01-42537	SPACER F5/F7B-9	10	1
01-45174	WASHER F7B-3000/-5000	11	1
01-42402	SLINGER F5/F7B-	12	1
0.0370.516	EXT. CIRCLIP D16 DIN471 PHB	13	1
0.0370.017	EXT. CIRCLIP D17 DIN471 ST	14	1
0.0371.047	RETAIN. RING BORE D47 DIN472 SPRST	15	1
0.0503.032	WOODRUFKEY 5X6.5X16 DIN6888 ST	16	1
0.2247.050	MECH.SEAL COMPL 5/8” 106BT2C1	17	1
0.2233.017	LIP SEAL 16X32X7 DPSM	18	1
0.3431.523	BALL BEARING 6303 ST	19	2
01-46794-05	SCREW 10-32UNFX8 BRASS	20	6
01-46794-01	SCREW 12-24UNCX9.5 BRASS	21	1
0.0144.001	BOLT 1/4”-20UNCX57 SS1943 STZN	22	1
0.0353.402	WASHER D6,5 X D11,8 X1,6	23	1
0.0194.001	NUT 1/4”-20UNC SS1989 8.8ZN	24	1
01-24366	HOSE CONNECTION F7B-9	25	1
01-46138	GASKET F7B-9	26	1
0.0144.002	BOLT 5/16”-18UNCX20 SS1943	27	2
0.0144.005	BOLT UNC5/16”X57 SS1943 8.8ZN	28	2
0.0353.309	SPRINGWASH D8.2 DIN127 STZN	29	4

The product, i.e. concept, design and construction, is the property of SPX Johnson Pump Marine AB

10-24365 pump F7B-9

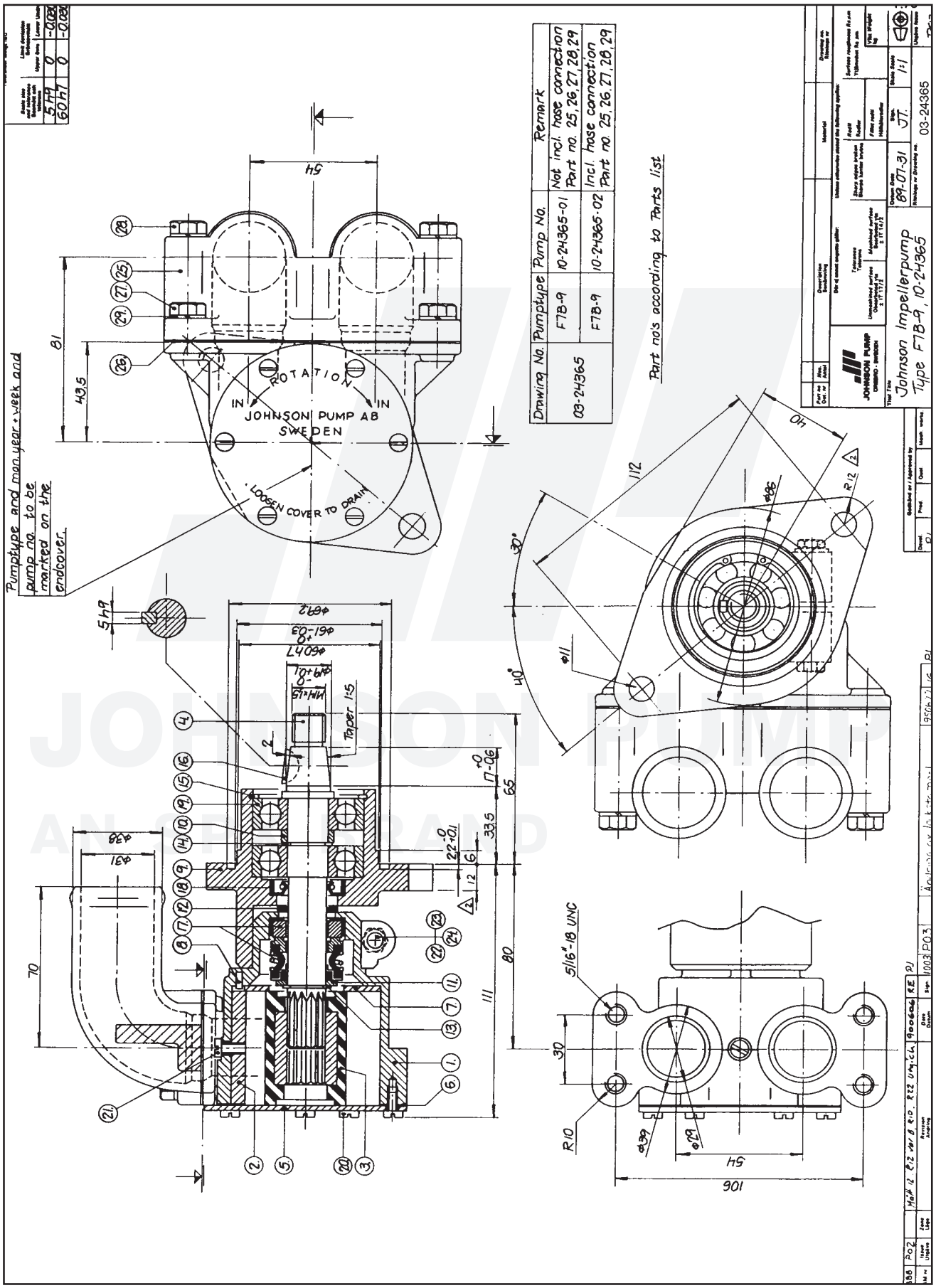

Drawing No.	Pumptype	Pump No.	Remark
03-24365	F7B-9	10-24365-01	Not incl. hose connection Part no. 25,26,27,28,29
	F7B-9	10-24365-02	Incl. hose connection Part no 25,26,27,28,29

JOHNSON PUMP ANGERBRAND

F7B-9 Impeller pump
Art. No. 10-24386-01

Service Kit No. 09-45592

Part no.	Description GB	Position	Quantity
04-46194-01	BODY F7B-9	1	1
01-42441	ENDCOVER F7B-	2	1
08-1028B	IMPELLER	3	1
01-42679	CAM 1/1 F7B/F70B	4	1
01-46195	SHAFT F7B-9	5	1
01-42445	GASKET F4B/F7B-	6	1
0.0279.033	SCREW M5X8 ISO1207 BRASS	7	6
0.2233.001	LIP SEAL 16X28X7 DPSM	8	1
0.2234.482	OIL SEAL 17X28X7 DIN3760A R NBR	9	1
0.2173.402	O-RING 15.3X2.4 SS1586 NBR70	10	1
0.3431.742	BALL BEARING 6203 2 RS1 ST	11	2
0.0371.040	RETAIN. RING BORE D40 DIN472 SPRST	12	1
0.0370.017	EXT. CIRCLIP D17 DIN471 ST	13	2
01-46794-01	SCREW 12-24UNCX9.5 BRASS	14	1
01-45181	WASHER F5/F7B-9	15	1

The product, i.e. concept, design and construction, is the property of SPX Johnson Pump Marine AB

10-24386 pump F7B-9

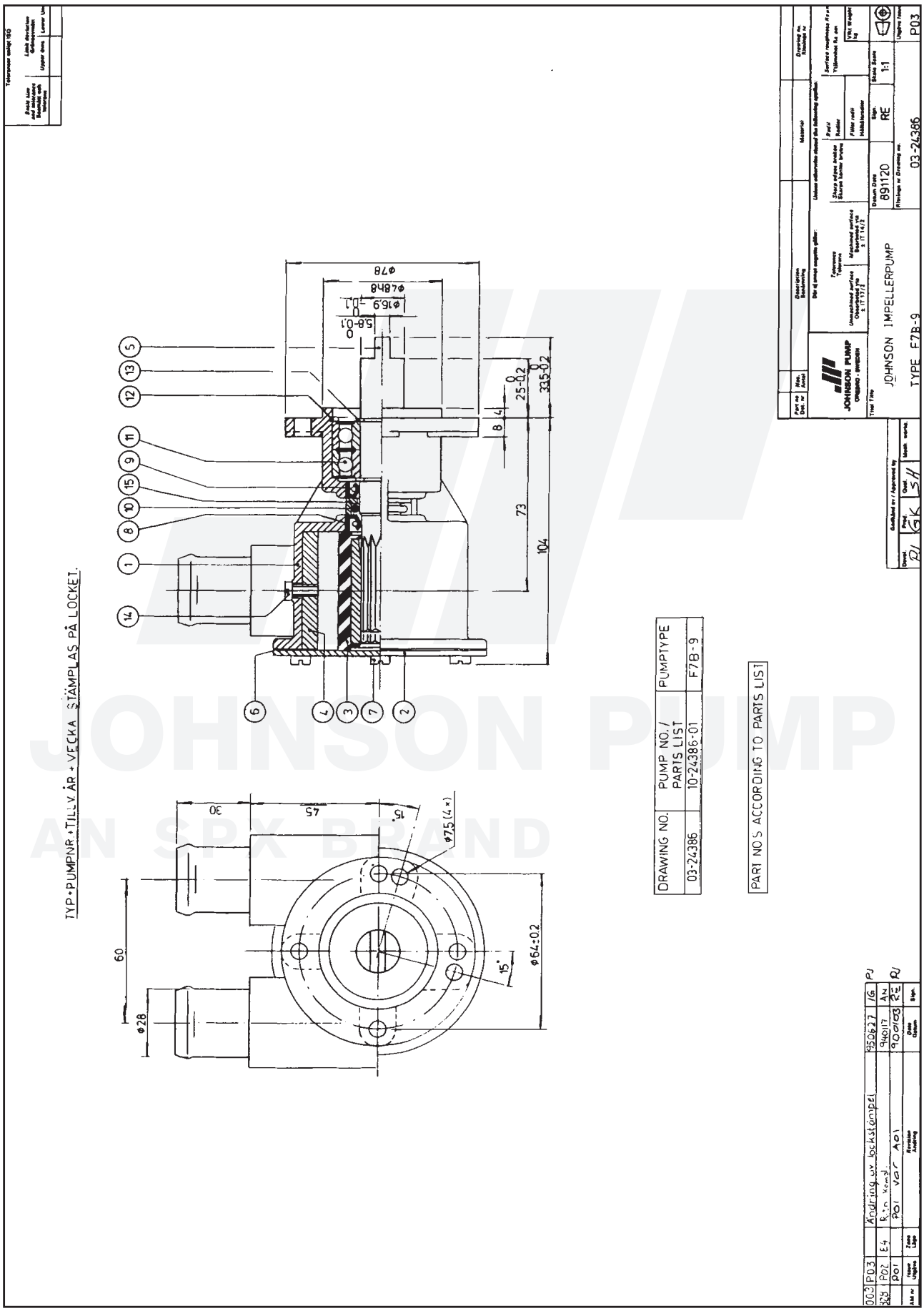

JOHNSON PUMP
AN SPX BRAND

F7B-9 Impeller pump
Art. No. 10-24390-01

Service Kit No. 09-45592

Part No.	Description GB	Position	Quantity
01-24125	Body	1	1
01-42441	End cover	2	1
08-1028B	Impeller	3	1
01-42676	Cam	4	1
01-46209	Shaft	5	1
01-42445	Gasket	6	1
05-04-174	Screw	7	6
05-29-105	Lipseal	8	2
05-06-501	O.ring	9	1
05-08-129	Ballbearing	10	2
05-34-130	Retaining ring	11	1
05-04-107	Screw	12	1
01-45181	Washer	13	1
01-46210	Coupling	14	1

JOHNSON PUMP
AN SPX BRAND

The product, i.e. concept, design and construction, is the property of SPX Johnson Pump Marine AB

10-24390 pump F7B-9

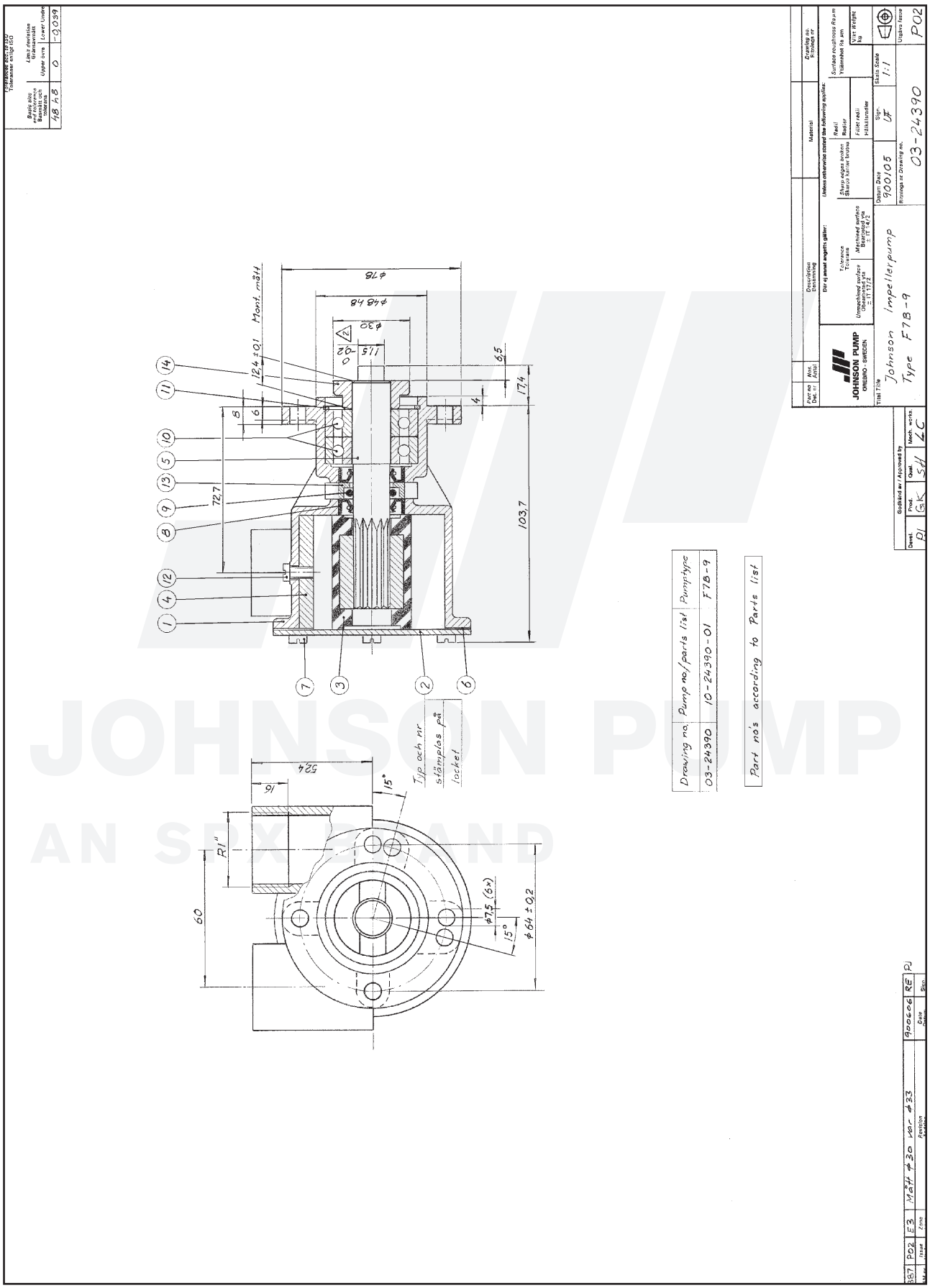

F7B-9 Impeller pump
Art. No. 10-24394-01

Service Kit No. 09-45592

Part No.	Description GB	Position	Quantity
01-24393	Body	1	1
01-46242	End cover	2	1
08-1028B	Impeller	3	1
01-42679	Cam	4	1
01-45844	Shaft	5	1
01-42445	Gasket	6	1
05-04-550	Screw	7	6
05-29-105	Lipseal	8	2
05-06-501	O.ring	9	1
05-08-129	Ballbearing	10	2
05-34-130	Retainging ring	11	1
05-04-144	Screw	12	1
05-34-21	Retaining ring	13	1
01-45181	Washer	14	1

The product, i.e. concept, design and construction, is the property of SPX Johnson Pump Marine AB

10-24394 pump F7B-9

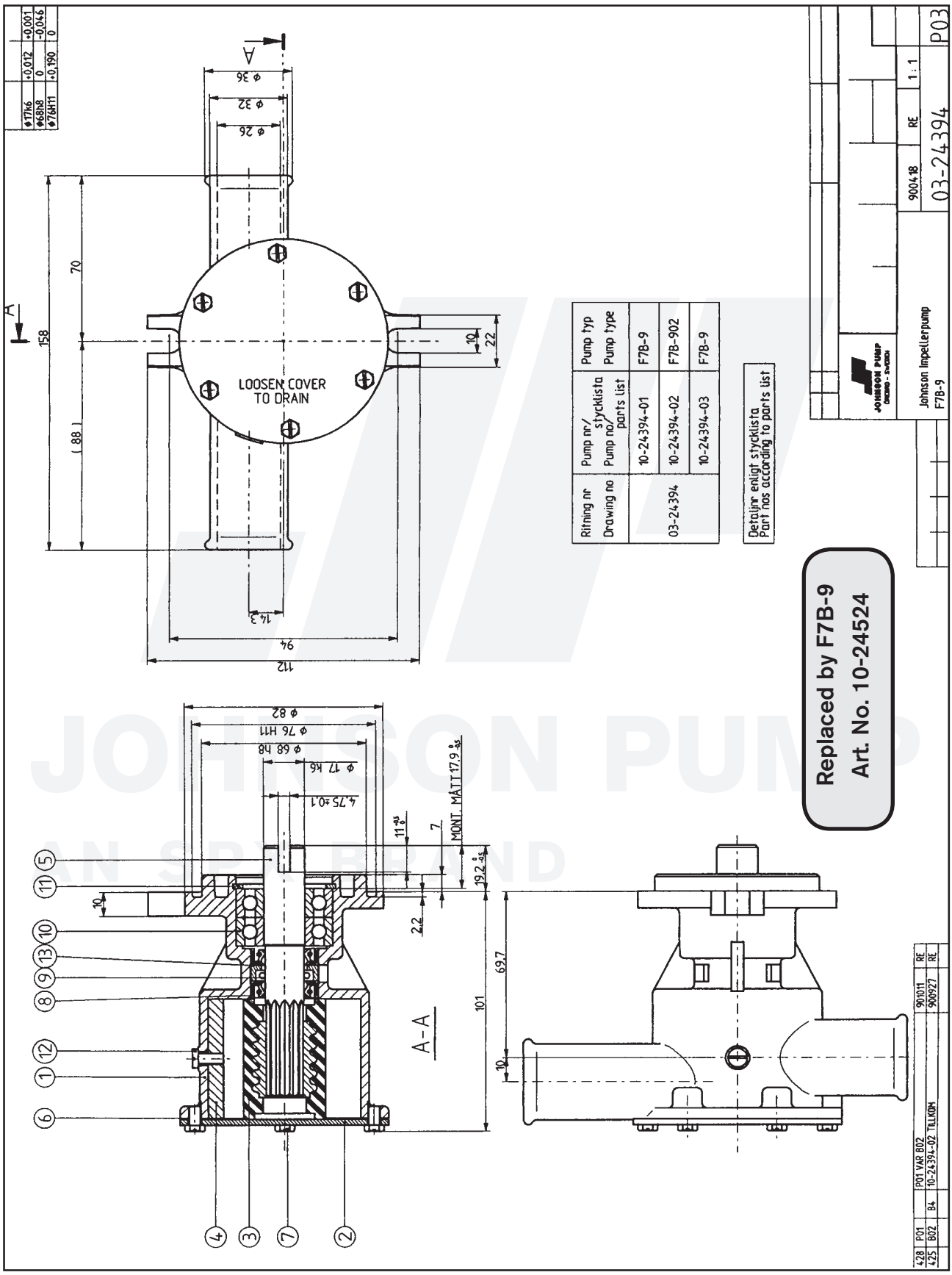

Replaced by F7B-9
Art. No. 10-24524

JOHNSON PUMP
AN SPX BRAND

F7B-9 Impeller pump
Art. No. 10-24398-01

Part no.	Description GB	Position	Quantity
01-24125-2	BODY F7B-9	1	1
01-35670	SHAFT F7B-9	2	1
01-42679	CAM 1/1 F7B/F70B	3	1
08-1028B	IMPELLER	4	1
01-42441	ENDCOVER F7B-	5	1
01-42445	GASKET F4B/F7B-	6	1
01-45181	WASHER F5/F7B-9	7	1
01-35213-2	FLANGE F7B-9	8	1
01-45754	GASKET F7B-9	9	1
0.0279.033	SCREW M5X8 ISO1207 BRASS	10	6
01-46794-01	SCREW 12-24UNCX9.5 BRASS	11	1
0.0141.911	TAPBOLT M6X20 DIN933 STZN	12	4
0.0353.402	WASHER D6,5 X D11,8 X1,6	13	4
0.2233.001	LIP SEAL 16X28X7 DPSM	14	2
0.2173.402	O-RING 15.3X2.4 SS1586 NBR70	15	1
0.0370.516	EXT. CIRCLIP D16 DIN471 PHB	16	1
0.0371.040	RETAIN. RING BORE D40 DIN472 SPRST	17	1
0.0370.017	EXT. CIRCLIP D17 DIN471 ST	18	1
0.3431.483	BALL BEARING 6203	19	2

F7B-9 Impeller pump
Art. No. 10-24398-02

Part No.	Description GB	Position	Quantity
01-24125-2	BODY F7B-9	1	1
01-35670	SHAFT F7B-9	2	1
01-42679	CAM 1/1 F7B/F70B	3	1
08-1028B	IMPELLER	4	1
01-42441	ENDCOVER F7B-	5	1
01-42445	GASKET F4B/F7B-	6	1
01-45181	WASHER F5/F7B-9	7	1
01-35213-2	FLANGE F7B-9	8	1
01-45754	GASKET F7B-9	9	1
0.0279.033	SCREW M5X8 ISO1207 BRASS	10	6
01-46794-01	SCREW 12-24UNCX9.5 BRASS	11	1
0.0141.911	TAPBOLT M6X20 DIN933 STZN	12	4
0.0353.402	WASHER D6,5 X D11,8 X1,6	13	4
0.2233.001	LIP SEAL 16X28X7 DPSM	14	2
0.2173.402	O-RING 15.3X2.4 SS1586 NBR70	15	1
0.0370.516	EXT. CIRCLIP D16 DIN471 PHB	16	1
0.0371.040	RETAIN. RING BORE D40 DIN472 SPRST	17	1
0.0370.017	EXT. CIRCLIP D17 DIN471 ST	18	1
0.3431.483	BALL BEARING 6203	19	2

The product, i.e. concept, design and construction, is the property of SPX Johnson Pump Marine AB

10-24398 pump F7B-9

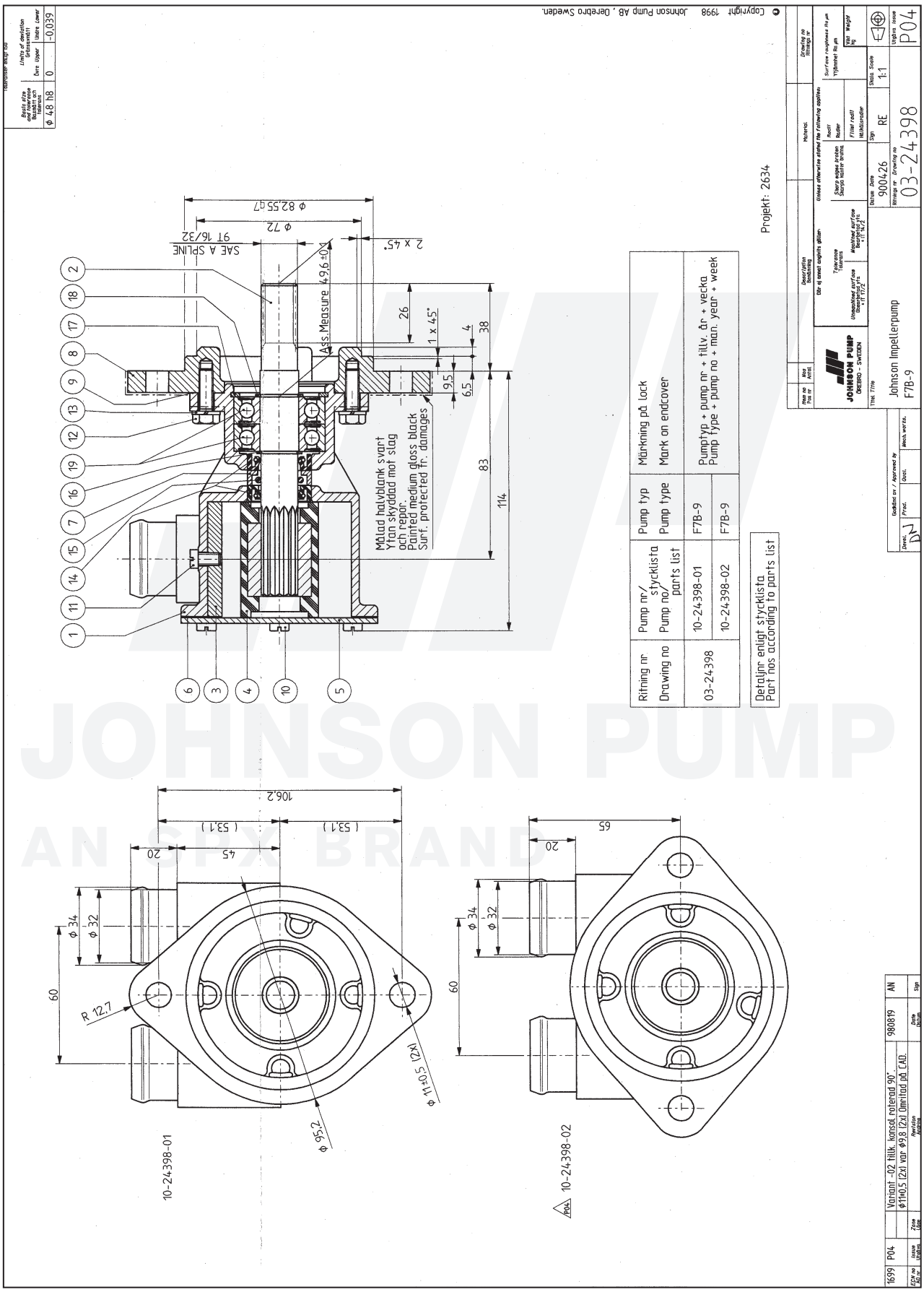

JOHNSON PUMP
AN SPX BRAND

F7B-9 Impeller pump
Art. No. 10-24431-01

Service Kit No. 0.2233.001

Part no.	Description GB	Position	Quantity
01-42441	ENDCOVER F7B-	1	1
01-24125-3	BODY F7B-9	2	1
01-42445	GASKET F4B/F7B-	3	1
08-1028B	IMPELLER	4	1
01-42679	CAM 1/1 F7B/F70B	5	1
01-45248	SHAFT F7B-9	6	1
0.3431.483	BALL BEARING 6203	7	2
0.0279.033	SCREW M5X8 ISO1207 BRASS	8	6
0.2233.001	LIP SEAL 16X28X7 DPSM	9	2
0.2173.402	O-RING 15.3X2.4 SS1586 NBR70	10	1
0.0371.040	RETAIN. RING BORE D40 DIN472 SPRST	11	1
01-46794-01	SCREW 12-24UNCX9.5 BRASS	12	1
01-45181	WASHER F5/F7B-9	13	1

The product, i.e. concept, design and construction, is the property of SPX Johnson Pump Marine AB

10-24431 pump F7B-9

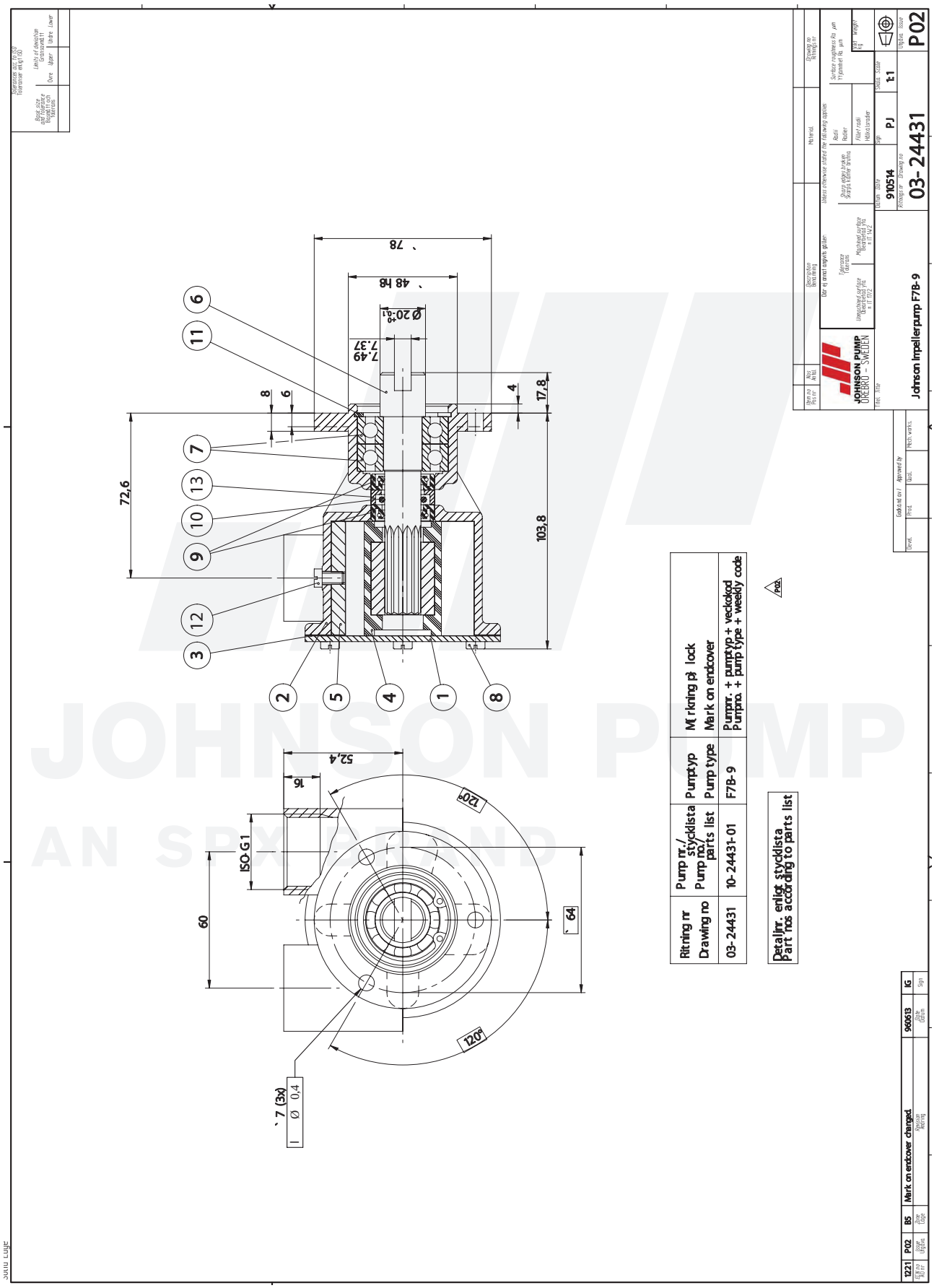

F7B-9 Impeller pump
Art. No. 10-24445-01

Service Kit No. 09-45590

Part no.	Description GB	Position	Quantity
01-21862-2	BODY F7B-1/-3/-9	1	1
01-24446-1	BEARING HOUSING F5B/F7B-9	2	1
01-35713	SHAFT F5B/F7B-9	3	1
01-42400	PIN F35B-/F7B/F70B	4	1
01-42441	ENDCOVER F7B-	5	1
01-42443	WEARPLATE F7B/F70B	6	1
01-42445	GASKET F4B/F7B-	7	1
01-42679	CAM 1/1 F7B/F70B	8	1
01-42402	SLINGER F5/F7B-	9	1
01-45174	WASHER F7B-3000/-5000	10	1
01-45323	SPACER F5/F7B-9	11	1
0.0353.402	WASHER D6,5 X D11,8 X1,6	12	1
0.0144.001	BOLT 1/4”-20UNCX57 SS1943 STZN	13	1
01-46794-01	SCREW 12-24UNCX9.5 BRASS	14	1
01-46794-05	SCREW 10-32UNFX8 BRASS	15	6
0.0194.001	NUT 1/4”-20UNC SS1989 8.8ZN	16	1
0.3431.484	BALL BEARING 6204 ST	17	2
0.2233.350	LIP SEAL 20X32X7 DPSM	18	1
0.2247.050	MECH.SEAL COMPL 5/8” 106BT2C1	19	1
0.0370.516	EXT. CIRCLIP D16 DIN471 PHB	20	1
0.0370.020	EXT. CIRCLIP D20 DIN471 ST	21	1
0.0371.047	RETAIN. RING BORE D47 DIN472 SPRST	22	1
08-1028B	IMPELLER	23	1

The product, i.e. concept, design and construction, is the property of SPX Johnson Pump Marine AB

10-24445 pump F7B-9

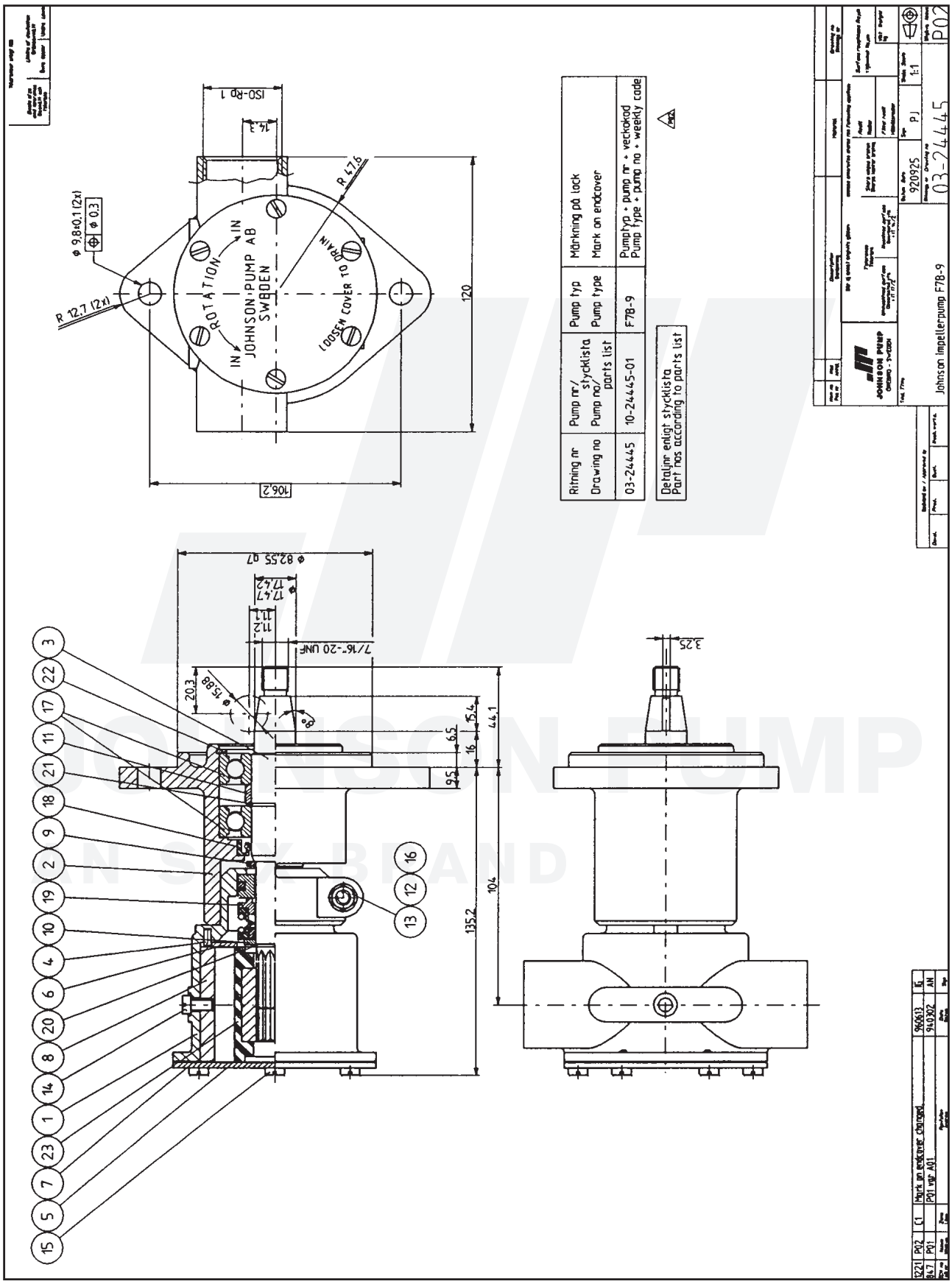

F7B-902 Impeller pump
Art. No. 10-24475-01

Service Kit No. 09-45592

Part. No.	Description GB	Position	Quantity
01-24474-1	BODY F7B-9	1	1
01-42441	ENDCOVER F7B-	2	1
01-42445	GASKET F4B/F7B-	3	1
01-42584	CAM 1/2 F7B	4	1
01-45181	WASHER F5/F7B-9	5	1
01-46476	SHAFT F7B-9	6	1
01-46794-06	SCREW 12-24UNCX6.5 BRASS	7	1
0.0279.033	SCREW M5X8 ISO1207 BRASS	8	6
0.2173.402	O-RING 15.3X2.4 SS1586 NBR70	9	1
0.3431.742	BALL BEARING 6203 2 RS1 ST	10	2
0.2233.001	LIP SEAL 16X28X7 DPSM	11	2
0.0370.017	EXT. CIRCLIP D17 DIN471 ST	12	1
0.0371.040	RETAIN. RING BORE D40 DIN472 SPRST	13	1
08-1028B	IMPELLER	14	1

F7B-903 Impeller pump
Art. No. 10-24475-02

Service Kit No. 09-45592

Part. No.	Description GB	Position	Quantity
01-24474-1	BODY F7B-9	1	1
01-42441	ENDCOVER F7B-	2	1
01-42445	GASKET F4B/F7B-	3	1
01-42442	CAM 2/3 F7B/F70B	4	1
01-45181	WASHER F5/F7B-9	5	1
01-46476	SHAFT F7B-9	6	1
01-46794-07	SCREW 12-24UNCX8 BRASS	7	1
0.0279.033	SCREW M5X8 ISO1207 BRASS	8	6
0.2173.402	O-RING 15.3X2.4 SS1586 NBR70	9	1
0.3431.742	BALL BEARING 6203 2 RS1 ST	10	2
0.2233.001	LIP SEAL 16X28X7 DPSM	11	2
0.0370.017	EXT. CIRCLIP D17 DIN471 ST	12	1
0.0371.040	RETAIN. RING BORE D40 DIN472 SPRST	13	1
08-1028B	IMPELLER	14	1

JOHNSON PUMP
AN SPX BRAND

The product, i.e. concept, design and construction, is the property of SPX Johnson Pump Marine AB

10-24475 pump F7B-02/903

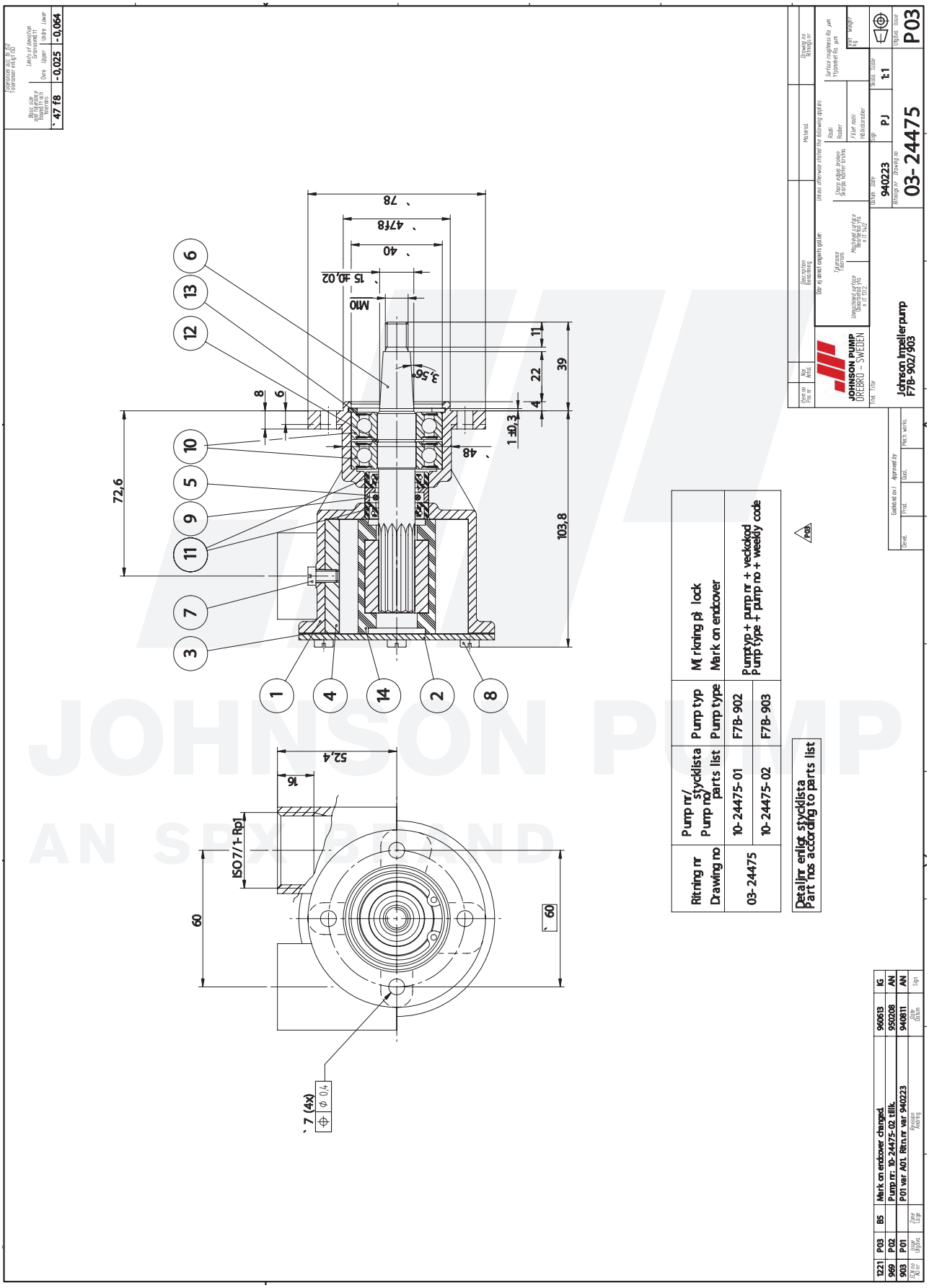

JOHNSON PUMP
AN SPX BRAND

F7B-9 Impeller pump
Art. No. 10-24524-02

Part No.	Description GB	Position	Quantity
01-24521-1	BODY F7B-9 (VP)	1	1
01-46594-1	ENDCOVER F7B	2	1
08-1028B-01	IMPELLER VP825941	3	1
01-45844	SHAFT F7B-9	4	1
0.2172.012	O-RING 63,22X1,78 NBR70	5	1
0.0141.502	SCREW M5X8 DIN933SLOTTED BRASS	6	6
01-45181	WASHER F5/F7B-9	7	1
0.2233.001	LIP SEAL 16X28X7 DPSM	8	2
0.2173.402	O-RING 15.3X2.4 SS1586 NBR70	9	1
0.3431.483	BALL BEARING 6203	10	2
0.0371.040	RETAIN. RING BORE D40 DIN472 SPRST	11	1
01-46816	WEAR PLATE F7B-9	12	1
0.0633.712	PLUG TYPE 278 D33.2MM CERBO	0	2

F7B-9 Impeller pump
Art. No. 10-24524-04

Part no.	Description GB	Position	Quantity
01-24521-4	BODY F7B-9 (VP)	1	1
01-46594-1	ENDCOVER F7B	2	1
08-1028B-01	IMPELLER VP825941	3	1
01-45844	SHAFT F7B-9	4	1
0.2172.012	O-RING 63,22X1,78 NBR70	5	1
0.0141.502	SCREW M5X8 DIN933SLOTTED BRASS	6	6
01-45181	WASHER F5/F7B-9	7	1
0.2233.001	LIP SEAL 16X28X7 DPSM	8	2
0.2173.402	O-RING 15.3X2.4 SS1586 NBR70	9	1
0.3431.483	BALL BEARING 6203	10	2
0.0371.040	RETAIN. RING BORE D40 DIN472 SPRST	11	1
01-46816-2	WEAR PLATE F7B-9	12	1
0.0633.712	PLUG TYPE 278 D33.2MM CERBO	0	2

The product, i.e. concept, design and construction, is the property of SPX Johnson Pump Marine AB

10-24524 pump F7B-9

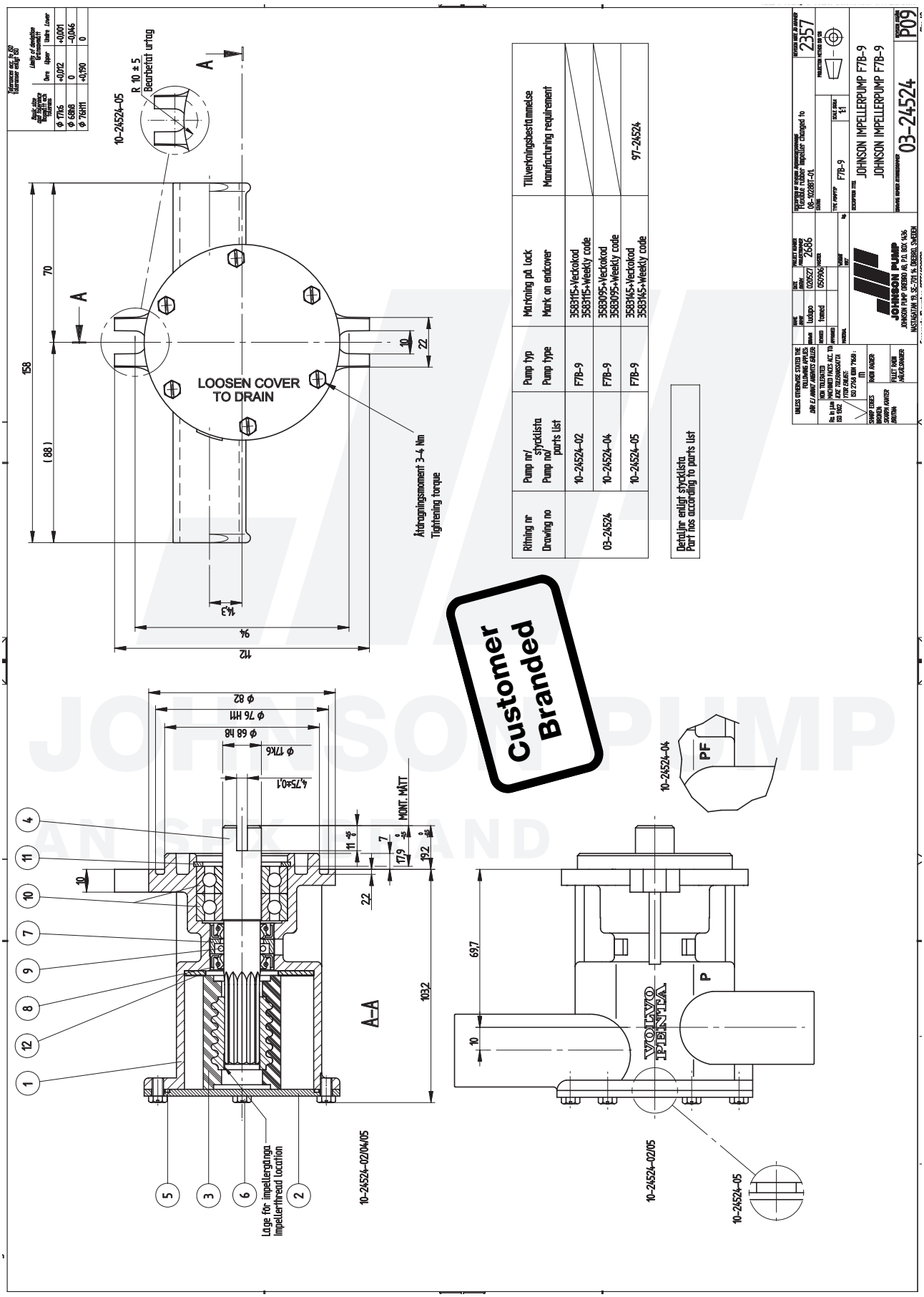

JOHNSON PUMP
AN SPX BRAND

F7B-9 Impeller pump

Art.No. 10-24535-01

Part. No.	Description GB	Position	Quantity
01-13203-1	BODY F7B-9	1	1
01-35838	SHAFT F7B	2	1
01-46647	WEAR PLATE F7B SS	3	1
01-46648-1	ENDCOVER F7B	4	1
0.0141.502	SCREW M5X8 DIN933SLOTTED BRASS	5	6
0.3431.523	BALL BEARING 6303 ST	6	2
0.0371.047	RETAIN. RING BORE D47 DIN472 SPRST	7	1
01-42537	SPACER F5/F7B-9	8	1
0.2233.017	LIP SEAL 16X32X7 DPSM	9	1
0.0370.017	EXT. CIRCLIP D17 DIN471 ST	10	1
0.2247.050	MECH.SEAL COMPL 5/8" 106BT2C1	11	1
01-45680	WASHER F5B/F6B/F7B	12	1
0.0370.516	EXT. CIRCLIP D16 DIN471 PHB	13	1
0.2172.012	O-RING 63,22X1,78 NBR70	14	1
08-1028B	IMPELLER	15	1
0.2173.471	O-RING 14.3X2.4 SS1586 NBR70	16	1

The product, i.e. concept, design and construction, is the property of SPX Johnson Pump Marine AB

10-24535 pump F7B-903

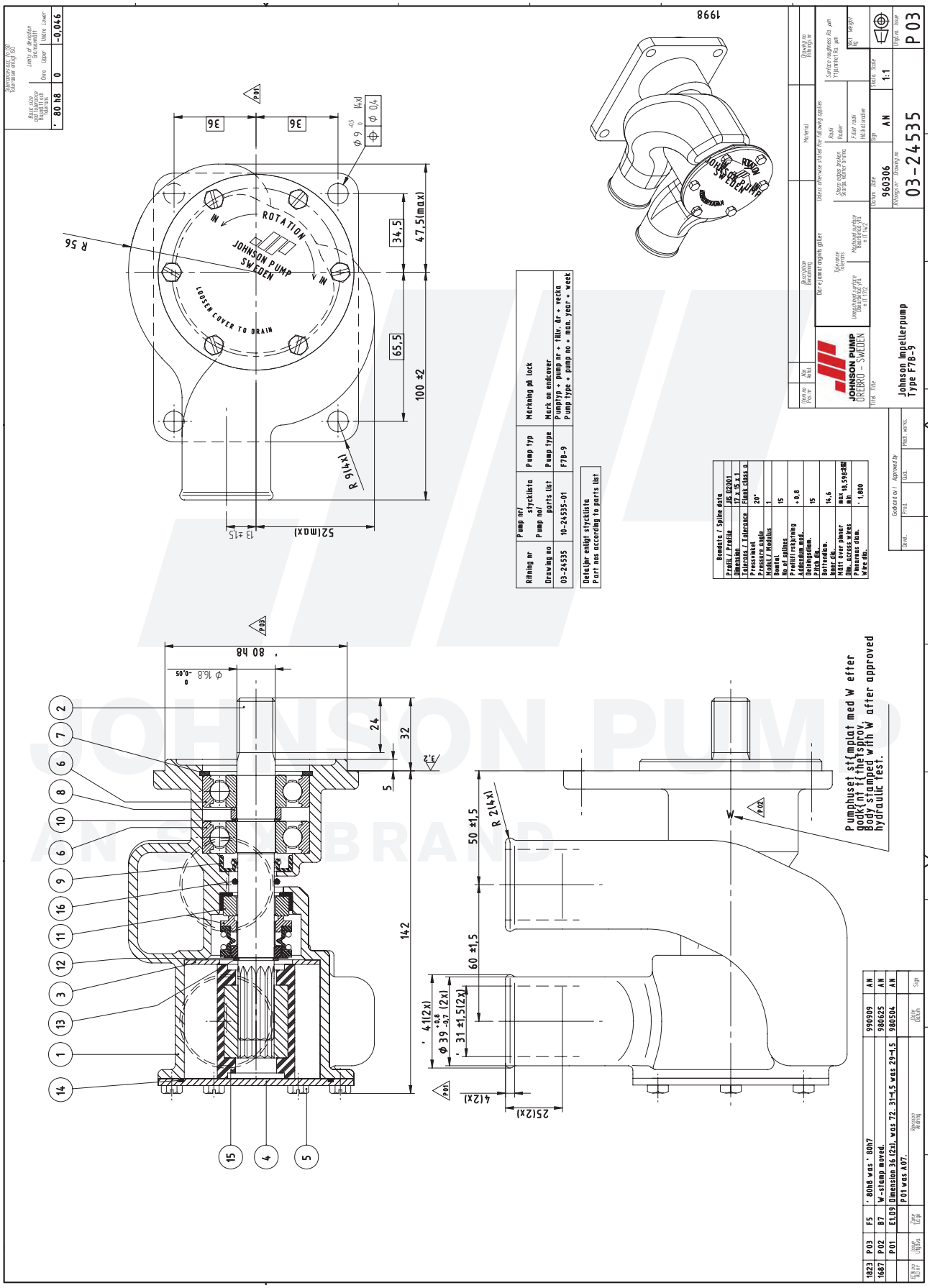

JOHNSON PUMP
AN ITT BRAND

F7B-903 Impeller pump
Art. No. 10-24542-01

Service Kit No. 09-45592

Part no.	Description GB	Position	Quantity
01-24125-2	BODY F7B-9	1	1
01-42441	ENDCOVER F7B-	2	1
08-1028B	IMPELLER	3	1
01-42442	CAM 2/3 F7B/F70B	4	1
01-46674	SHAFT F7B-903	5	1
01-42445	GASKET F4B/F7B-	6	1
0.0138.987	TAP BOLT M 5X8 M DIN933 A2-70	7	6
0.2233.001	LIP SEAL 16X28X7 DPSM	8	1
0.2234.482	OIL SEAL 17X28X7 DIN3760A R NBR	9	1
0.2173.402	O-RING 15.3X2.4 SS1586 NBR70	10	1
0.3431.742	BALL BEARING 6203 2 RS1 ST	11	2
0.0371.040	RETAIN. RING BORE D40 DIN472 SPRST	12	1
0.0370.017	EXT. CIRCLIP D17 DIN471 ST	13	2
01-46794-07	SCREW 12-24UNCX8 BRASS	14	1
01-45181	WASHER F5/F7B-9	15	1
0.0503.027	WOODRUFFKEY 3X4.8X13 ST	16	1

The product, i.e. concept, design and construction, is the property of SPX Johnson Pump Marine AB

10-24542 pump F7B-903

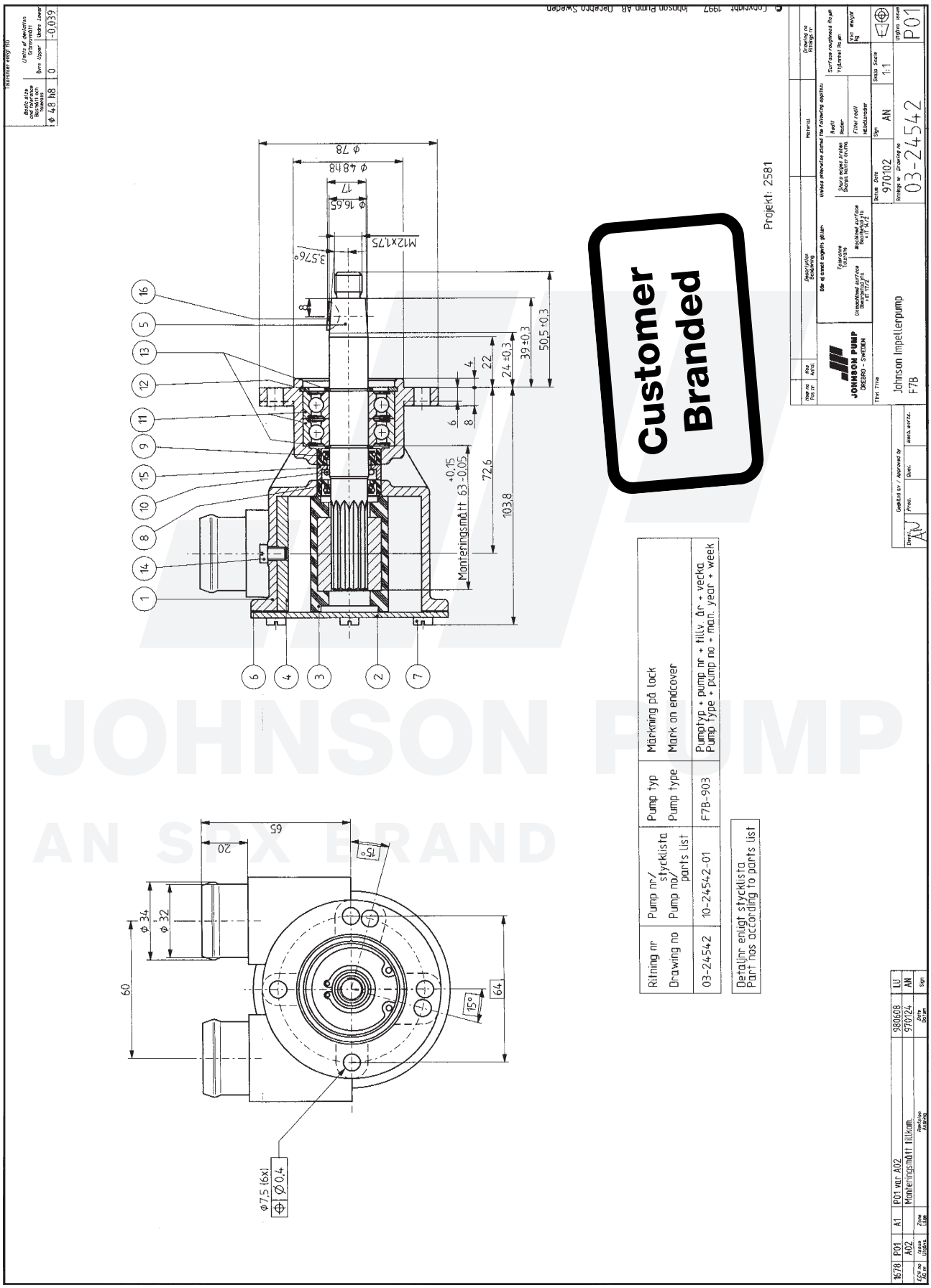

JOHNSON PUMP
AN SPX BRAND

F7B-903 Impeller pump
Art. No. 10-24567-01

Part no.	Description GB	Position	Quantity
01-24125-2	BODY F7B-9	1	1
01-42441	ENDCOVER F7B-	2	1
08-1028B	IMPELLER	3	1
01-42442	CAM 2/3 F7B/F70B	4	1
01-35878	SHAFT F7B-9	5	1
01-42445	GASKET F4B/F7B-	6	1
0.0138.987	TAP BOLT M 5X8 M DIN933 A2-70	7	6
0.2233.001	LIP SEAL 16X28X7 DPSM	8	1
0.2234.482	OIL SEAL 17X28X7 DIN3760A R NBR	9	1
0.2173.402	O-RING 15.3X2.4 SS1586 NBR70	10	1
0.3431.742	BALL BEARING 6203 2 RS1 ST	11	2
0.0371.040	RETAIN. RING BORE D40 DIN472 SPRST	12	1
0.0370.017	EXT. CIRCLIP D17 DIN471 ST	13	2
01-46794-07	SCREW 12-24UNCX8 BRASS	14	1
01-45181	WASHER F5/F7B-9	15	1

The product, i.e. concept, design and construction, is the property of SPX Johnson Pump Marine AB

10-24567 pump F7B-9

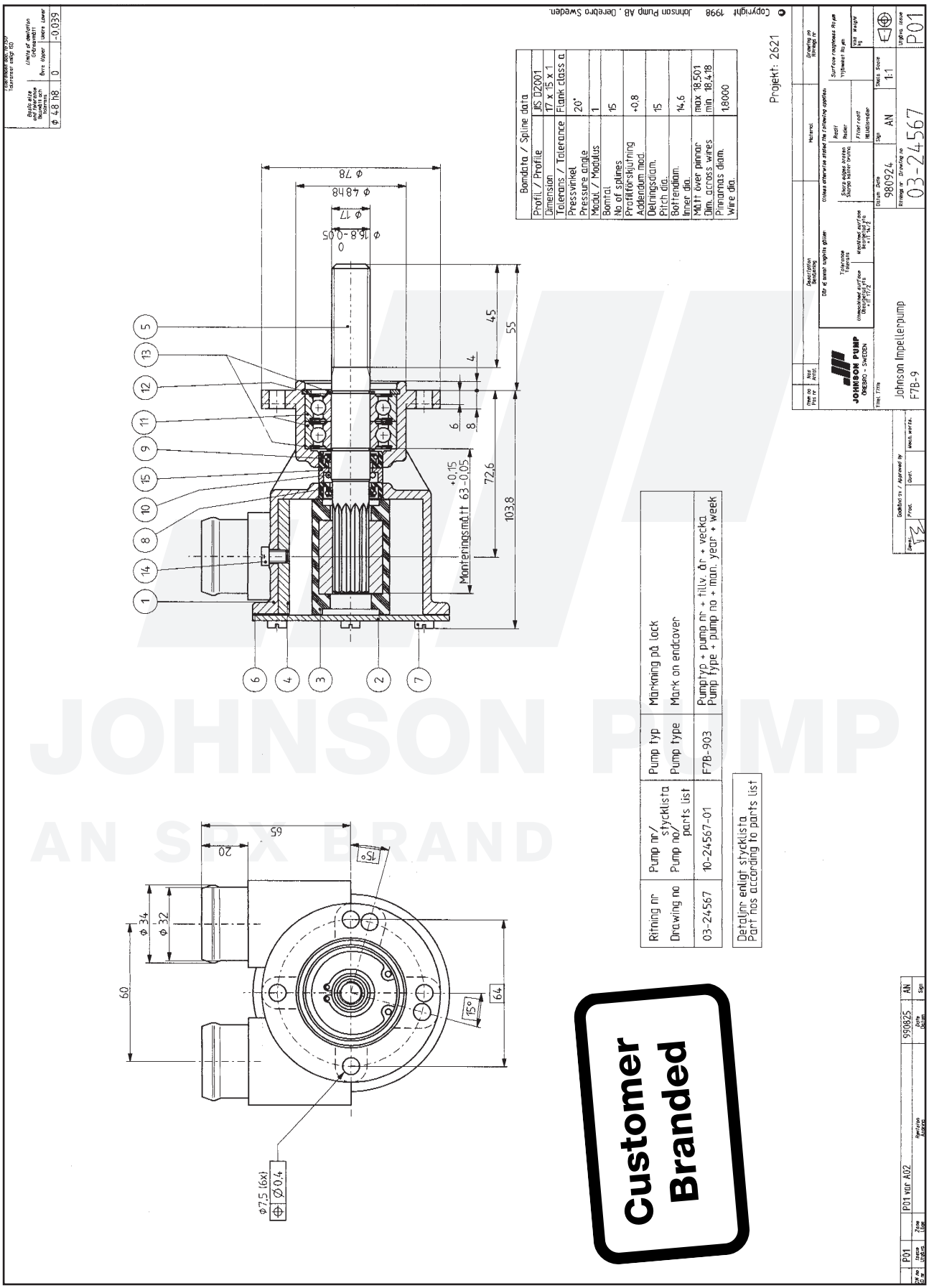

JOHNSON PUMP
AN SPX BRAND

F7B-9 Impeller pump
Art. No. 10-24580-01

Part no.	Description GB	Position	Quantity
01-22151-3	BODY F7B-9	1	1
01-46899	CAM 1/1 F7B	2	1
08-1028B	IMPELLER	3	1
01-35897	SHAFT F7B-9	4	1
01-42441	ENDCOVER F7B-	5	1
01-42445	GASKET F4B/F7B-	6	1
01-42443	WEARPLATE F7B/F70B	7	1
01-42400	PIN F35B-/F7B/F70B	8	1
01-24579-1	BEARING HOUSING F7B-9	9	1
38-80963	DISTANCE SLEEVE RBS4	10	1
01-45680	WASHER F5B/F6B/F7B	11	1
01-42402	SLINGER F5/F7B-	12	1
0.0370.516	EXT. CIRCLIP D16 DIN471 PHB	13	1
0.0370.017	EXT. CIRCLIP D17 DIN471 ST	14	1
0.0371.040	RETAIN. RING BORE D40 DIN472 SPRST	15	1
0.0503.010	WOODRUFKEY 3X3.7X10 DIN6888 ST	16	1
0.2247.050	MECH.SEAL COMPL 5/8” 106BT2C1	17	1
0.2233.017	LIP SEAL 16X32X7 DPSM	18	1
0.3431.742	BALL BEARING 6203 2 RS1 ST	19	2
01-46794-05	SCREW 10-32UNFX8 BRASS	20	6
0.0279.035	SCREW MCS M5X10 MÄSSING	21	1
0.0144.001	BOLT 1/4”-20UNCX57 SS1943 STZN	22	1
0.0194.001	NUT 1/4”-20UNC SS1989 8.8ZN	23	1
0.0353.402	WASHER D6,5 X D11,8 X1,6	24	1
01-46138	GASKET F7B-9	26	1

The product, i.e. concept, design and construction, is the property of SPX Johnson Pump Marine AB

10-24580 pump F7B-9

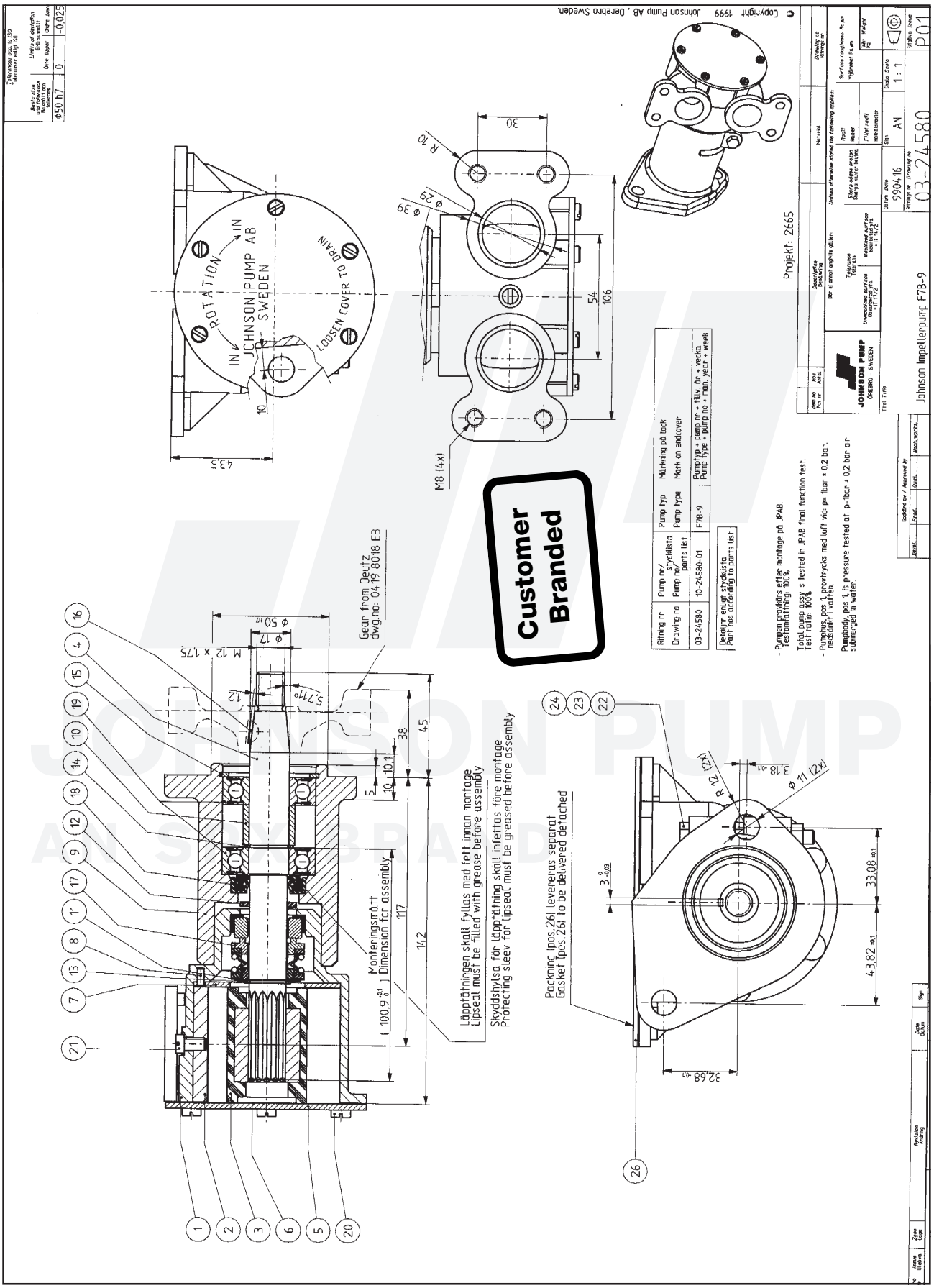

JOHNSON PUMP
AN SPX BRAND

F7B-9 Impeller pump

Art. No. 10-24630-01

Part. No	Description GB	Position	Quantity
01-13280	BODY F7B-9	1	1
01-35964	SHAFT F7B-9	2	1
01-46648-3	ENDCOVER F7B	3	1
08-1028B	IMPELLER	4	1
01-46899	CAM 1/1 F7B	5	1
01-42400	PIN F35B-/F7B/F70B	6	1
01-46798-2	WEAR PLATE F7B	7	1
01-45680	WASHER F5B/F6B/F7B	8	1
0.2233.403	LIP SEAL 17X40X7 NBR	9	1
01-46924	SPACER F7B-9	10	1
0.0279.301	SCREW M5X8 ISO1207 A4	11	6
0.0279.033	SCREW M5X8 ISO1207 BRASS	12	1
0.2172.012	O-RING 63,22X1,78 NBR70	13	1
0.2230.015	V-RING 15.5-17.5 NBR/65SH	14	1
0.3431.742	BALL BEARING 6203 2 RS1 ST	15	2
0.2247.022	MECH.SEAL COMPL D16	16	1
0.0371.040	RETAIN. RING BORE D40 DIN472 SPRST	17	1
0.0370.017	EXT. CIRCLIP D17 DIN471 ST	18	1
0.0370.516	EXT. CIRCLIP D16 DIN471 PHB	19	1
0.2173.886	O-RING D 82X4 (NBR 70)	20	1
0.0503.011	WOODRUFKEY 3x5 DIN6888 ST	21	1
0.0185.076	NYLOC NUT M12	22	1
0.3444.031	PLASTIC BAG 100x160 MM	23	1
01-47201	CLAMP F7 (VETUS)	24	2
0.0633.711	PLUG TYPE4303374 D32.8MM DBI	0	2

The product, i.e. concept, design and construction, is the property of SPX Johnson Pump Marine AB

10-24630 pump F7B-9

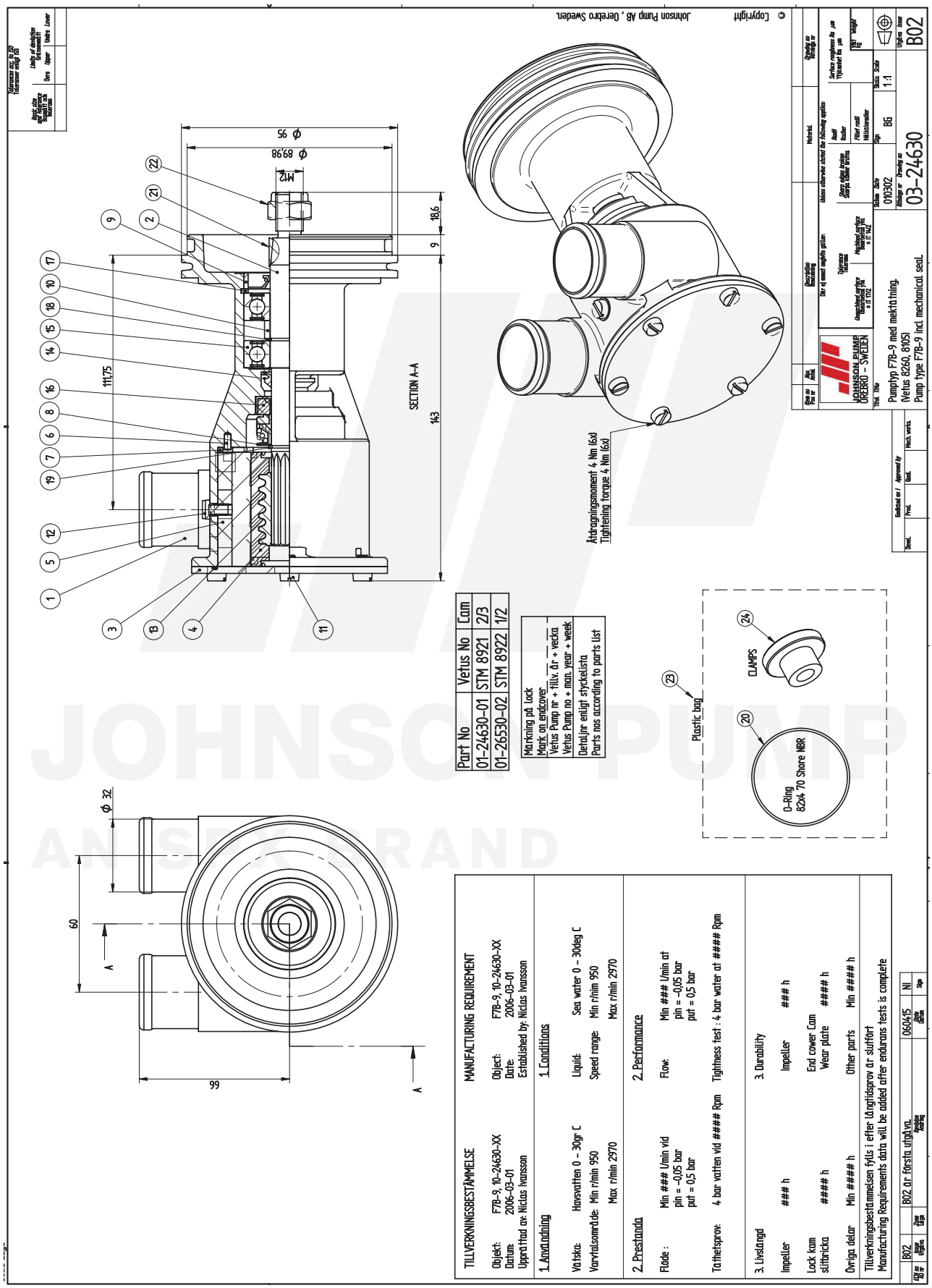

F7B-9 Impeller pump

Art. No. 10-24637-01

Part. No.	Description GB	Position	Quantity
01-13279-2	PUMP BODY F7B-9 STEYR	1	1
01-46648-3	ENDCOVER F7B	2	1
08-1028B	IMPELLER	3	1
01-35965-2	SHAFT F7B-9 STEYR	4	1
0.2172.012	O-RING 63,22X1,78 NBR70	5	1
0.0138.987	TAP BOLT M5X8 M DIN933 A2-70	6	6
01-46899	CAM 1/1 F7B	7	1
0.0279.033	SCREW M5X8 ISO1207 BRASS	8	1
0.0370.516	EXT. CIRCLIP D16 DIN471 PHB	9	1
01-46798-2	WEAR PLATE F7B	10	1
01-42400	PIN F35B-/F7B/F70B	11	1
01-45680	WASHER F5B/F6B/F7B	12	1
0.2247.022	MECH.SEAL COMPL D16	13	1
0.2230.015	V-RING 15.5-17.5 NBR/65SH	14	1
0.3431.742	BALL BEARING 6203 2 RS1 ST	15	2
0.0370.017	EXT. CIRCLIP D17 DIN471 ST	16	1
01-46009	SPACER F7B-9	17	1
0.0371.040	RETAIN. RING BORE D40 DIN472 SPRST	18	1
01-47047	CARRIER F7B STEYR	19	1
01-46797	LABEL	20	1
01-47055-2	PAINT PROTECTION ø 45	0	1

The product, i.e. concept, design and construction, is the property of SPX Johnson Pump Marine AB

10-24637 pump F7B-9

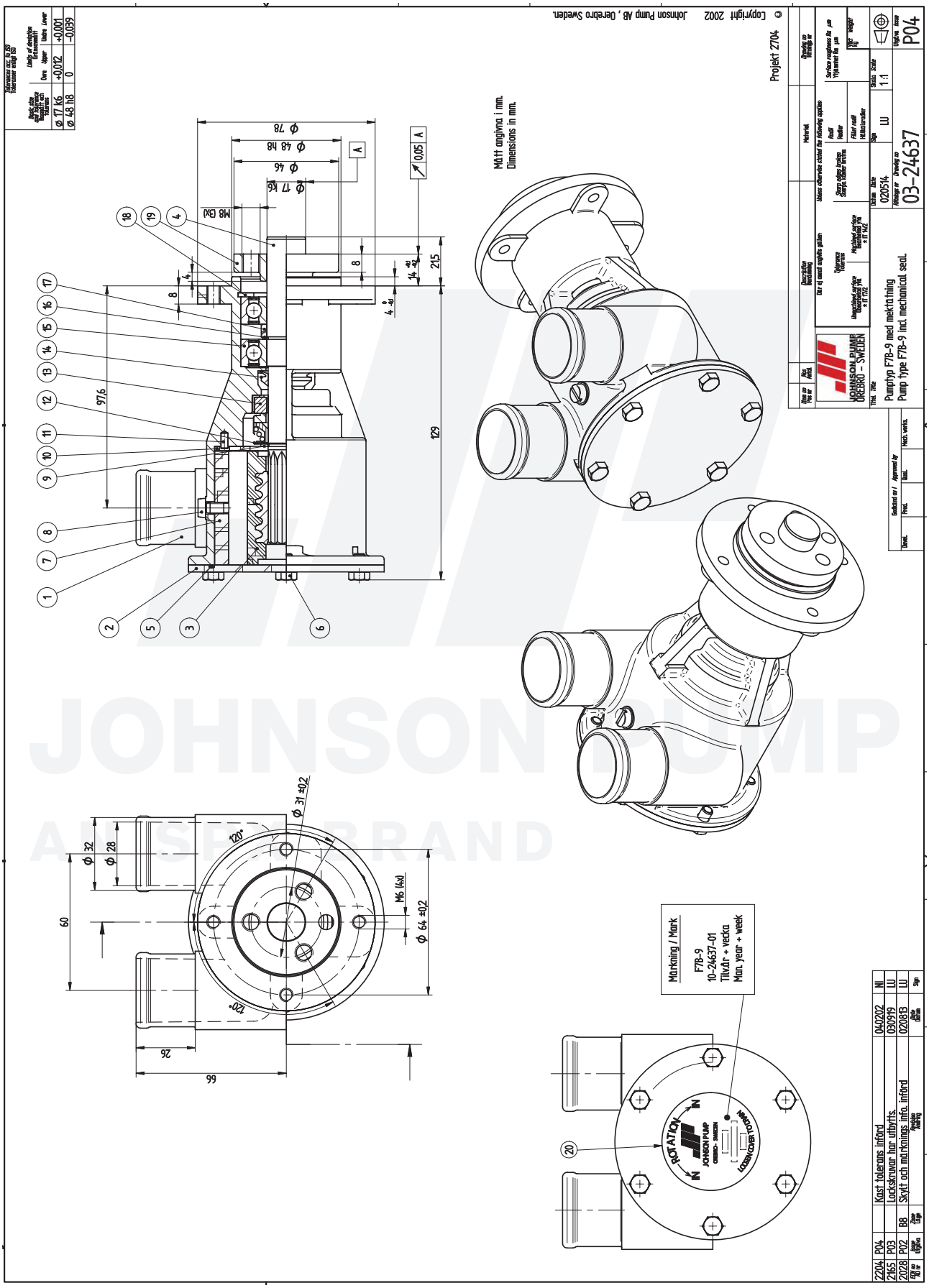

JOHNSON PUMP
ANSI STANDARD

F7B-903 Impeller pump

Art.No. 10-24654-01

Part. No.	Description GB	Position	Quantity
01-24125-6	BODY F7B-903	1	1
01-42441	ENDCOVER F7B-	2	1
08-1028B	IMPELLER	3	1
01-42442	CAM 2/3 F7B/F70B	4	1
01-46469	SHAFT F7B-9	5	1
01-42445	GASKET F4B/F7B-	6	1
0.0279.033	SCREW M5X8 ISO1207 BRASS	7	6
0.2233.001	LIP SEAL 16X28X7 DPSM	8	2
0.2173.402	O-RING 15.3X2.4 SS1586 NBR70	9	1
0.3431.742	BALL BEARING 6203 2 RS1 ST	10	2
0.0371.040	RETAIN. RING BORE D40 DIN472 SPRST	11	1
01-46794-07	SCREW 12-24UNCX8 BRASS	12	1
01-45181	WASHER F5/F7B-9	13	1
01-47047	CARRIER F7B STEYR	14	1

JOHNSON PUMP
AN SPX BRAND

The product, i.e. concept, design and construction, is the property of SPX Johnson Pump Marine AB

10-24654 pump F7B-9

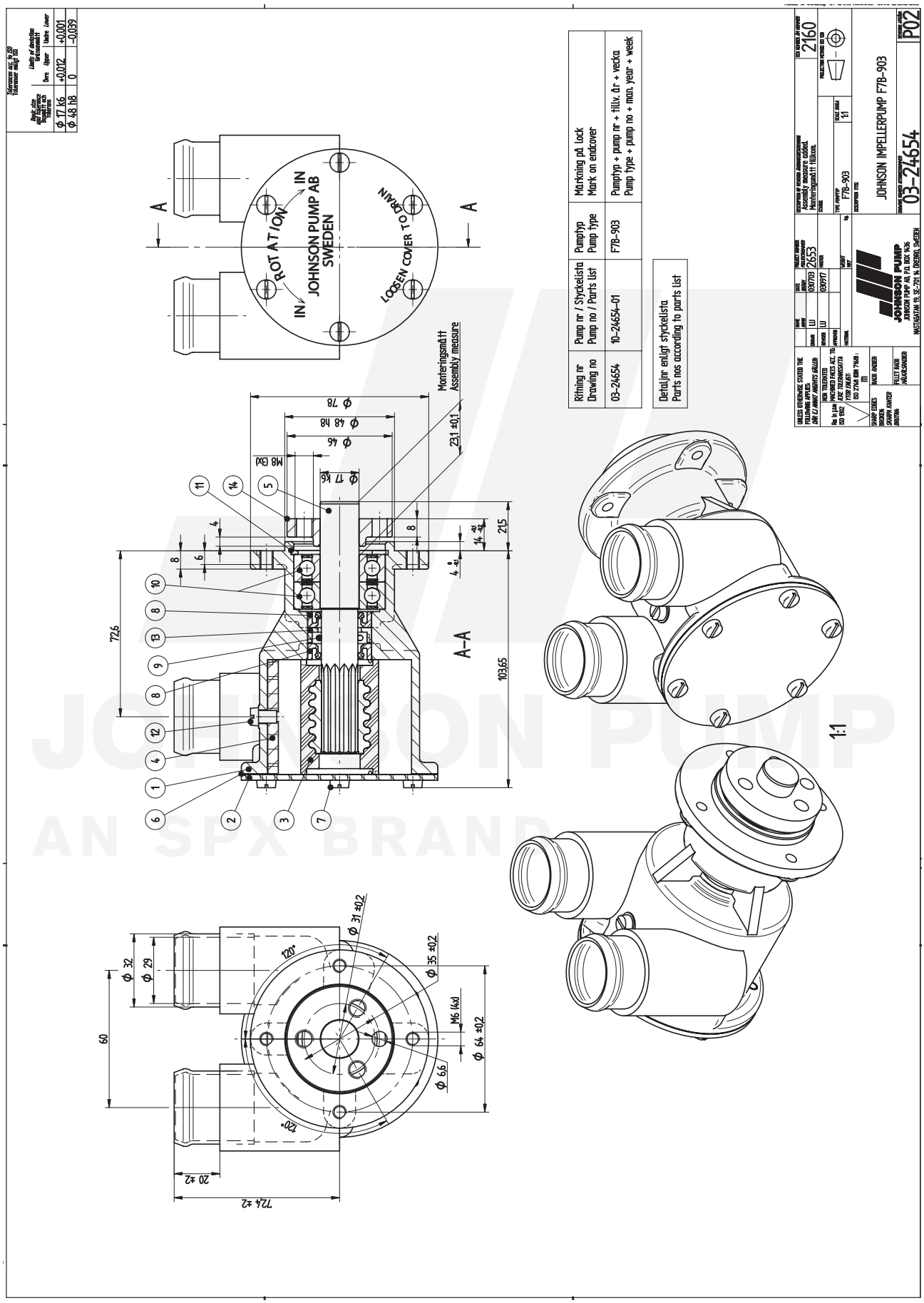

F7B-9 Impeller pump

Art. No. 10-24666-01

Part. No.	Descripiton GB	Position	Quantity
01-13366-1	PUMP BODY F7B-9	1	1
01-36044	SHAFT F7B-9	2	1
01-46648-3	ENDCOVER F7B	3	1
08-1028B	IMPELLER	4	1
01-46899	CAM 1/1 F7B	5	1
01-42400	PIN F35B-/F7B/F70B	6	1
01-46798-2	WEAR PLATE F7B	7	1
01-45680	WASHER F5B/F6B/F7B	8	1
01-46009	SPACER F7B-9	9	1
0.0279.301	SCREW M5X8 ISO1207 A4	10	6
0.0279.033	SCREW M5X8 ISO1207 BRASS	11	1
0.2172.012	O-RING 63,22X1,78 NBR70	12	1
0.2230.015	V-RING 15.5-17.5 NBR/65SH	13	1
0.3431.742	BALL BEARING 6203 2 RS1 ST	14	2
0.2247.022	MECH.SEAL COMPL D16	15	1
0.0371.040	RETAIN. RING BORE D40 DIN472 SPRST	16	1
0.0370.017	EXT. CIRCLIP D17 DIN471 ST	17	1
0.0370.516	EXT. CIRCLIP D16 DIN471 PHB	18	1
0.0503.027	WOODRUFFKEY 3X4.8X13 ST	19	1

JOHNSON PUMP

The product, i.e. concept, design and construction, is the property of SPX Johnson Pump Marine AB

10-24666 pump F7B-9

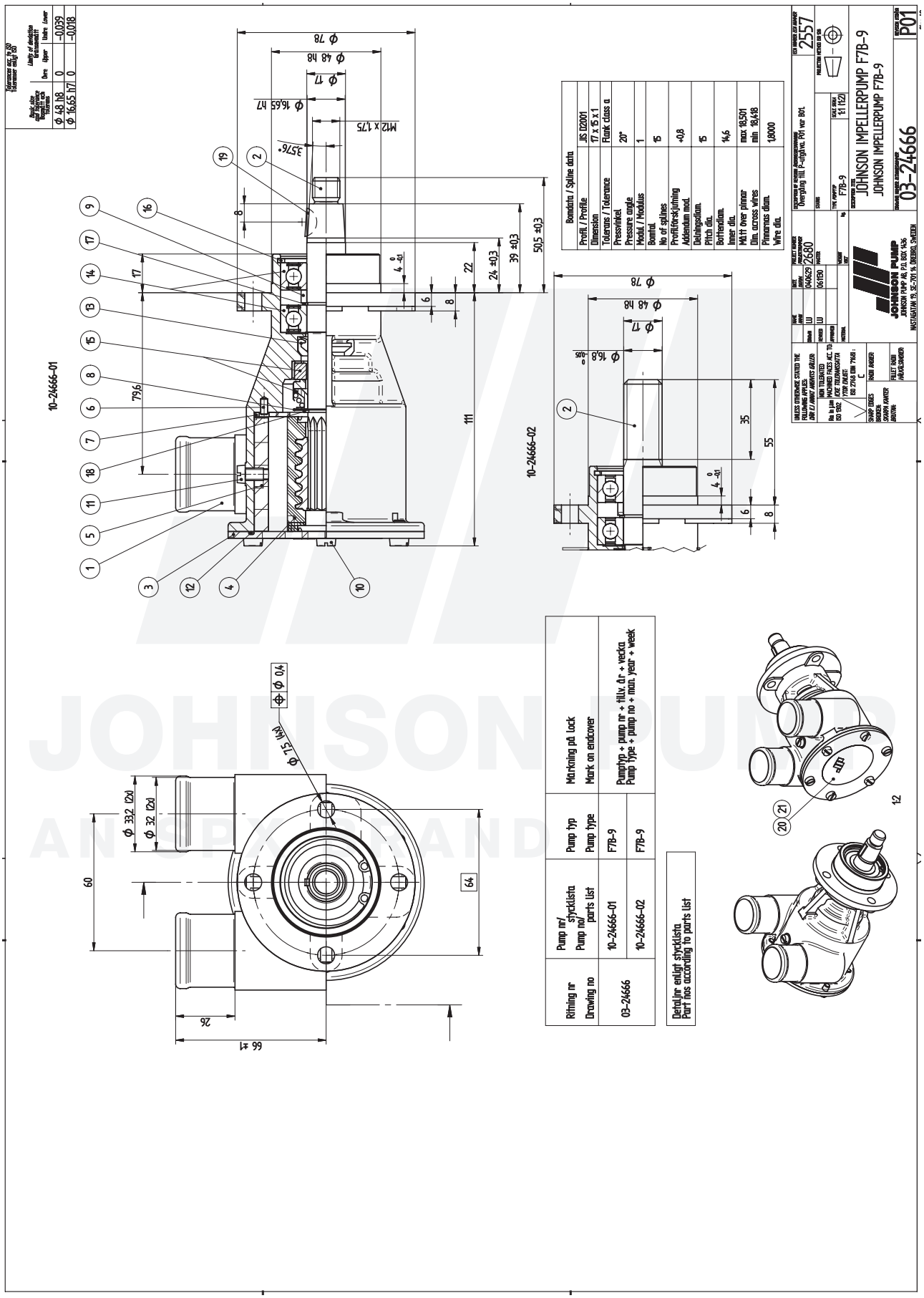

F7B-9 Impeller pump

Art.No. 10-24667-01

Part. No.	Description GB	Position	Quantity
01-13367-1	PUMP BODY F7B-9 JOHN DEERE	1	1
01-36046	SHAFT F7B-9 JOHN DEERE	2	1
01-46648-3	ENDCOVER F7B	3	1
08-1028B	IMPELLER	4	1
01-46899	CAM 1/1 F7B	5	1
01-42400	PIN F35B-/F7B/F70B	6	1
01-46798-2	WEAR PLATE F7B	7	1
01-45680	WASHER F5B/F6B/F7B	8	1
01-46924	SPACER F7B-9	9	1
0.0279.301	SCREW M5X8 ISO1207 A4	10	6
0.0279.033	SCREW M5X8 ISO1207 BRASS	11	1
0.2172.012	O-RING 63,22X1,78 NBR70	12	1
0.2230.015	V-RING 15.5-17.5 NBR/65SH	13	1
0.3431.742	BALL BEARING 6203 2 RS1 ST	14	2
0.2247.022	MECH.SEAL COMPL D16	15	1
0.0371.040	RETAIN. RING BORE D40 DIN472 SPRST	16	1
0.0370.017	EXT. CIRCLIP D17 DIN471 ST	17	1
0.0370.516	EXT. CIRCLIP D16 DIN471 PHB	18	1
01-46797	LABEL	19	1

The product, i.e. concept, design and construction, is the property of SPX Johnson Pump Marine AB

10-24667 pump F7B-9

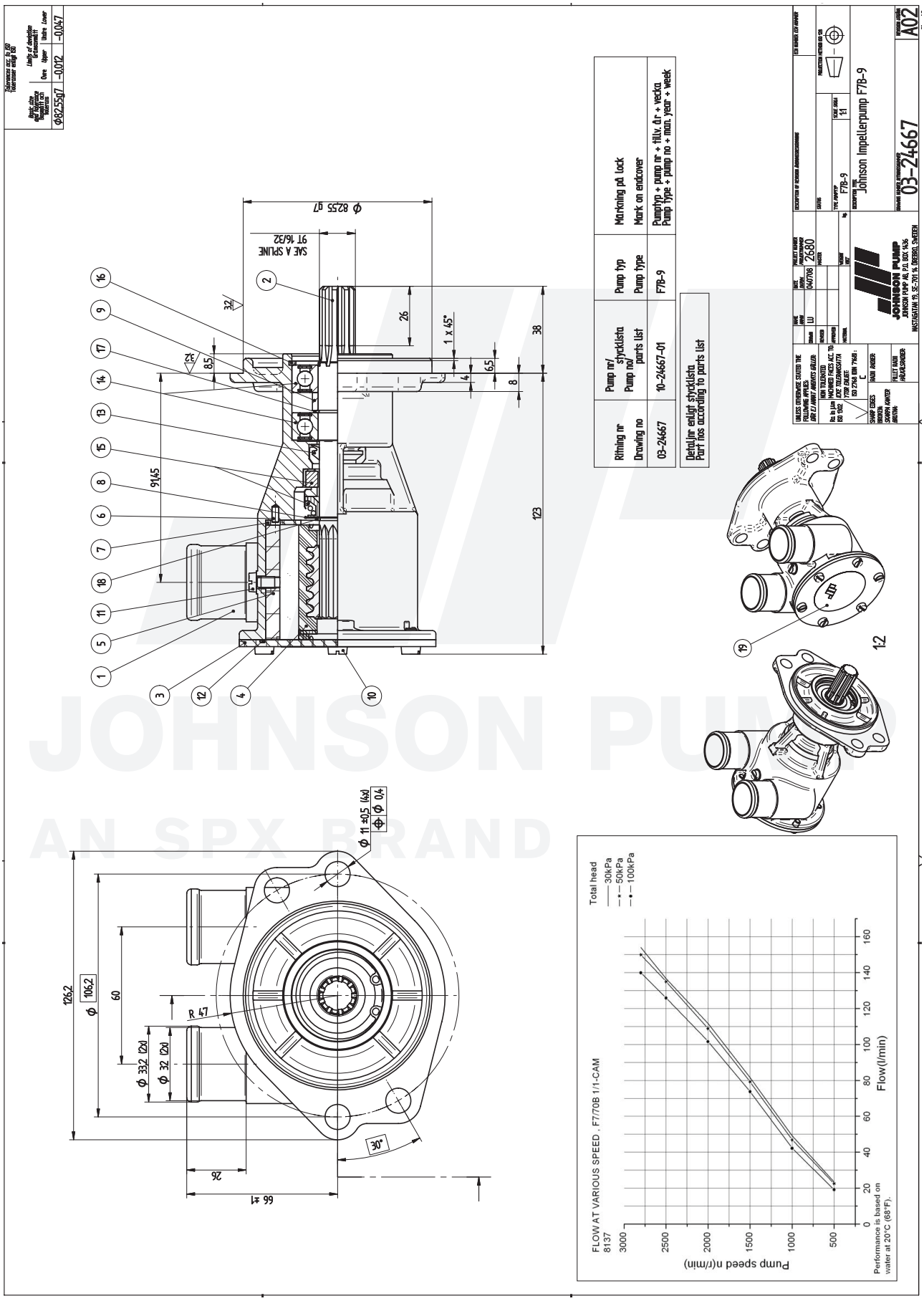

F7B-9 Impeller pump

Art. No. 10-24753-01

Part. No.	Description GB	Position	Quantity
01-13367-1	PUMP BODY F7B-9 JOHN DEERE	1	1
01-36141	SHAFT F7B-9 JOHN DEERE	2	1
01-46648-3	ENDCOVER F7B	3	1
08-1028B	IMPELLER	4	1
01-46899	CAM 1/1 F7B	5	1
01-42400	PIN F35B-/F7B/F70B	6	1
01-46798-2	WEAR PLATE F7B	7	1
01-45680	WASHER F5B/F6B/F7B	8	1
0.2233.403	LIP SEAL 17X40X7 NBR	9	1
0.0279.301	SCREW M5X8 ISO1207 A4	10	6
0.0279.033	SCREW M5X8 ISO1207 BRASS	11	1
0.2172.012	O-RING 63,22X1,78 NBR70	12	1
0.2230.015	V-RING 15.5-17.5 NBR/65SH	13	1
0.3431.742	BALL BEARING 6203 2 RS1 ST	14	2
0.2247.022	MECH.SEAL COMPL D16	15	1
0.0371.040	RETAIN. RING BORE D40 DIN472 SPRST	16	1
0.0370.017	EXT. CIRCLIP D17 DIN471 ST	17	2
0.0370.516	EXT. CIRCLIP D16 DIN471 PHB	18	1
01-46797	LABEL	19	1

The product, i.e. concept, design and construction, is the property of SPX Johnson Pump Marine AB

10-24753 pump F7B-9

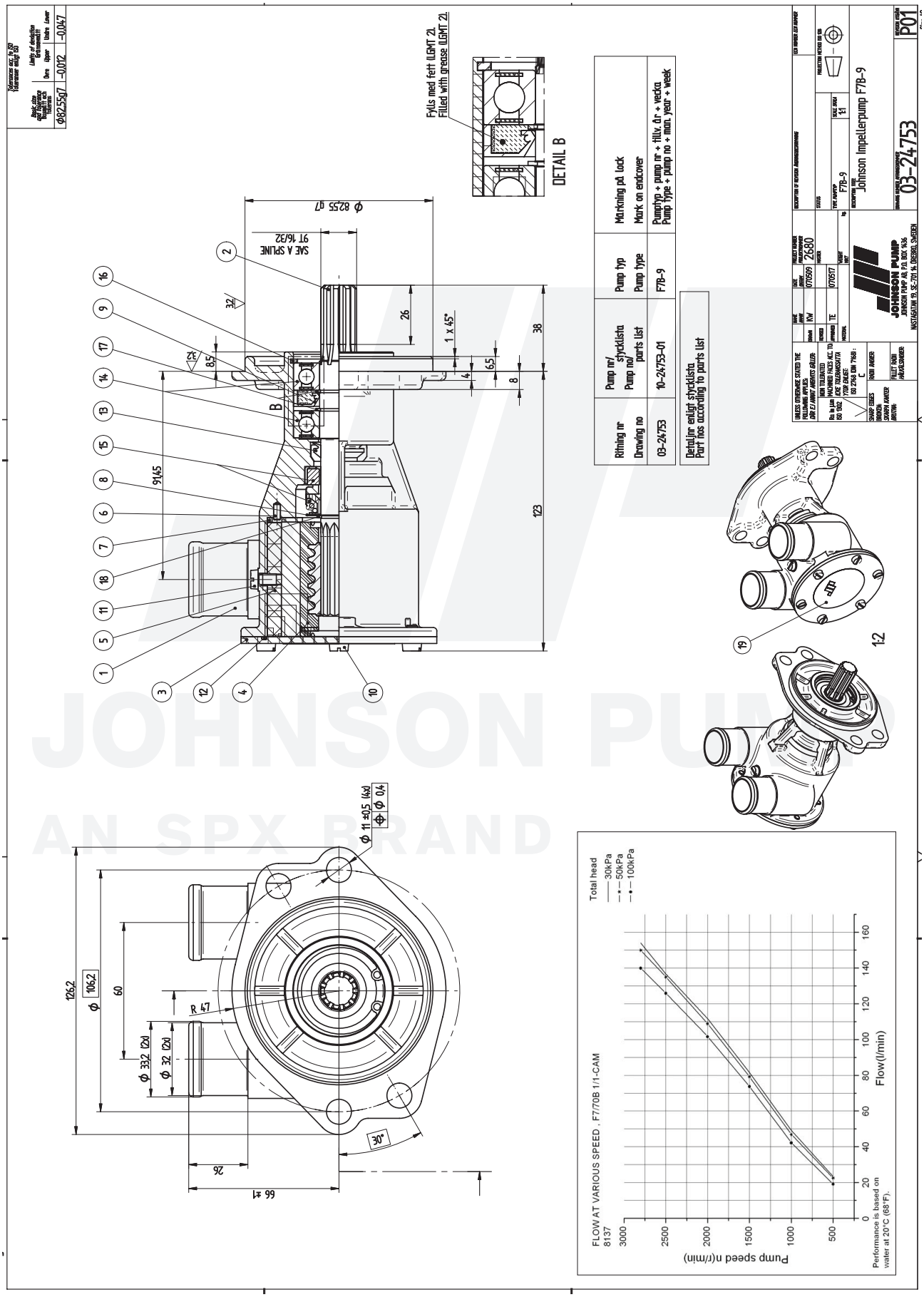

JOHNSON PUMP
AN SPX BRAND

F75B-9 MAN Impeller pump
Art. No. 10-13141-01

Part. No.	Description GB	Position	Quantity
01-13123-1	BODY F75B-9	1	1
01-46146	CAM 1/1 F75B	2	1
08-821B	IMPELLER F75B	3	1
01-35703	SHAFT F75B-9	4	1
01-46285	ENDCOVER F75B-9	5	1
01-46286	GASKET F75B	6	1
01-42443	WEARPLATE F7B/F70B	7	1
01-42400	PIN F35B-/F7B/F70B	8	1
01-24439-1	BEARING HOUSING F75B/F7B-9	9	1
01-46284-2	SPACER F75B-9	10	1
01-42427-15	SLINGER F8/F9B-	11	1
0.0370.525	EXT. CIRCLIP D25 DIN471 ST	12	2
0.0371.062	RETAIN. RING BORE D62 DIN472 SPRST	13	1
01-46790-02	WASHER D8.2XD14X1 CU	14	1
0.2247.008	MECH.SEAL COMPL FA25.47.14	15	1
0.2233.351	LIP SEAL 25X47X10/7	16	1
0.3431.001	BALL BEARING 6205 2 RS C3 ST	17	1
0.3431.044	BALL BEARING 6305 2RS C3 ST	18	1
0.0141.502	SCREW M5X8 DIN933SLOTTED BRASS	19	6
01-46794-12	SCREW M8X12 AL.BRONZE	20	1
0.0141.918	TAP BOLT M8X25 DIN933 8.8ZP	21	4
0.0353.309	SPRINGWASH D8.2 DIN127 STZN	22	4
01-46291	GASKET F75B-9	0	1
0.3444.004	CARTON NO 4 290X195X180	0	1

The product, i.e. concept, design and construction, is the property of SPX Johnson Pump Marine AB

10-13141 pump F75B-9

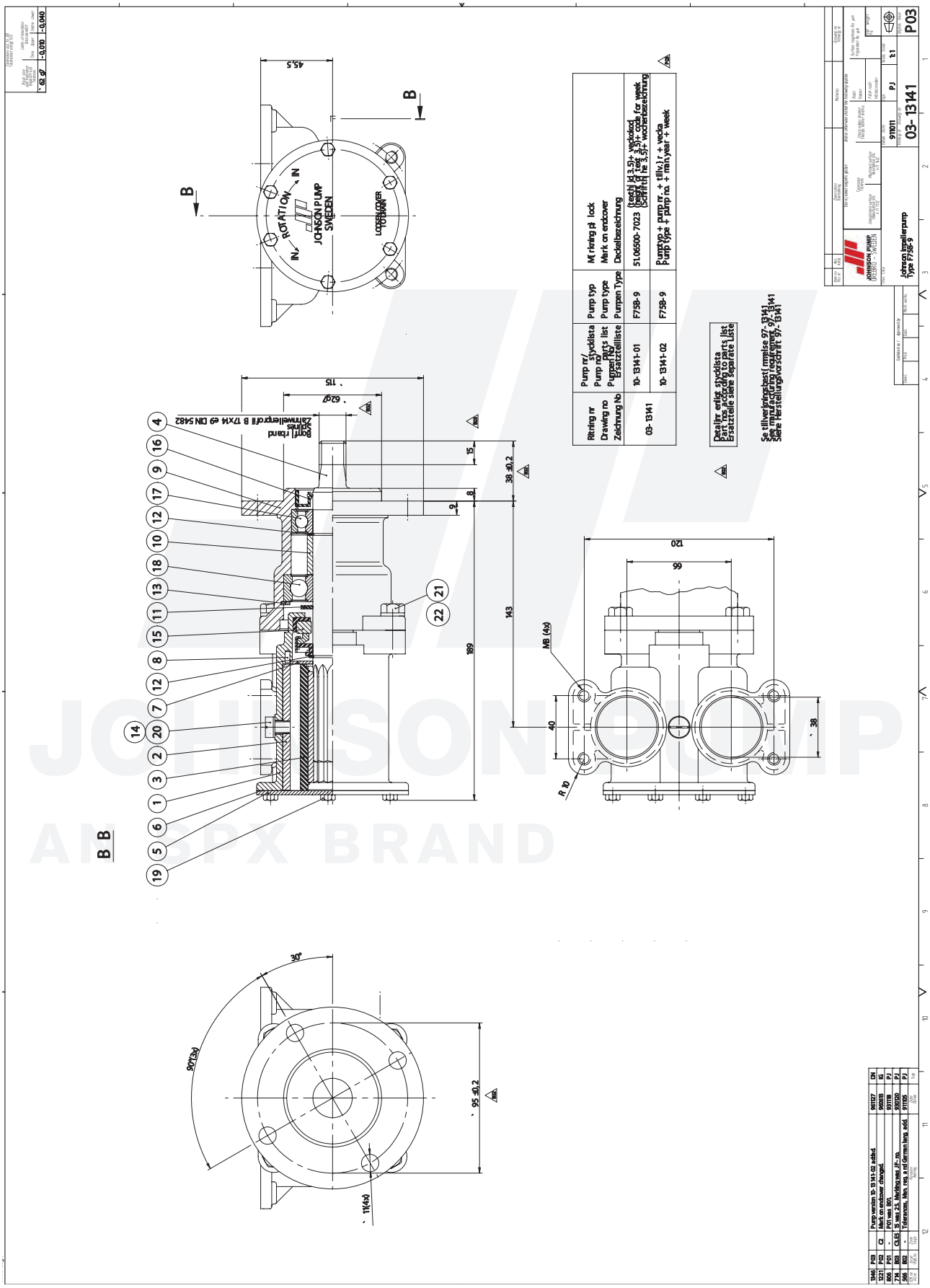

F75B-9 Impeller pump
Art. No. 10-13153-01

Service Kit No. 09-46691

Part no.	Description GB	Position	Quantity
01-13160-1	BODY F75B-9	1	1
01-35728	SHAFT F75B-9	2	1
01-46146	CAM 1/1 F75B	3	1
01-42443	WEARPLATE F7B/F70B	4	1
01-42400	PIN F35B-/F7B/F70B	5	1
01-46456	ENDCOVER F75B-9 VP	6	1
01-46286	GASKET F75B	7	1
01-46454	COLLAR	8	1
01-46455	RETAINING RING	9	1
0.2172.573	O-RING 23.4X3.53 BS1806 NBR70	10	1
01-46790-02	WASHER D8.2XD14X1 CU	11	1
0.0141.502	SCREW M5X8 DIN933SLOTTED BRASS	12	6
01-46794-12	SCREW M8X12 AL.BRONZE	13	1
0.3431.665	ANGULAR CONTACT BEARING 3205ATN9	14	1
0.2247.008	MECH.SEAL COMPL FA25.47.14	15	1
0.2233.008	OIL SEAL 25X40X7 BAUSL NBR	16	1
0.0370.525	EXT. CIRCLIP D25 DIN471 ST	17	3
0.0371.052	RETAIN. RING BORE D52 DIN472 SPRST	18	1
08-821B	IMPELLER F75B	19	1

The product, i.e. concept, design and construction, is the property of SPX Johnson Pump Marine AB

10-13153 pump F75B-9

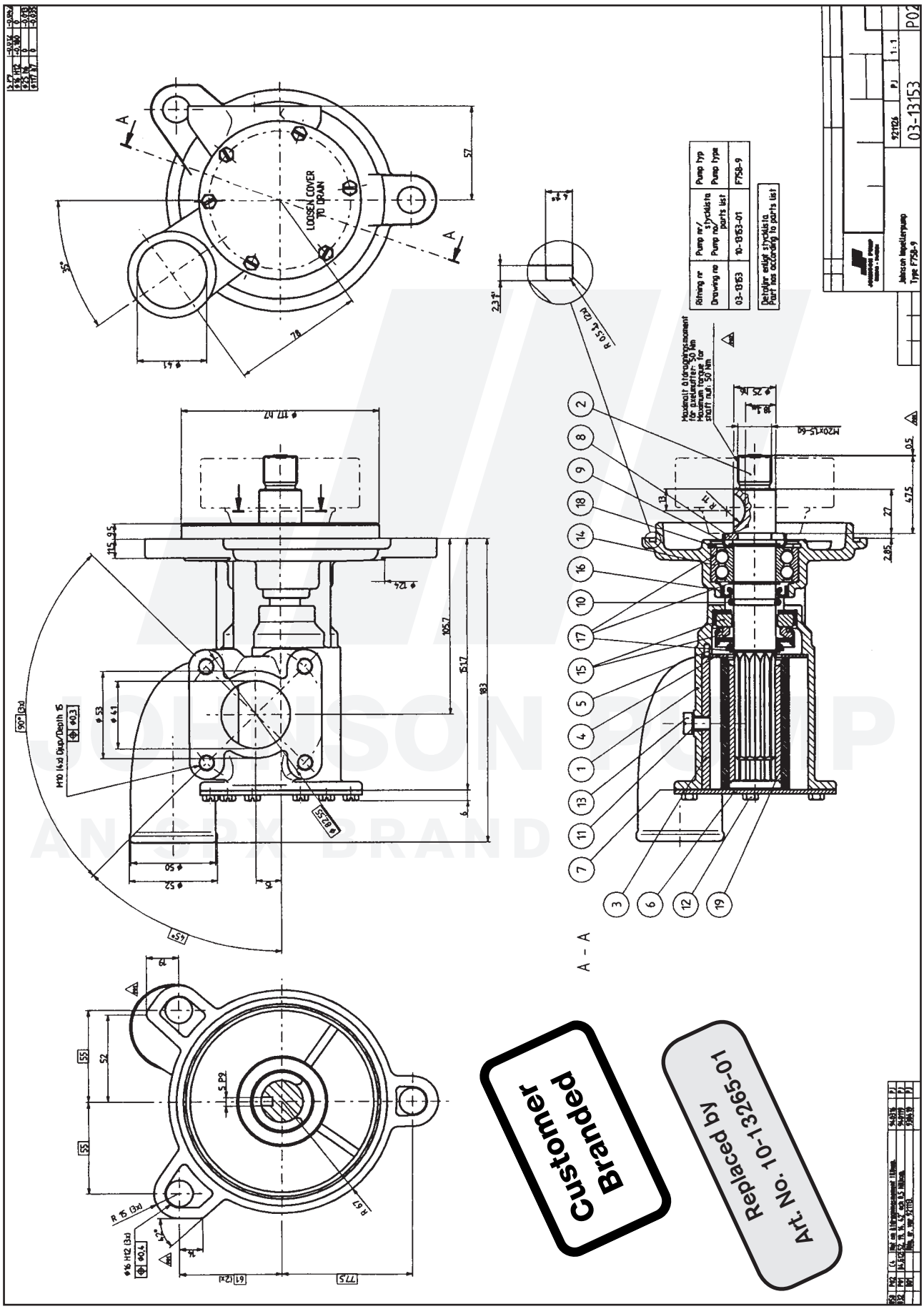

JOHNSON PUMP AN SPX BRAND

F75B-9 Impeller pump
Art. No. 10-13170-01

Manufacturing requirement no. 97-13170

Part no.	Description GB	Position	Quantity
01-13172-1	BODY F75B-9	1	1
01-35771	SHAFT F75B-9	2	1
01-46146	CAM 1/1 F75B	3	1
01-42443	WEARPLATE F7B/F70B	4	1
01-42400	PIN F35B-/F7B/F70B	5	1
01-46284-1	SPACER F75B-9	6	1
01-46285	ENDCOVER F75B-9	7	1
01-46790-02	WASHER D8.2XD14X1 CU	8	1
0.0141.502	SCREW M5X8 DIN933SLOTTED BRASS	9	6
01-46794-12	SCREW M8X12 AL.BRONZE	10	1
0.2172.573	O-RING 23.4X3.53 BS1806 NBR70	11	1
0.2173.493	O-RING 64.6X2.4 SS1586 NBR70	12	1
0.3431.485	BALL BEARING 6205 ST	13	2
0.2247.008	MECH.SEAL COMPL FA25.47.14	14	1
0.2233.008	OIL SEAL 25X40X7 BAUSL NBR	15	1
0.0371.052	RETAIN. RING BORE D52 DIN472 SPRST	16	1
0.0370.525	EXT. CIRCLIP D25 DIN471 ST	17	2
08-821B	IMPELLER F75B	18	1
0.0633.715	PLUG TYPE 254 D36.4MM CERBO	0	1
0.0633.711	PLUG TYPE 252-2 D32.8MM CERBO	0	1
0.3444.022	PLASTIC BAG 250X325X0,04	0	1

The product, i.e. concept, design and construction, is the property of SPX Johnson Pump Marine AB

10-13170 pump F75B-9

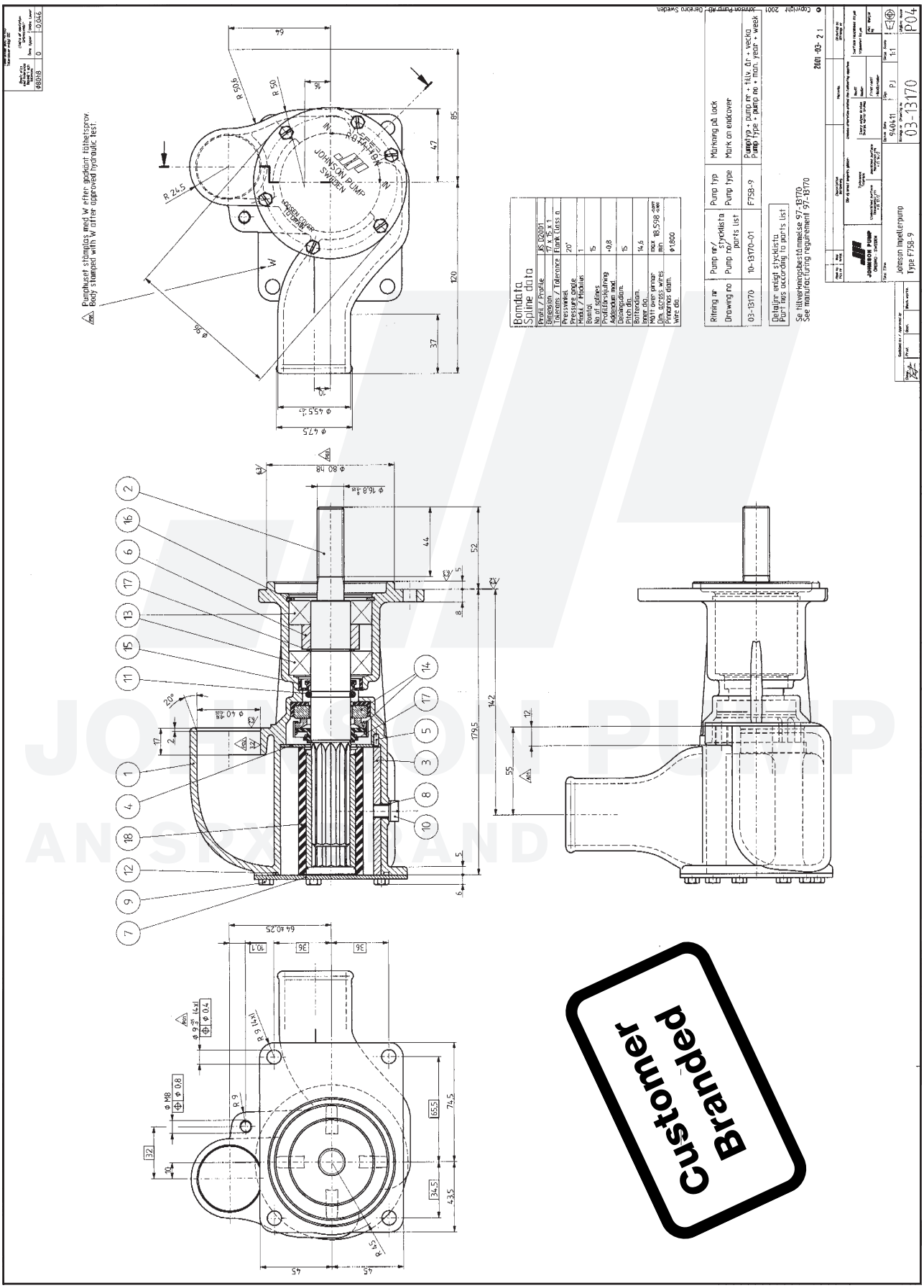

F75B-9 Impeller pump
Art. No. 10-13265-01

Part no.	Description GB	Position	Quantity
01-13264-1	PUMP HOUSING F75B-9 (VP)	1	1
01-35911	SHAFT F75B-9	2	1
01-46146	CAM 1/1 F75B	3	1
01-42443	WEARPLATE F7B/F70B	4	1
01-42400	PIN F35B-/F7B/F70B	5	1
01-46456	ENDCOVER F75B-9 VP	6	1
01-46286	GASKET F75B	7	1
01-46832	SPACER	8	1
0.0503.027	WOODRUFFKEY 3X4.8X13 ST	9	1
0.2172.573	O-RING 23.4X3.53 BS1806 NBR70	10	1
01-46790-02	WASHER D8.2XD14X1 CU	11	1
0.0141.502	SCREW M5X8 DIN933SLOTTED BRASS	12	6
01-46794-12	SCREW M8X12 AL.BRONZE	13	1
0.3431.030	BALL BEARING 6304/C3	14	2
0.2247.008	MECH.SEAL COMPL FA25.47.14	15	1
0.2233.008	OIL SEAL 25X40X7 BAUSL NBR	16	1
0.0370.525	EXT. CIRCLIP D25 DIN471 ST	17	1
0.0371.052	RETAIN. RING BORE D52 DIN472 SPRST	18	1
08-821B	IMPELLER F75B	19	1

The product, i.e. concept, design and construction, is the property of SPX Johnson Pump Marine AB

10-13265 pump F75B-9

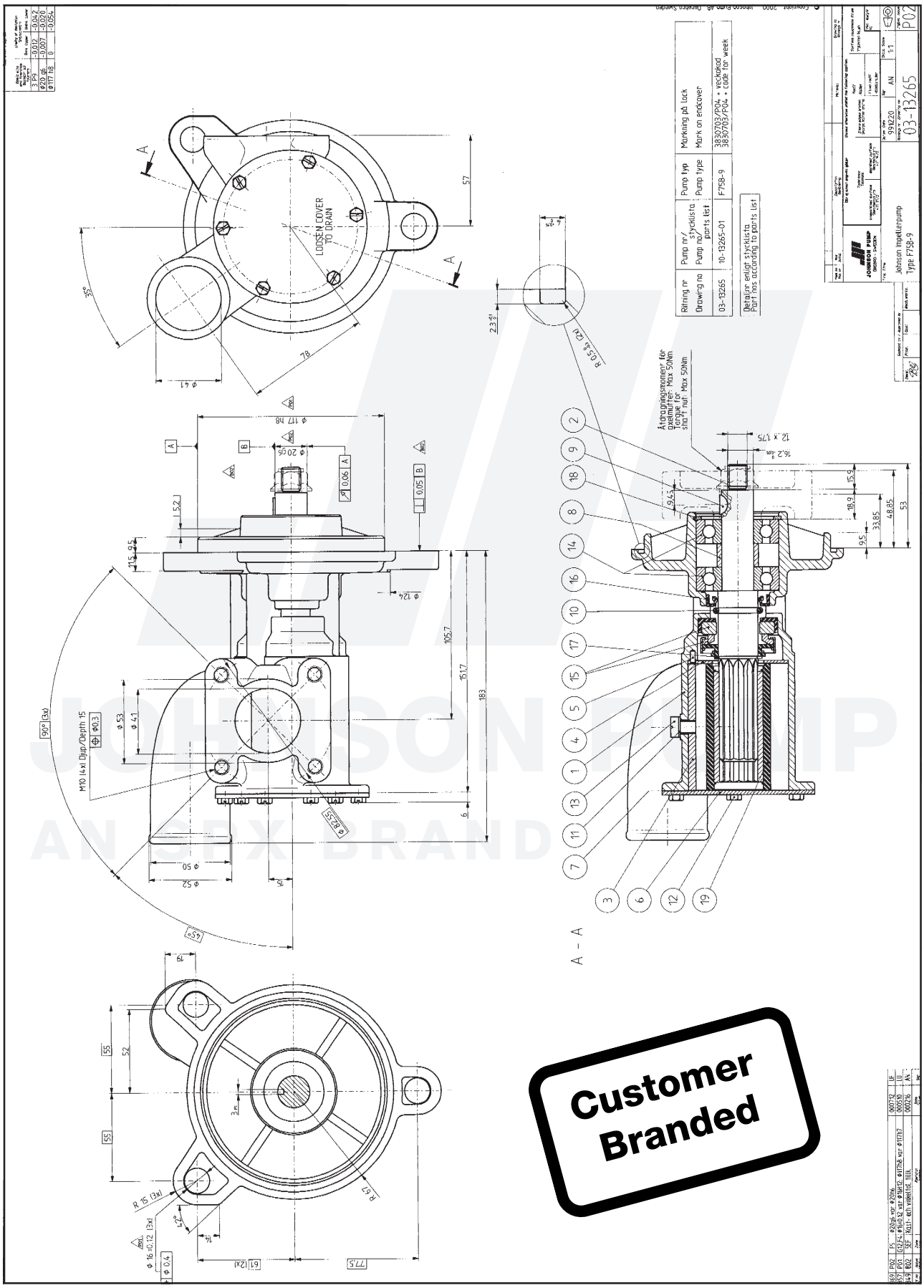

JOHNSON PUMP
AN SPX BRAND

F75B-9 Impeller pump
Art. No. 10-13286-01

Part no.	Description GB	Position	Quantity
01-13326	PUMP BODY F75B-9 YANMAR	1	1
01-24636	ENDCOVER F75B-9 YANMAR	2	1
01-35999	CONNECTION F75B YANMAR	3	1
01-35998	SHAFT F75B-9	4	1
01-46146	CAM 1/1 F75B	5	1
08-821BT	IMPELLER F75B W. THREAD	6	1
01-42443	WEARPLATE F7B/F70B	7	1
01-42400	PIN F35B-/F7B/F70B	8	1
0.2247.008	MECH.SEAL COMPL FA25.47.14	9	1
0.2172.573	O-RING 23.4X3.53 BS1806 NBR70	10	1
0.2233.008	OIL SEAL 25X40X7 BAUSL NBR	11	1
0.3431.485	BALL BEARING 6205 ST	12	2
0.0370.525	EXT. CIRCLIP D25 DIN471 ST	13	2
0.0371.052	RETAIN. RING BORE D52 DIN472 SPRST	14	1
01-46284-1	SPACER F75B-9	15	1
0.2172.996	O-RING 87x2 NBR70	16	1
0.2172.998	O-RING 68x2 NBR70	17	1
0.0141.503	SCREW M5X12 ISO4017 (A4)	18	6
0.0252.134	ALLEN SCREW M6X12 M DIN912(A4)	19	4
01-46790-02	WASHER D8.2XD14X1 CU	20	1
01-46794-12	SCREW M8X12 AL.BRONZE	21	1
0.0633.709	PLUG TYPE 410073 D44.5MM DBI	0	2

The product, i.e. concept, design and construction, is the property of SPX Johnson Pump Marine AB

10-13286 pump F75B-9

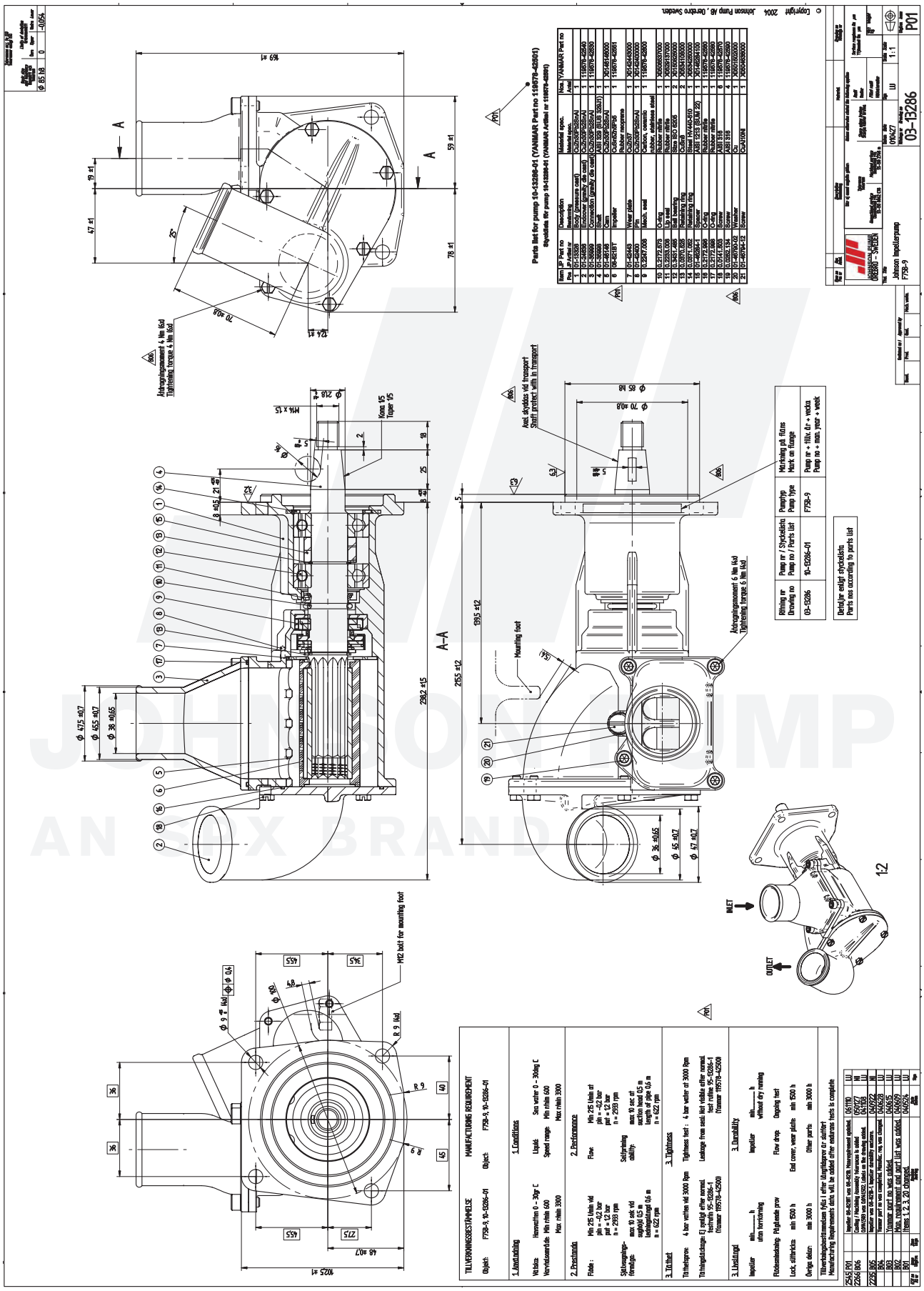
Parts list for pump 10-13286-01 (YANMAR Part no 119570-42500)
Styckelista för pump 10-13286-01 (YANMAR Artikel nr 119570-42500)
Item nr Part no Description Material spec. Nos. (YANMAR Part no)
Antal
1 01-3308 Body (pressure cast) Cu3Sn3P5Zn5Ni4 1 119570-42540
2 01-3309 Cover (pressure cast) Cu3Sn3P5Zn5Ni4 1 119570-42560
3 01-3969 Connection (gravity die cast) Cu3Sn3P5Zn5Ni4 1 119570-42580
4 01-3968 Shaft AISI 329 (SUS 329J1) 1 X014614000
5 01-2148 Cam Cu3Sn3P5Zn5Ni4 1 X014614000
6 01-2149 Impeller Cu3Sn3P5Zn5Ni4 1 119570-42601
7 01-6449 Wear plate Rubber neoprene 1 X014646000
8 01-2450 Pin Cu3Sn37 1 X014400000
9 02-2411.008 Washer, steel Cu3Sn3P5Zn5Ni4 1 119570-42600
10 02.2172.575 O-ring Rubber nitrile 1 X005857000
11 02.2238.008 Lip seal Rubber nitrile 1 X005917000
12 01.0.0.0.0 Ball bearing Fitting SKF 6008 2 X005410000
13 02.0701.025 Retaining ring Circlip 2 X005410000
14 02.0.01.002 Retaining ring Steel HV440-510 1 X005450000
15 01-4.2.6.4-1 Spacer AISI 1215 (SUM 23) 1 X014656100
16 02-2172.325 O-ring Rubber nitrile 1 X005857000
17 02.2172.325 O-ring Rubber nitrile 1 119570-42580
18 02.0141.003 Screw AISI 316 1 119570-42570
19 02.0.0.0.1.3.4 Screw AISI 316 4 119570-42590
20 01-4.0.1.4-2.2 Washer Cu 1 X005450000
21 01-4.0.1.4-1.2 Screw DIN7984 1 X005450000
Material specification
Material specification
Material specification

F75B-9 Impeller pump
Art. No. 10-13306-01

Part no.	Description GB	Position	Quantity
01-13264-1	PUMP HOUSING F75B-9 (VP)	1	1
01-35911	SHAFT F75B-9	2	1
01-46146	CAM 1/1 F75B	3	1
01-42443	WEARPLATE F7B/F70B	4	1
01-42400	PIN F35B-/F7B/F70B	5	1
01-46456	ENDCOVER F75B-9 VP	6	1
01-46286	GASKET F75B	7	1
01-46832	SPACER	8	1
0.0503.027	WOODRUFFKEY 3X4.8X13 ST	9	1
0.2172.573	O-RING 23.4X3.53 BS1806 NBR70	10	1
01-46790-02	WASHER D8.2XD14X1 CU	11	1
0.0141.502	SCREW M5X8 DIN933SLOTTED BRASS	12	6
01-46794-12	SCREW M8X12 AL.BRONZE	13	1
0.3431.030	BALL BEARING 6304/C3	14	2
0.2247.008	MECH.SEAL COMPL FA25.47.14	15	1
0.2233.008	OIL SEAL 25X40X7 BAUSL NBR	16	1
0.0370.525	EXT. CIRCLIP D25 DIN471 ST	17	1
0.0371.052	RETAIN. RING BORE D52 DIN472 SPRST	18	1
08-821BT	IMPELLER F75B W. THREAD	19	1
07-3830720	GEAR	20	1
07-971099	FLANGE LOCK NUT M12, STEEL ISO 7044	21	1

The product, i.e. concept, design and construction, is the property of SPX Johnson Pump Marine AB

10-13306 pump F75B-9

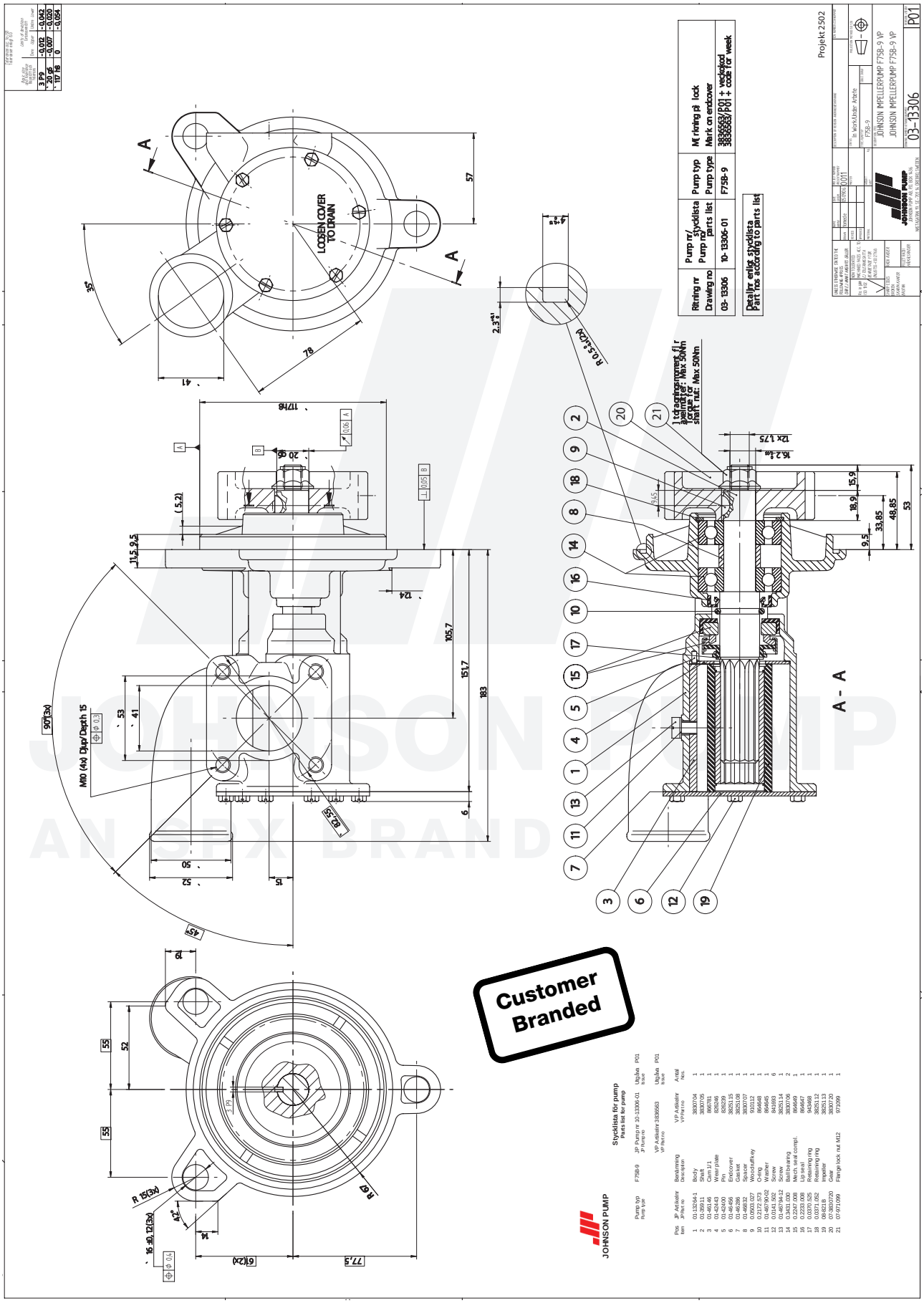

JOHNSON PUMP
AN SPX BRAND

F75B-9 Impeller pump
Art. No. 10-24413-01

Part. No.	Description GB	Position	Quantity
01-13123-1	BODY F75B-9	1	1
01-46146	CAM 1/1 F75B	2	1
08-821B	IMPELLER F75B	3	1
01-35685	SHAFT F75B-9	4	1
01-46285	ENDCOVER F75B-9	5	1
01-46286	GASKET F75B	6	1
01-42443	WEARPLATE F7B/F70B	7	1
01-42400	PIN F35B-/F7B/F70B	8	1
01-24414-1	BEARING HOUSING F75B-9	9	1
01-46284-1	SPACER F75B-9	10	1
01-42427-15	SLINGER F8/F9B-	11	1
0.0370.525	EXT. CIRCLIP D25 DIN471 ST	12	2
0.0371.062	RETAIN. RING BORE D62 DIN472 SPRST	13	1
01-46790-02	WASHER D8.2XD14X1 CU	14	1
0.0503.032	WOODRUFKEY 5X6.5X16 DIN6888 ST	15	1
0.2247.008	MECH.SEAL COMPL FA25.47.14	16	1
0.2233.351	LIP SEAL 25X47X10/7	17	1
0.3431.001	BALL BEARING 6205 2 RS C3 ST	18	1
0.3431.044	BALL BEARING 6305 2RS C3 ST	19	1
0.0141.502	SCREW M5X8 DIN933SLOTTED BRASS	20	6
01-46794-12	SCREW M8X12 AL.BRONZE	21	1
0.0141.918	TAP BOLT M8X25 DIN933 8.8ZP	22	4
0.0353.309	SPRINGWASH D8.2 DIN127 STZN	23	4

The product, i.e. concept, design and construction, is the property of SPX Johnson Pump Marine AB

10-24413 pump F75B-9

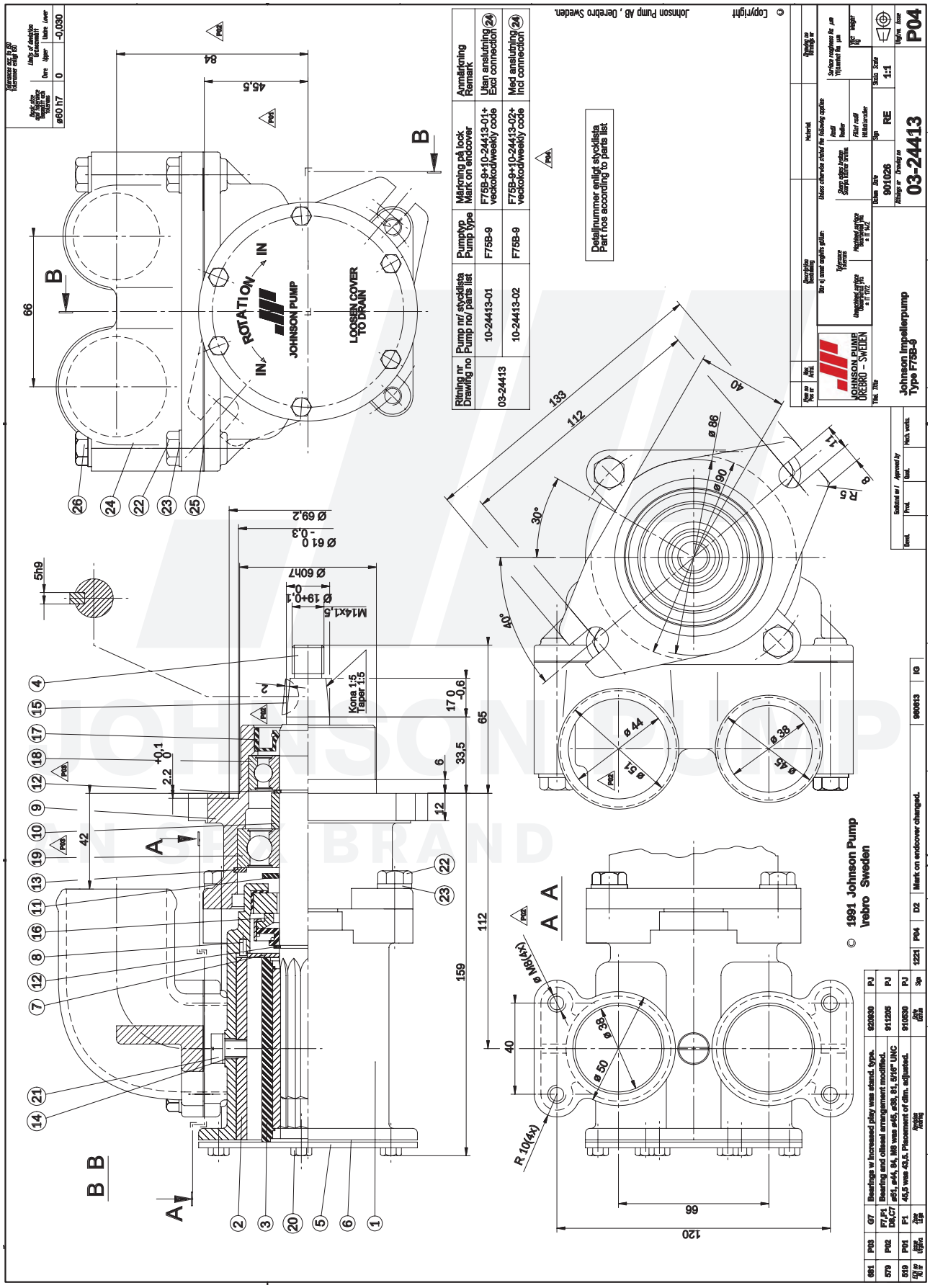

JOHNSON PUMP
THE SELF BRAND

10-13088 pump F8B-9

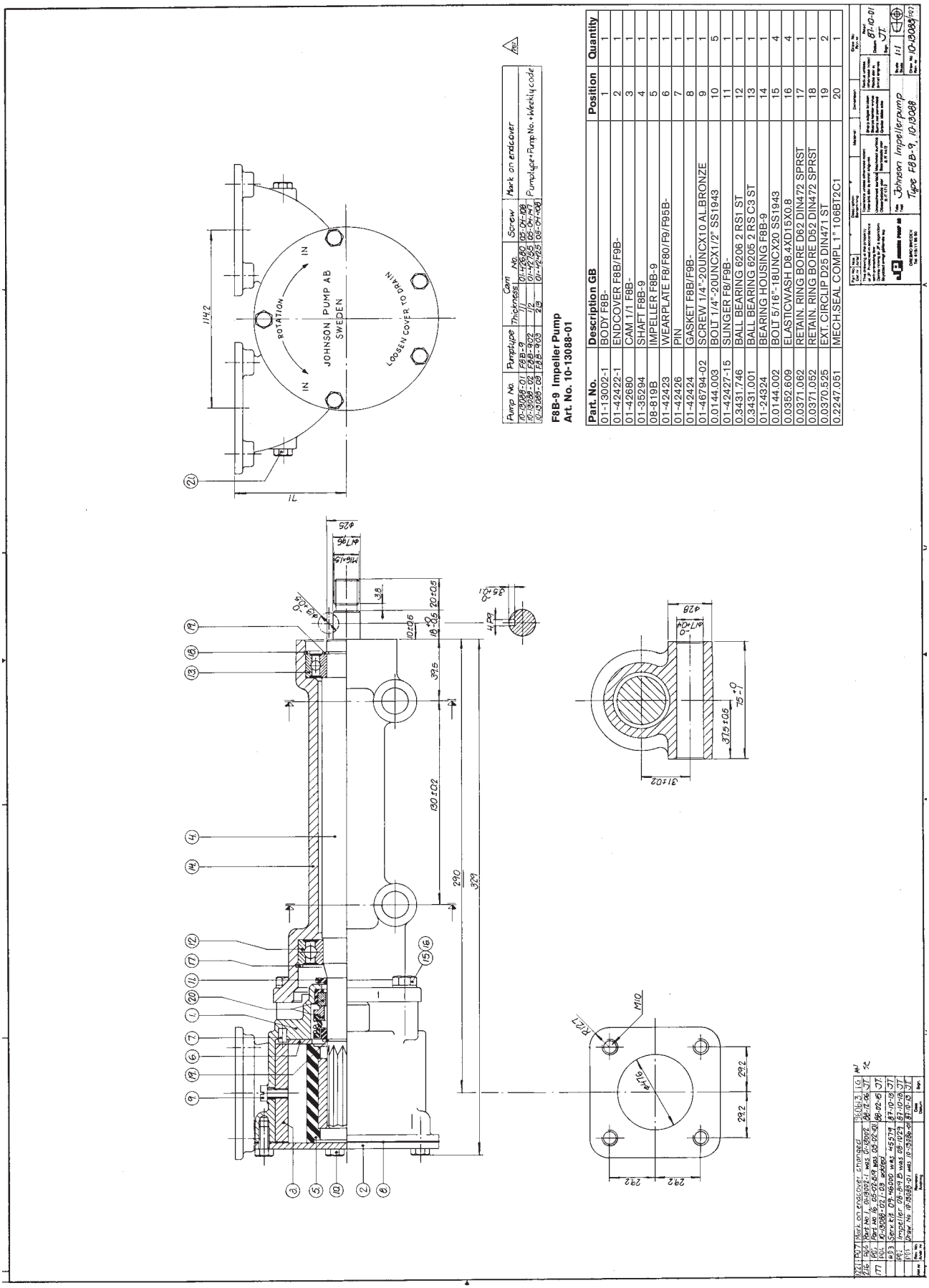

Pump No.	Pumptype	Thickness	Cam No.	Screw	Mark on endcover
10-13088-01	F8B-9	1/1	01-42680	05-04-08	Pumptype+Pump No.+Weekly code
10-13088-02	F8B-902	1/2	01-42755	05-04-147	
10-13088-03	F8B-903	2/3	01-42425	05-04-106	

F8B-9 Impeller Pump
Art. No. 10-13088-01

Part. No.	Description GB	Position	Quantity
01-13002-1	BODY F8B-	1	1
01-42422-1	ENDCOVER F8B/F9B-	2	1
01-42680	CAM 1/1 F8B-	3	1
01-35294	SHAFT F8B-9	4	1
08-819B	IMPELLER F8B-9	5	1
01-42423	WEARPLATE F8/F80/F9/F95B-	6	1
01-42426	PIN	7	1
01-42424	GASKET F8B/F9B-	8	1
01-46794-02	SCREW 1/4"-20UNCX10 AL.BRONZE	9	1
0.0144.003	BOLT 1/4"-20UNCX1/2" SS1943	10	5
01-42427-15	SLINGER F8/F9B-	11	1
0.3431.746	BALL BEARING 6206 2 RS1 ST	12	1
0.3431.001	BALL BEARING 6205 2 RS C3 ST	13	1
01-24324	BEARING HOUSING F8B-9	14	1
0.0144.002	BOLT 5/16"-18UNCX20 SS1943	15	4
0.0352.609	ELASTICWASH D8.4XD15X0.8	16	4
0.0371.062	RETAIN. RING BORE D62 DIN472 SPRST	17	1
0.0371.052	RETAIN. RING BORE D52 DIN472 SPRST	18	1
0.0370.525	EXT. CIRCLIP D25 DIN471 ST	19	2
0.2247.051	MECH.SEAL COMPL.1" 106BT2C1	20	1

The product, i.e. concept, design and construction, is the property of SPX Johnson Pump Marine AB

10-13096 pump F8B-9

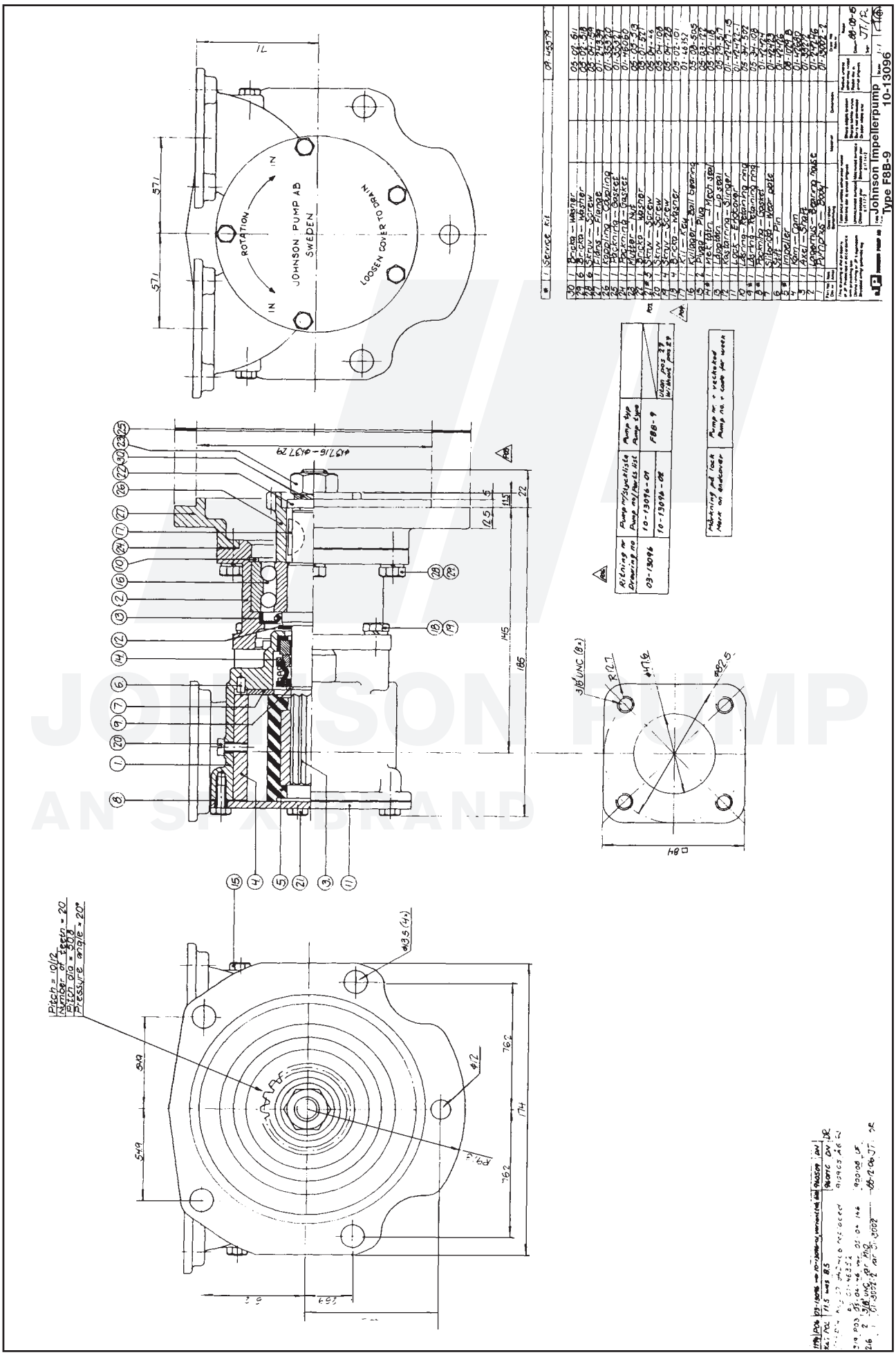

JOHNSON PUMP
AN SPX BRAND

F8B-9 Impeller pump
Art. No. 10-13180-01

Service Kit No. 09-46692

Part no.	Description GB	Position	Quantity
01-13182-1	BODY F8B-9 (VP)	1	1
01-35796	SHAFT F8B-9	2	1
01-42680	CAM 1/1 F8B-	3	1
01-42423	WEARPLATE F8/F80/F9/F95B-	4	1
01-42426	PIN	5	1
01-35163-3	ENDCOVER F8B-9 (VP)	6	1
0.2172.142	O-RING 90.00X2.5 NBR70	7	1
01-46454	COLLAR	8	1
01-46455	RETAINING RING	9	1
0.2172.573	O-RING 23.4X3.53 BS1806 NBR70	10	1
01-46284-3	SPACER F8B-9	11	1
0.0138.134	TAPBOLT M6X12 DIN933 A2	12	5
01-46794-02	SCREW 1/4”-20UNCX10 AL.BRONZE	13	1
0.3431.525	BALL BEARING 6305	14	2
0.2247.008	MECH.SEAL COMPL FA25.47.14	15	1
0.2234.010	LIP SEAL 25X40X7 DIN3760	16	1
0.0370.525	EXT. CIRCLIP D25 DIN471 ST	17	3
0.0371.062	RETAIN. RING BORE D62 DIN472 SPRST	18	1
08-819B	IMPELLER F8B-9	19	1

The product, i.e. concept, design and construction, is the property of SPX Johnson Pump Marine AB

10-13180 pump F8B-9

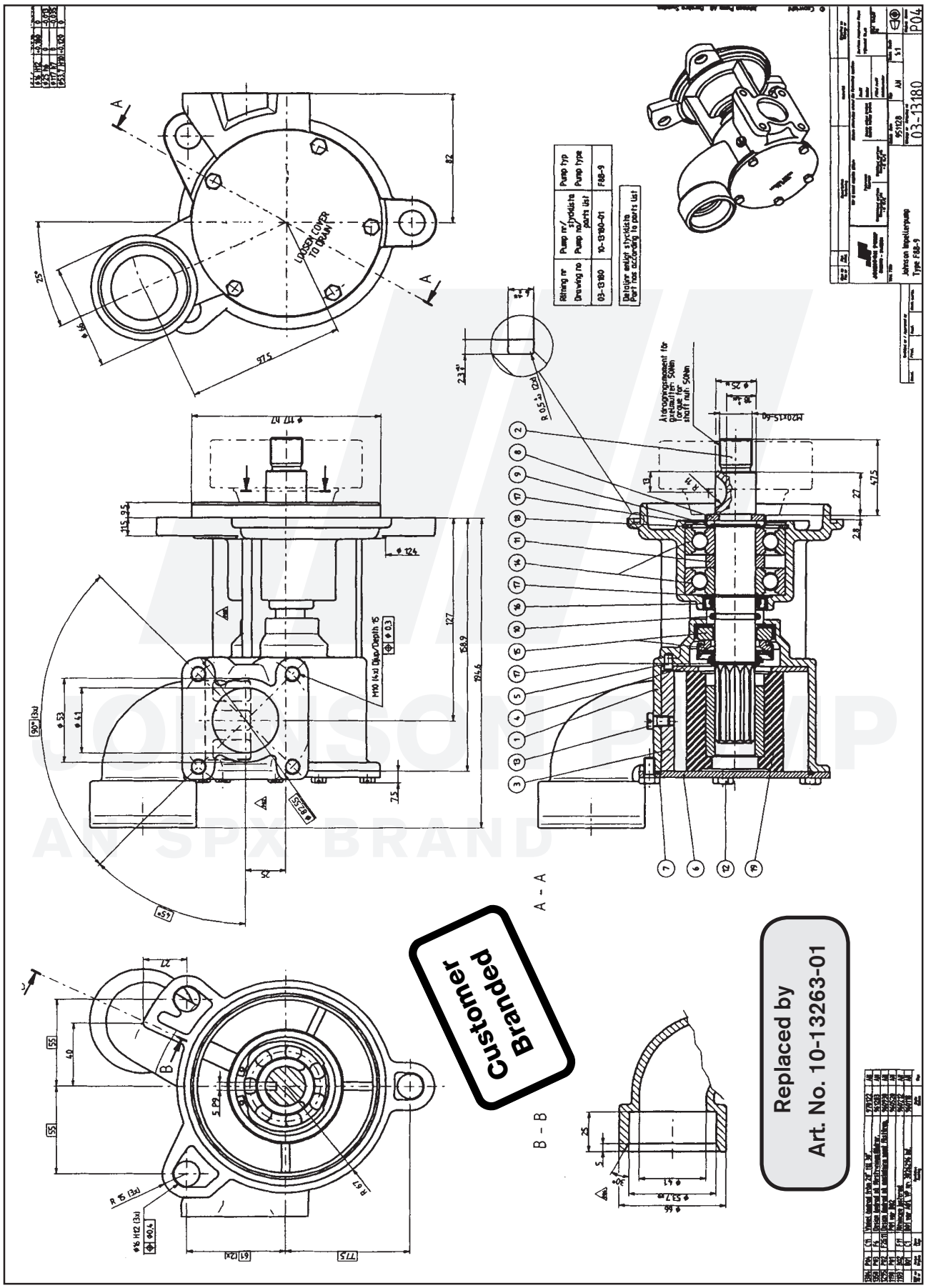

JOHNSON PUMP
AN SPX BRAND

F8B-9 Impeller pump
Art. No. 10-13234-01

Part no.	Description GB	Position	Quantity
01-11206	BODY F8B-	1	1
01-24246	BEARING HOUSING F7/F8/F9B-9	2	1
01-35868	SHAFT F8B-9	3	1
01-42680	CAM 1/1 F8B-	4	1
08-1029B	IMPELLER	5	1
01-42426	PIN	6	1
01-42423	WEARPLATE F8/F80/F9/F95B-	7	1
01-42424	GASKET F8B/F9B-	8	1
0.0370.525	EXT. CIRCLIP D25 DIN471 ST	9	1
0.0371.072	RETAIN. RING BORE D72 DIN472 SPRST	10	1
01-42422-1	ENDCOVER F8B/F9B-	11	1
01-42427-15	SLINGER F8/F9B-	12	1
0.2233.016	LIP SEAL 36X62X7 DPSM	13	1
0.2247.051	MECH.SEAL COMPL 1” 106BT2C1	14	1
0.2500.805	PLUG KR1/8” 6K 11X5 BRASS	15	2
0.3431.684	ANGULAR CONTACT BEARING 3306ATN9	16	1
01-46352	KEY	17	1
0.0353.309	SPRINGWASH D8.2 DIN127 STZN	18	4
0.0144.002	BOLT 5/16”-18UNCX20 SS1943	19	4
01-46794-02	SCREW 1/4”-20UNCX10 AL.BRONZE	20	1
0.0144.003	BOLT 1/4”-20UNCX1/2” SS1943	21	5

The product, i.e. concept, design and construction, is the property of SPX Johnson Pump Marine AB

10-13234 pump F8B-9

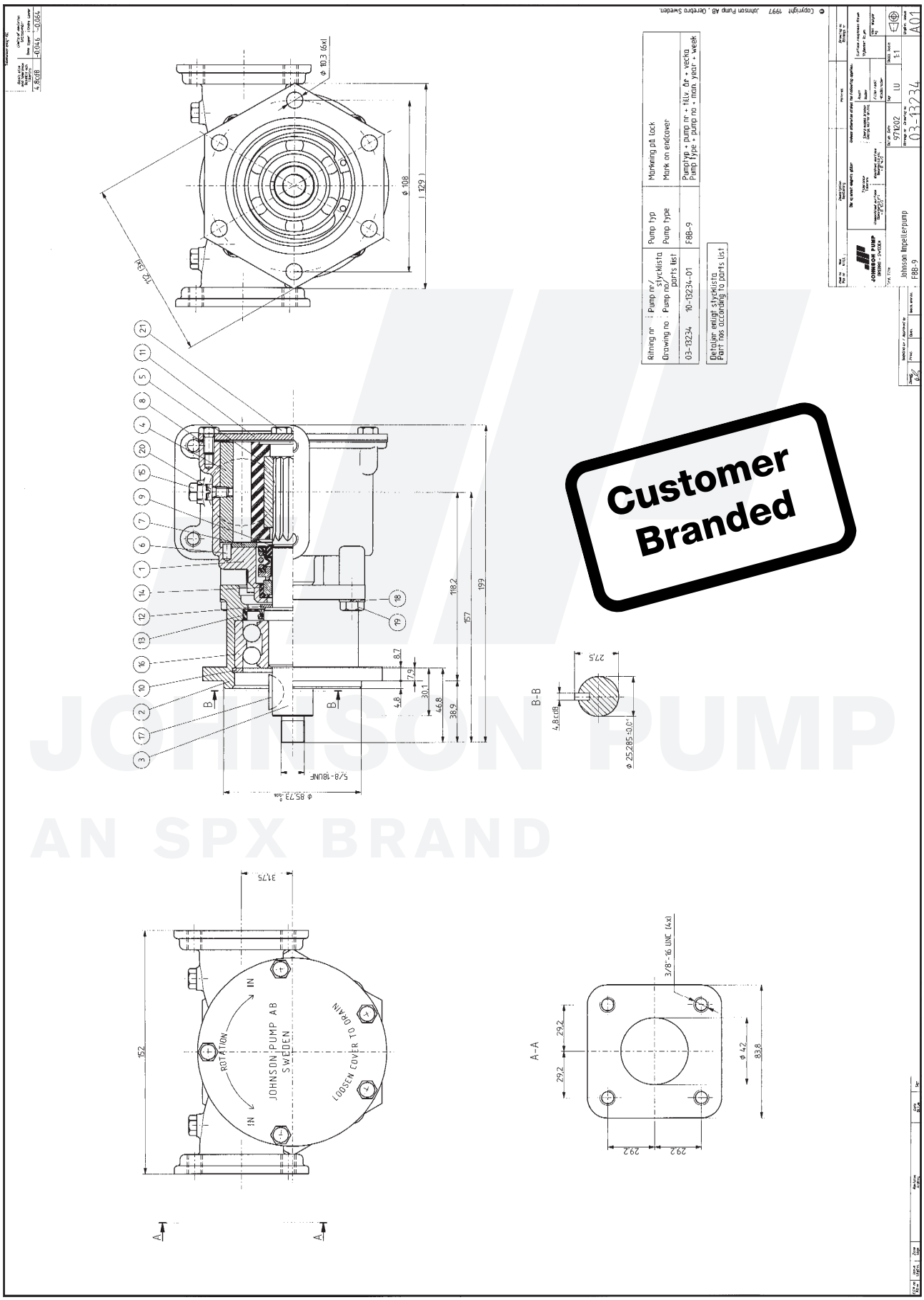

F8B-9 Impeller pump
Art. No. 10-13263-01

Part. No.	Description GB	Position	Quantity
01-13262-1	PUMP HOUSING F8B-9 (VP)	1	1
01-35910	SHAFT F8B-9	2	1
01-42680	CAM 1/1 F8B-	3	1
01-42423	WEARPLATE F8/F80/F9/F95B-	4	1
01-42426	PIN	5	1
01-35163-3	ENDCOVER F8B-9 (VP)	6	1
0.2172.142	O-RING 90.00X2.5 NBR70	7	1
0.0503.027	WOODRUFFKEY 3X4.8X13 ST	8	1
0.2172.573	O-RING 23.4X3.53 BS1806 NBR70	9	1
01-46284-4	SPACER F8B-9	10	1
0.0138.134	TAP BOLT M6X12 DIN933 A2	11	5
01-46794-02	SCREW 1/4”-20UNCX10 AL.BRONZE	12	1
0.3431.525	BALL BEARING 6305	13	2
0.2247.008	MECH.SEAL COMPL FA25.47.14	14	1
0.2234.010	LIP SEAL 25X40X7 DIN3760	15	1
0.0370.525	EXT. CIRCLIP D25 DIN471 ST	16	1
0.0371.062	RETAIN. RING BORE D62 DIN472 SPRST	17	1
08-819B	IMPELLER F8B-9	18	1
0.0370.025	EXT. CIRCLIP D25 DIN471 ST	19	2

The product, i.e. concept, design and construction, is the property of SPX Johnson Pump Marine AB

10-13263 pump F8B-9

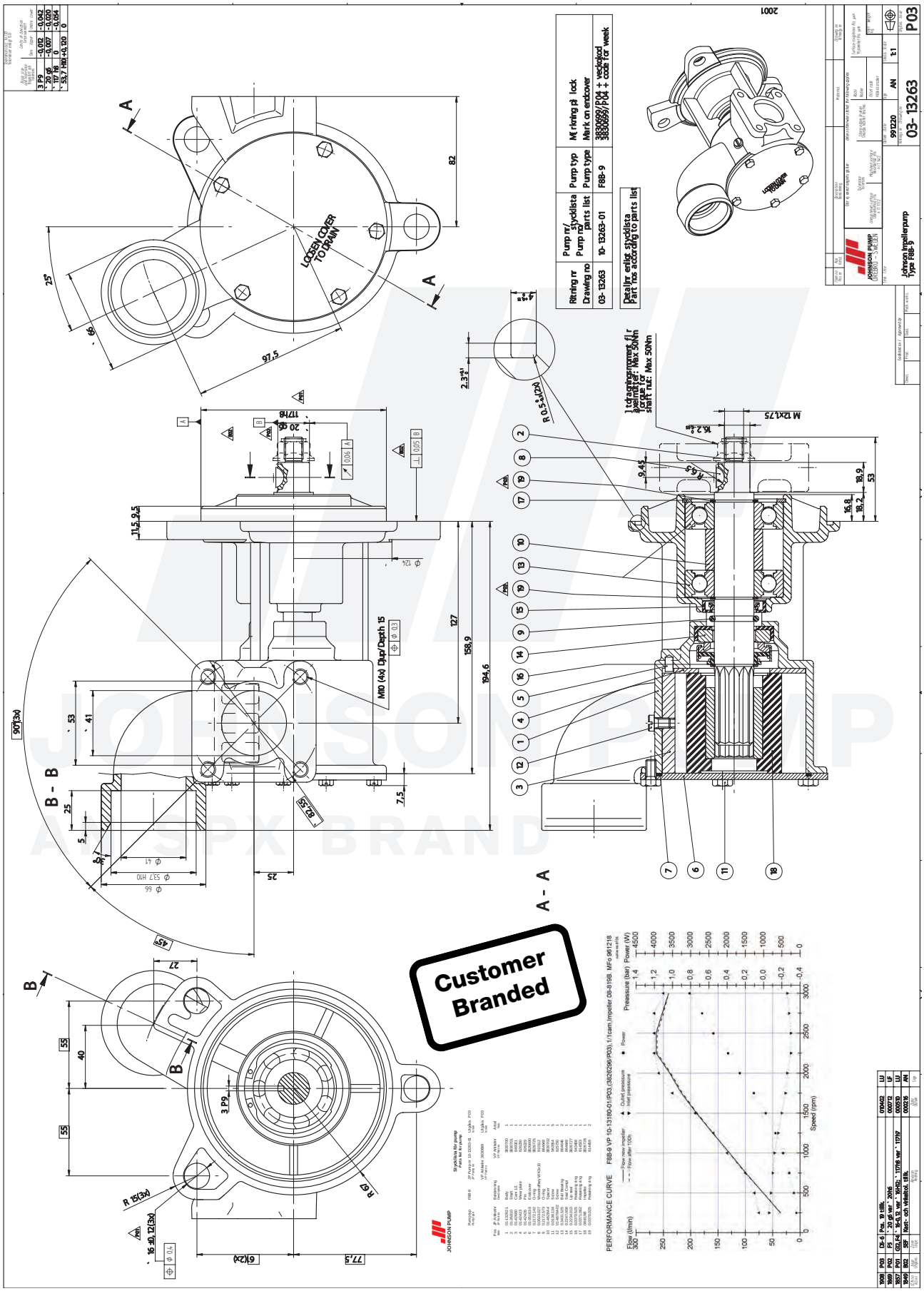

F8B-9 Impeller pump
Art. No. 10-13305-01

Part. No.	Description GB	Position	Quantity
01-13262-1	PUMP HOUSING F8B-9 (VP)	1	1
01-35910	SHAFT F8B-9	2	1
01-42680	CAM 1/1 F8B-	3	1
01-42423	WEARPLATE F8/F80/F9/F95B-	4	1
01-42426	PIN	5	1
01-35163-3	ENDCOVER F8B-9 (VP)	6	1
0.2172.142	O-RING 90.00X2.5 NBR70	7	1
0.0503.027	WOODRUFFKEY 3X4.8X13 ST	8	1
0.2172.573	O-RING 23.4X3.53 BS1806 NBR70	9	1
01-46284-4	SPACER F8B-9	10	1
0.0138.134	TAP BOLT M6X12 DIN933 A2	11	5
01-46794-02	SCREW 1/4”-20UNCX10 AL.BRONZE	12	1
0.3431.525	BALL BEARING 6305	13	2
0.2247.008	MECH.SEAL COMPL FA25.47.14	14	1
0.2234.010	LIP SEAL 25X40X7 DIN3760	15	1
0.0370.525	EXT. CIRCLIP D25 DIN471 ST	16	1
0.0371.062	RETAIN. RING BORE D62 DIN472 SPRST	17	1
08-819B	IMPELLER F8B-9	18	1
0.0370.025	EXT. CIRCLIP D25 DIN471 ST	19	2
07-3830720	GEAR	20	1
07-971099	FLANGE LOCK NUT M12, STEEL ISO 7044	21	1

The product, i.e. concept, design and construction, is the property of SPX Johnson Pump Marine AB

10-13305 pump F8B-9

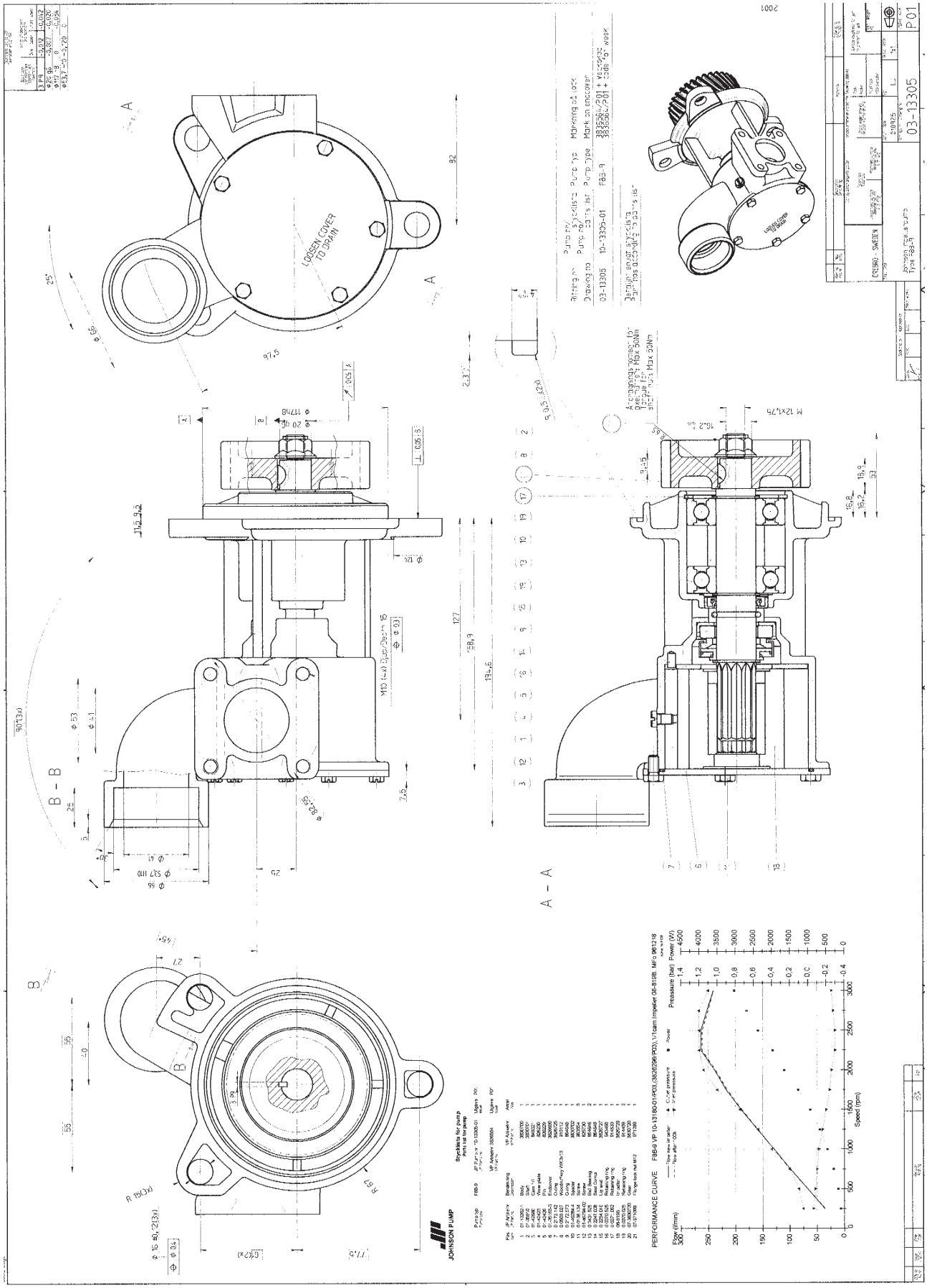

10-21915 pump F8B-903

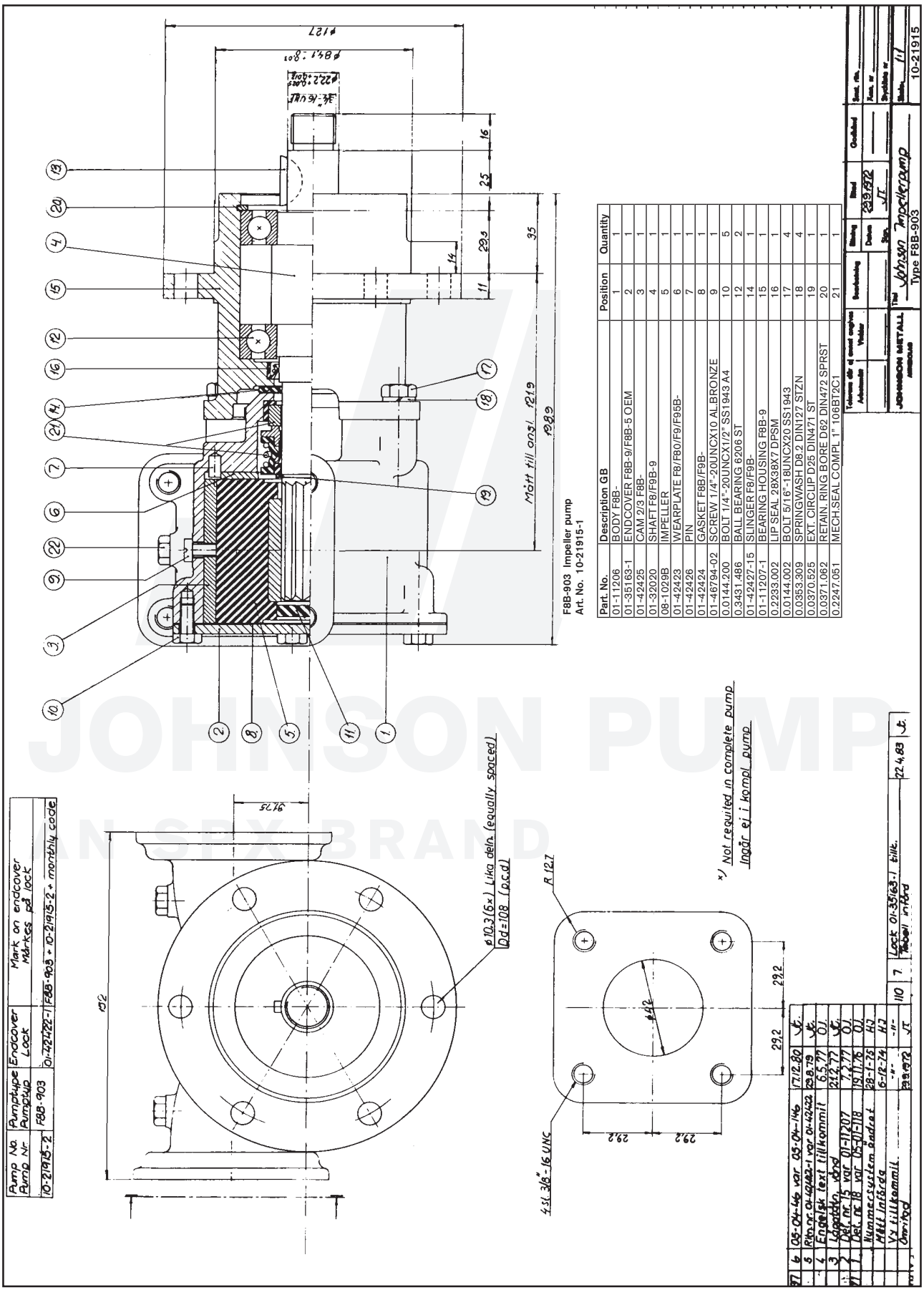

Part. No.	Description GB	Position	Quantity
01-11206	BODY F8B-	1	1
01-35163-1	ENDCOVER F8B-9/F8B-5 OEM	2	1
01-42425	CAM 2/3 F8B-	3	1
01-32020	SHAFT F8/F8B-9	4	1
08-1029B	IMPELLER	5	1
01-42423	WEARPLATE F8/F80/F9/F95B-	6	1
01-42426	PIN	7	1
01-42424	GASKET F8B/F9B-	8	1
01-46794-02	SCREW 1/4"-20UNCX10 AL BRONZE	9	1
0.0144.200	BOLT 1/4"-20UNCX1/2" SS1943 A4	10	5
0.3431.486	BALL BEARING 6206 ST	12	2
01-42427-15	SLINGER F8/F9B-	14	1
01-11207-1	BEARING HOUSING F8B-9	15	1
0.2233.002	LIP SEAL 28X38X7 DPSM	16	1
0.0144.002	BOLT 5/16"-18UNCX20 SS1943	17	4
0.0353.309	SPRINGWASH D8.2 DIN127 STZN	18	4
0.0370.525	EXT. CIRCLIP D25 DIN471 ST	19	1
0.0371.062	RETAIN. RING BORE D62 DIN472 SPRST	20	1
0.2247.051	MECH.SEAL COMPL 1" 106BT2C1	21	1

JOHNSON PUMP
AN SPX BRAND

The product, i.e. concept, design and construction, is the property of SPX Johnson Pump Marine AB

10-22096 pump F8B-9

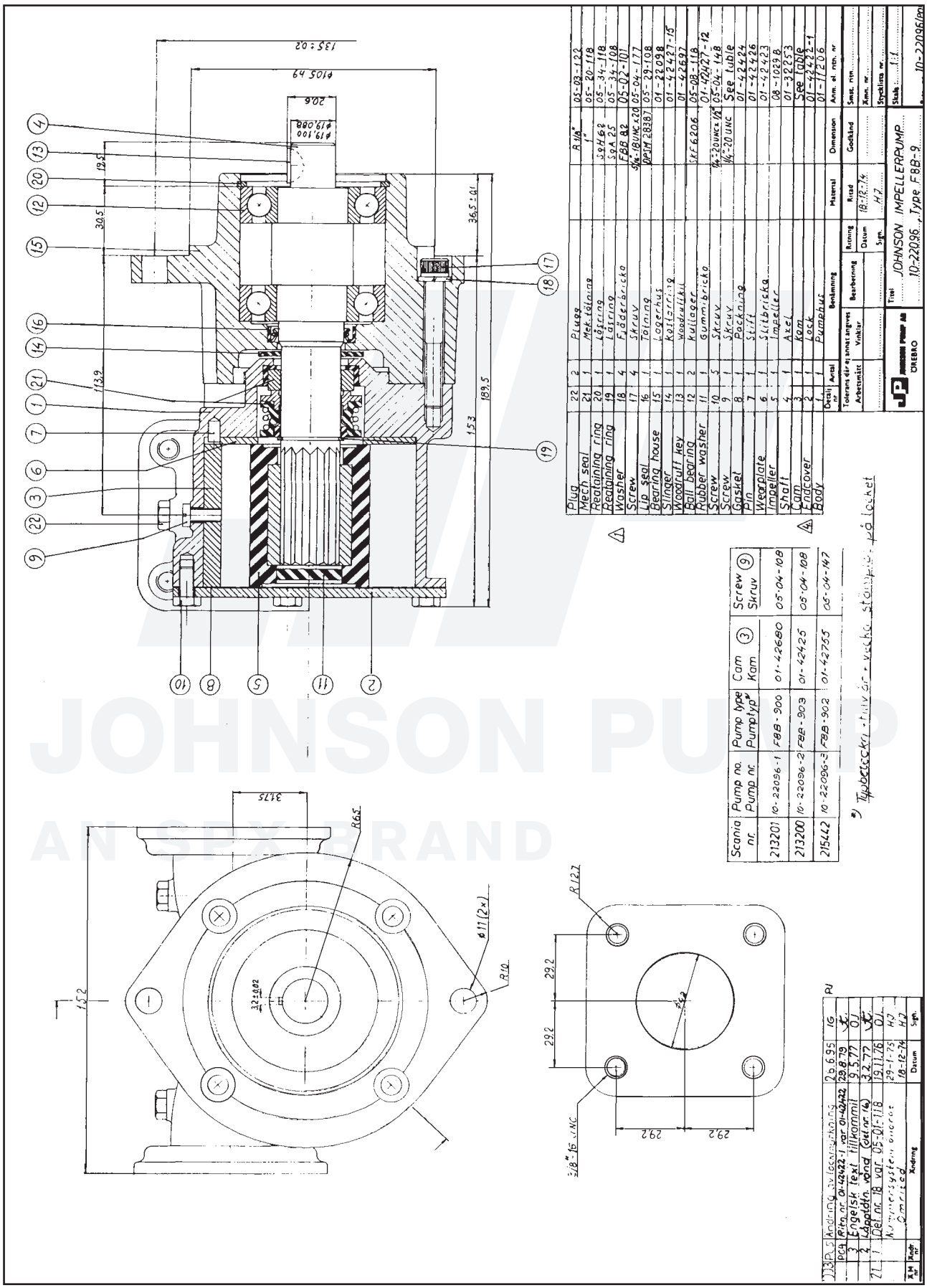

JOHNSON PUMP
AN SPX BRAND

10-24026 pump F8B-903

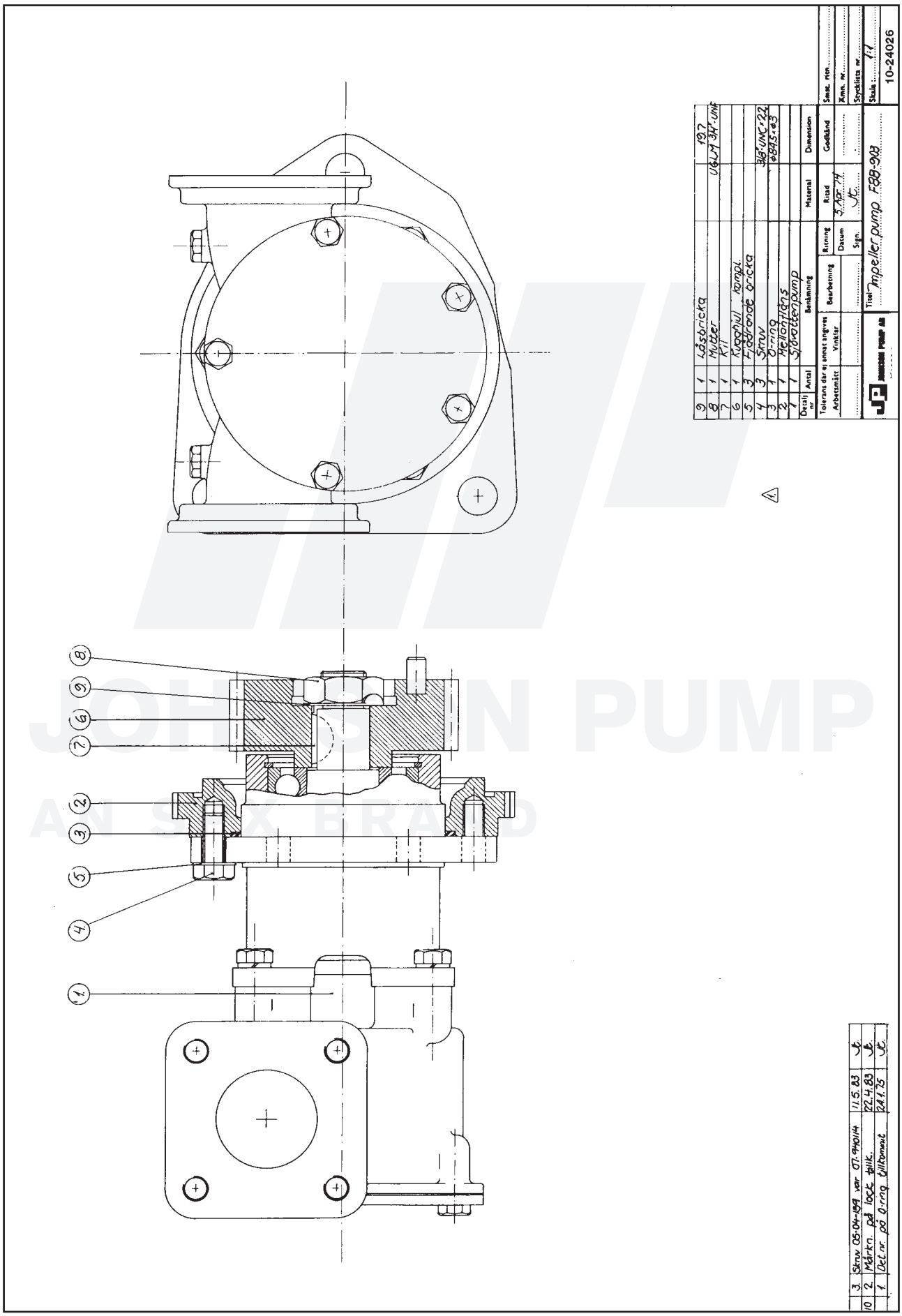

JOHNSON PUMP
AN SPX BRAND

The product, i.e. concept, design and construction, is the property of SPX Johnson Pump Marine AB

10-24091 pump F8B-9

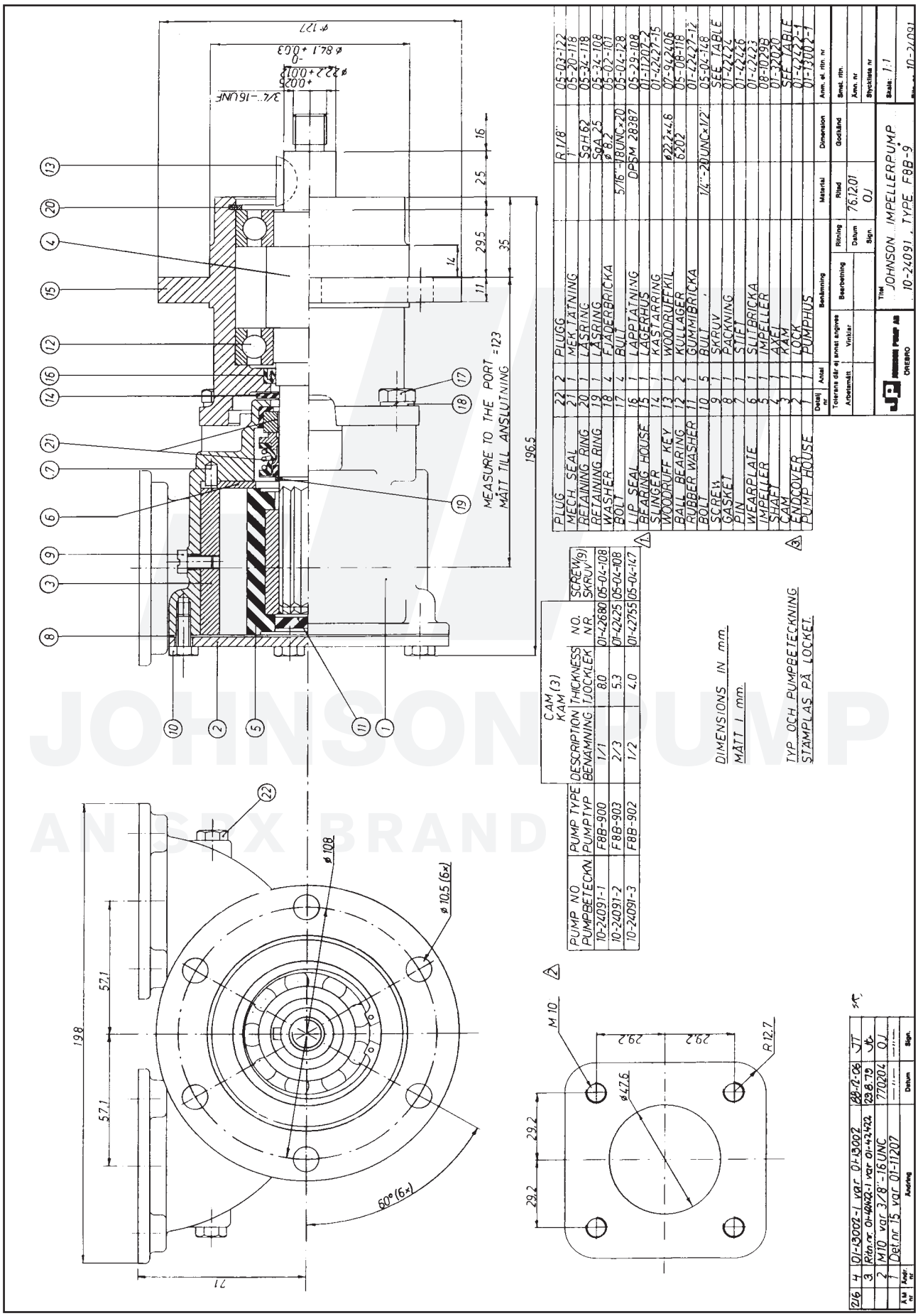

JOHNSON PUMP
AN SPX BRAND

10-24096 pump F8B-9

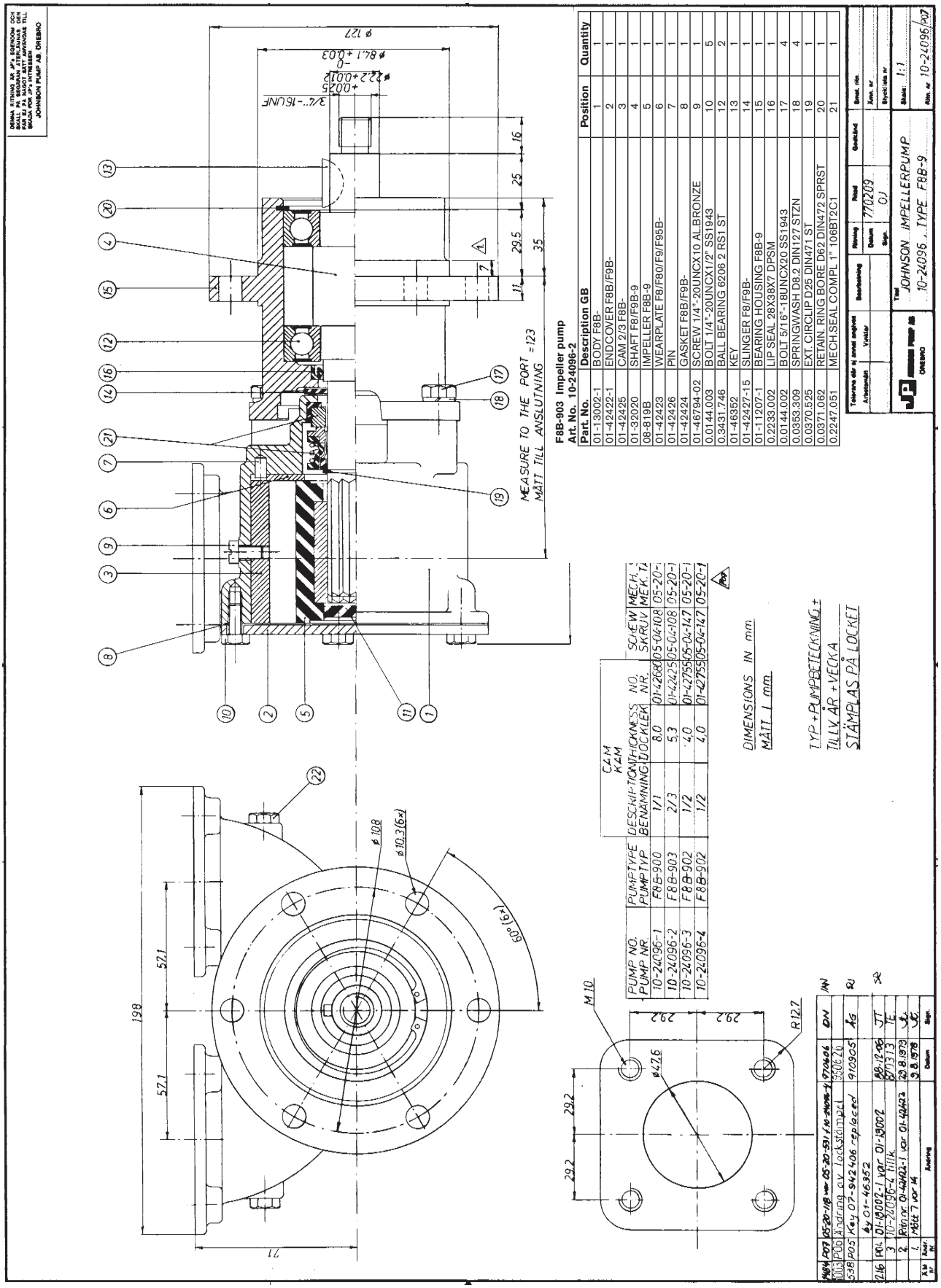

F8B-903 Impeller pump
Art. No. 10-24096-2

Part. No.	Description GB	Position	Quantity
01-13002-1	BODY F8B-	1	1
01-42422-1	ENDCOVER F8B/F9B-	2	1
01-42425	CAM 2/3 F8B-	3	1
01-32020	SHAFT F8/F9B-9	4	1
08-819B	IMPELLER F8B-9	5	1
01-42423	WEARPLATE F8/F80/F9/F95B-	6	1
01-42426	PIN	7	1
01-42424	GASKET F8B/F9B-	8	1
01-46794-02	SCREW 1/4"-20UNCX10 AL BRONZE	9	1
0.0144.003	BOLT 1/4"-20UNCX1/2" SS1943	10	5
0.3431.746	BALL BEARING 6206 2 RS1 ST	12	2
01-46352	KEY	13	1
01-42427-15	SLINGER F8/F9B-	14	1
01-11207-1	BEARING HOUSING F8B-9	15	1
0.2233.002	LIP SEAL 28X38X7 DPSM	16	1
0.0144.002	BOLT 5/16"-18UNCX20 SS1943	17	4
0.0353.309	SPRINGWASH D8.2 DIN127 STZN	18	4
0.0370.525	EXT. CIRCLIP D25 DIN471 ST	19	1
0.0371.062	RETAIN. RING BORE D62 DIN472 SPRST	20	1
0.2247.051	MECH.SEAL COMPL 1" 106B12C1	21	1

PUMP NO. PUMP NR.	PUMPTYPE PUMPTYP	DESCRIP-TION BENÄMNING	THICKNESS TJOCKLEK	CAM KAM NO. NR.	SCREW SKRUV	MECH. T MEK. T
10-24096-1	F8B-900	1/1	8.0	01-42680	05-04-108	05-20-
10-24096-2	F8B-903	2/3	5.3	01-42425	05-04-108	05-20-1
10-24096-3	F8B-902	1/2	4.0	01-42755	05-04-147	05-20-1
10-24096-4	F8B-902	1/2	4.0	01-42755	05-04-147	05-20-1

Text	JOHNSON IMPELLERPUMP
	10-24096 , TYPE F8B-9
Skala	1:1
Ritn. nr	10-24096/P07

The product, i.e. concept, design and construction, is the property of SPX Johnson Pump Marine AB

10-24130 pump F8B-9

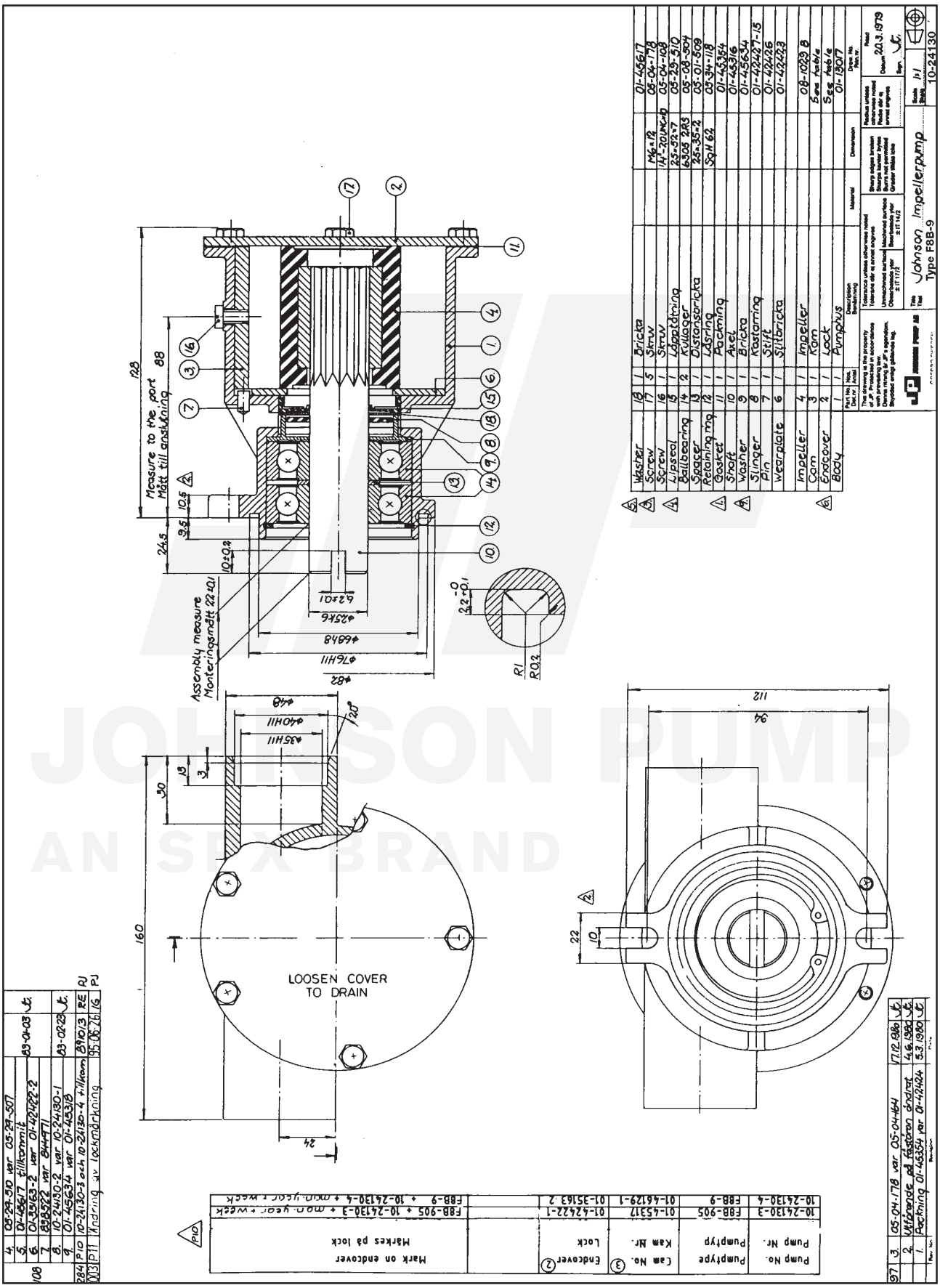

JOHNSON PUMP
AN SPX BRAND

10-24181 pump F8B-9

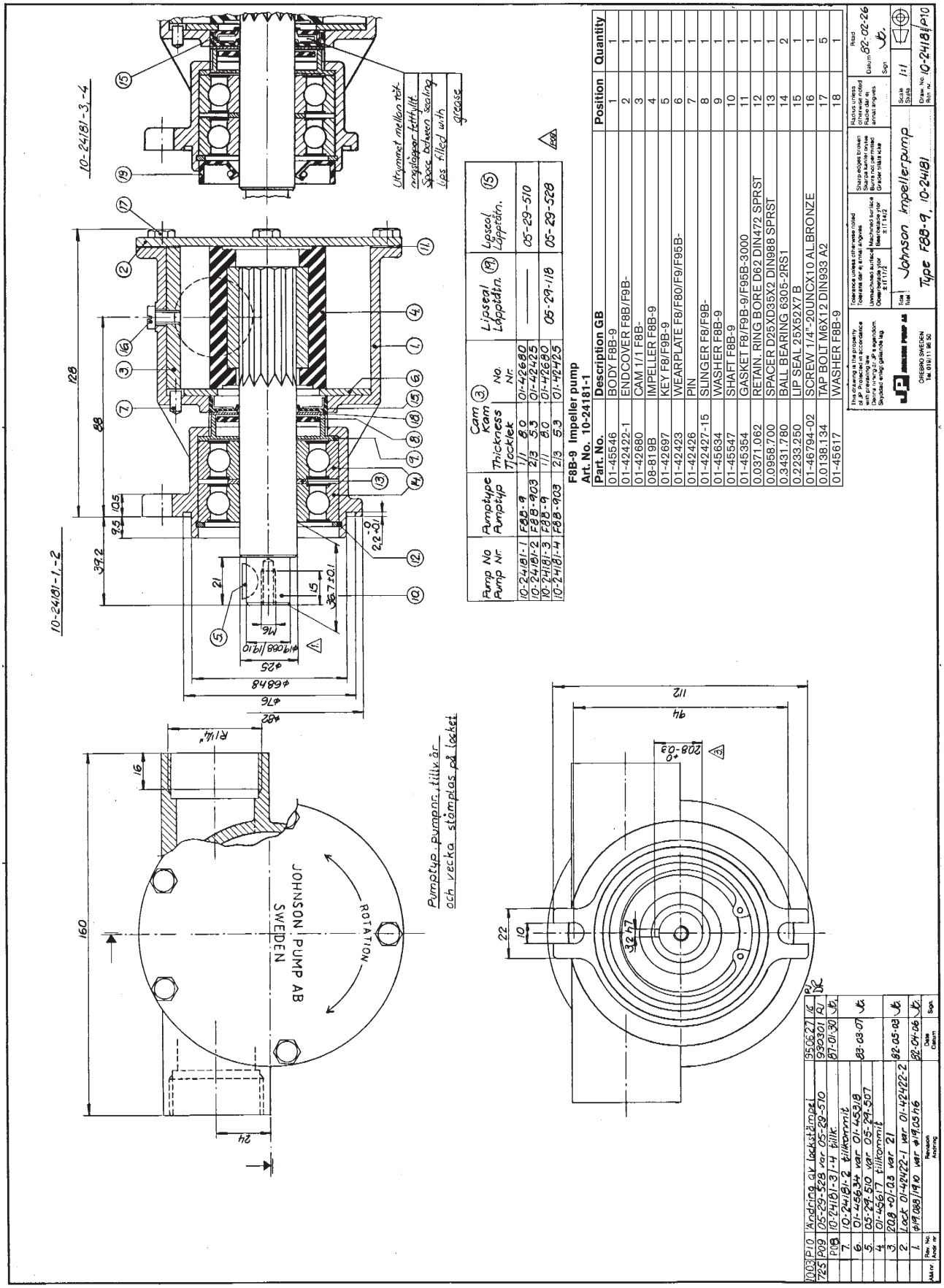

Pump No Pump Nr.	Pumptype Pumptyp	Thickness Tocklek	Cam Kam ③ No. Nr.	Ljuseal Läppdtn. (18)	Ljuseal Läppdtn. (15)
10-24181-1	F8B-9	1/1 8.0	01-42680	—	
10-24181-2	F8B-903	2/3 5.3	01-42425	—	05-29-510
10-24181-3	F8B-9	1/1 8.0	01-42680	05-29-118	
10-24181-4	F8B-903	2/3 5.3	01-42425		05-29-528

F8B-9 Impeller pump
Art. No. 10-24181-1

Part. No.	Description GB	Position	Quantity
01-45546	BODY F8B-9	1	1
01-42422-1	ENDCOVER F8B/F9B-	2	1
01-42680	CAM 1/1 F8B-	3	1
08-819B	IMPELLER F8B-9	4	1
01-42697	KEY F8/F9B-9	5	1
01-42423	WEARPLATE F8/F80/F9/F95B-	6	1
01-42426	PIN	7	1
01-42427-15	SLINGER F8/F9B-	8	1
01-45634	WASHER F8B-9	9	1
01-45547	SHAFT F8B-9	10	1
01-45354	GASKET F8/F9B-9/F95B-3000	11	1
0.0371.062	RETAIN. RING BORE D62 DIN472 SPRST	12	1
0.0958.700	SPACER D25XD35X2 DIN988 SPRST	13	1
0.3431.780	BALL BEARING 6305-2RS1	14	2
0.2233.250	LIP SEAL 25X52X7 B	15	1
01-46794-02	SCREW 1/4"-20UNCX10 ALBRONZE	16	1
0.0138.134	TAP BOLT M6X12 DIN933 A2	17	5
01-45617	WASHER F8B-9	18	1

The product, i.e. concept, design and construction, is the property of SPX Johnson Pump Marine AB

10-24315 pump F8B-9

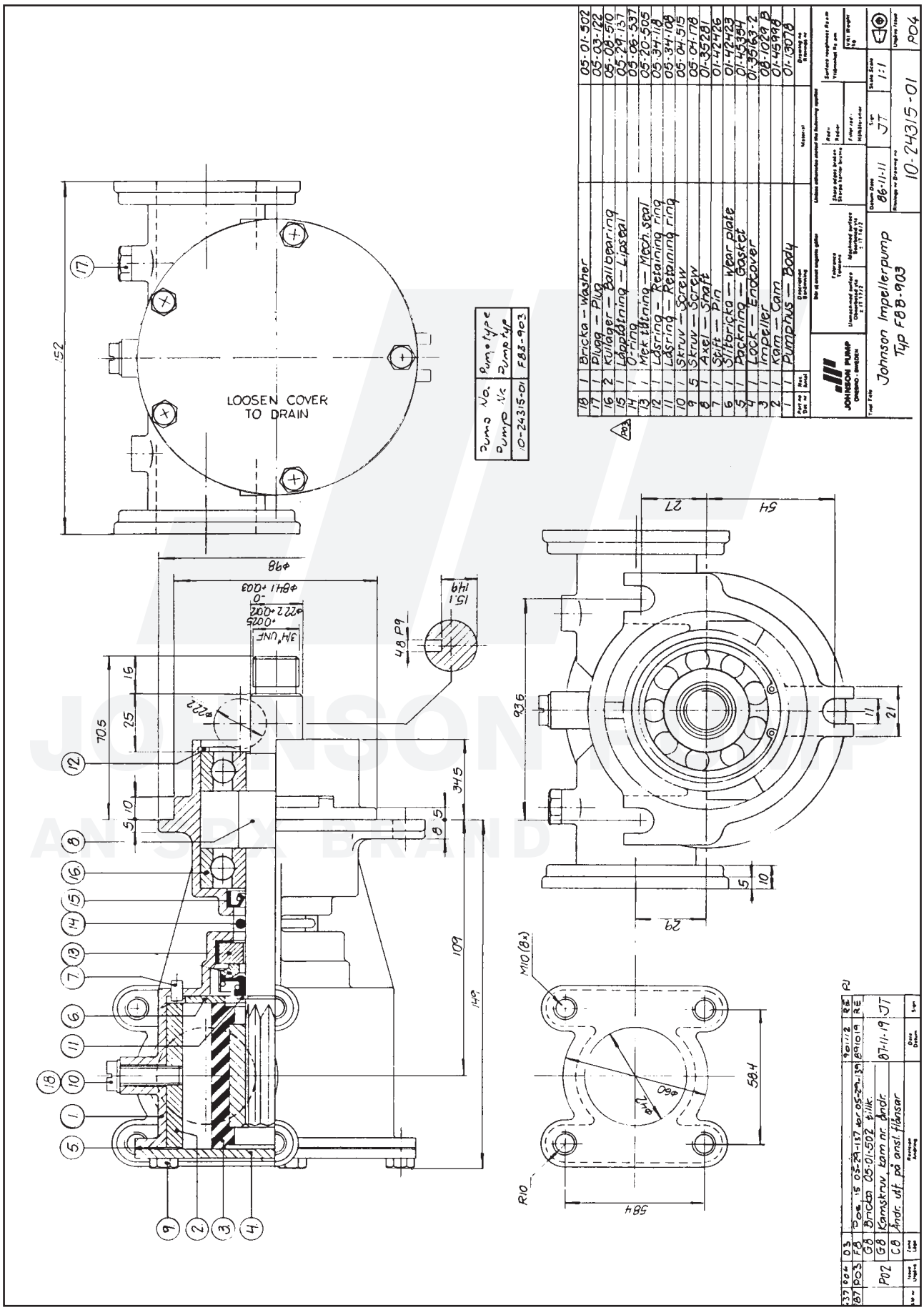

JOHNSON PUMP
AN SPX BRAND

10-13080 pump F9B-9

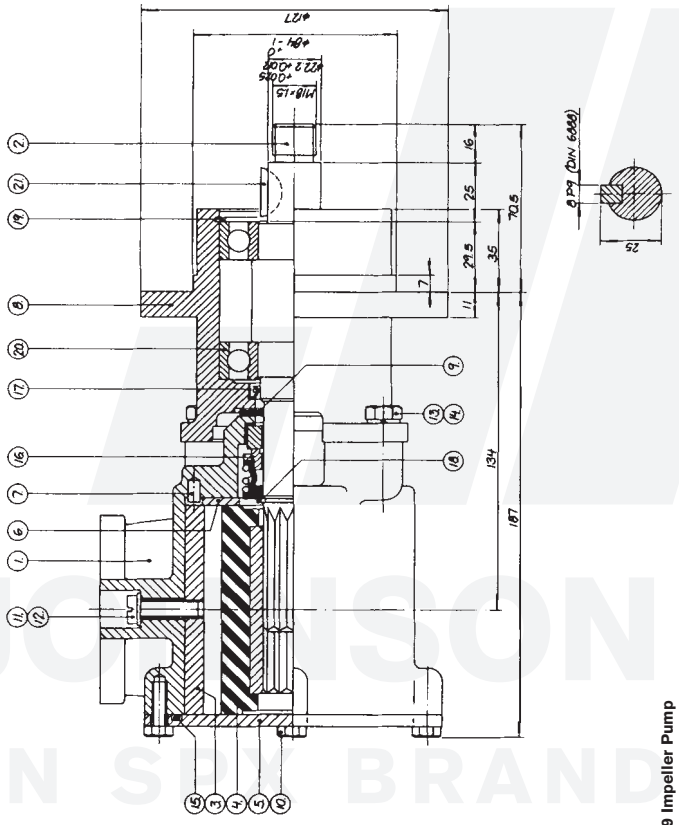

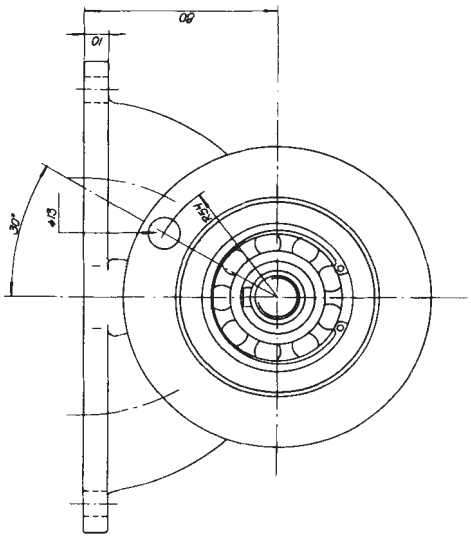

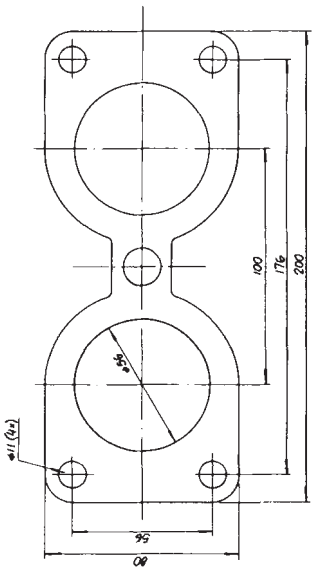

F9B-9 Impeller Pump
Art. No. 10-13080-01

Part no.	Description GB	Position	Quantity
01-11370	BODY F9B-9	1	1
01-35276	SHAFT F9B-9	2	1
01-45173	CAM 1/1 F9B-9	3	1
08-814B	IMPELLER	4	1
01-45961	ENDCOVER F9B-9	5	1
01-42423	WEARPLATE F8/F80/F9/F95B-	6	1
01-42426	PIN	7	1
01-11207-3	BEARING HOUSING F9B-9	8	1
01-42427-15	SLINGER F8/F9B-	9	1
0.0138.134	TAPBOLT M6X12 DIN933 A2	10	4
01-46790-02	WASHER D8.2XD14X1 CU	11	1
01-46794-09	SCREW M8X25 AL.BRONZE	12	1
0.0353.309	SPRINGWASH D8.2 DIN127 STZN	13	4
0.0144.002	BOLT 5/16"-18UNCX20 SS1943	14	4
0.2173.459	O-RING 94.5X3 NBR/70SH	15	1
0.2247.051	MECH.SEAL COMPL 1" 106BT2C1	16	1
0.2233.002	LIP SEAL 28X38X7 DPSM	17	1
0.0370.525	EXT. CIRCLIP D25 DIN471 ST	18	1
0.0371.062	RETAIN. RING BORE D62 DIN472 SPRST	19	1
0.3431.746	BALL BEARING 6206 2 RS1 ST	20	2
0.0503.038	WOODRUFKEY 8X9X22 DIN6888 ST	21	1

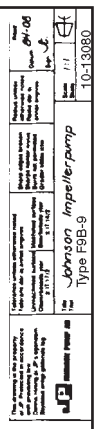

JOHNSON PUMP
AN SPX BRAND

The product, i.e. concept, design and construction, is the property of SPX Johnson Pump Marine AB

JOHNSON PUMP
AN SPX BRAND

F9B-9 Impeller Pump
Art. No. 10-13095-01

Part no.	Description GB	Position	Quantity
01-24340	BODY F9B-9	1	1
01-24246	BEARING HOUSING F7/F8/F9B-9	2	1
01-35212	SHAFT F9B-9	3	1
01-43137	CAM 1/1 F9B-	4	1
08-814B	IMPELLER	5	1
01-42426	PIN	6	1
01-42423	WEARPLATE F8/F80/F9/F95B-	7	1
01-42424	GASKET F8B/F9B-	8	1
0.0370.525	EXT. CIRCLIP D25 DIN471 ST	9	1
0.0371.072	RETAIN. RING BORE D72 DIN472 SPRST	10	1
01-42422-1	ENDCOVER F8B/F9B-	11	1
01-42427-15	SLINGER F8/F9B-	12	1
0.2233.016	LIP SEAL 36X62X7 DPSM	13	1
0.2247.051	MECH.SEAL COMPL 1” 106BT2C1	14	1
0.3431.684	ANGULAR CONTACT BEARING 3306ATN9	16	1
01-46352	KEY	17	1
0.0353.309	SPRINGWASH D8.2 DIN127 STZN	18	4
0.0144.002	BOLT 5/16”-18UNCX20 SS1943	19	4
01-46794-02	SCREW 1/4”-20UNCX10 AL.BRONZE	20	1
0.0144.200	BOLT 1/4”-20UNCX1/2” SS1943 A4	21	5
01-46789-05	WASHER D17XD32X5 STZN	22	1
0.0193.001	NUT 5/8”-18UNF LEFT SS1990	23	1
01-46060	GASKET F8/F9B-9	24	1
01-35321	GASKET F8/F9B-9	25	1
01-35320	COUPLING F8/F9B-9	26	1
01-24339	FLANGE F8/F9B-9	27	1
0.0144.004	BOLT 3/8”-16UNCX22 SS1943 STZN	28	6
0.0353.311	SPRINGWASH D10.2 DIN127B STZN	29	6
0.0379.400	LOCKWASH D16.5 DIN6798A SPRST	30	1

The product, i.e. concept, design and construction, is the property of SPX Johnson Pump Marine AB

10-13095 pump F9B-9

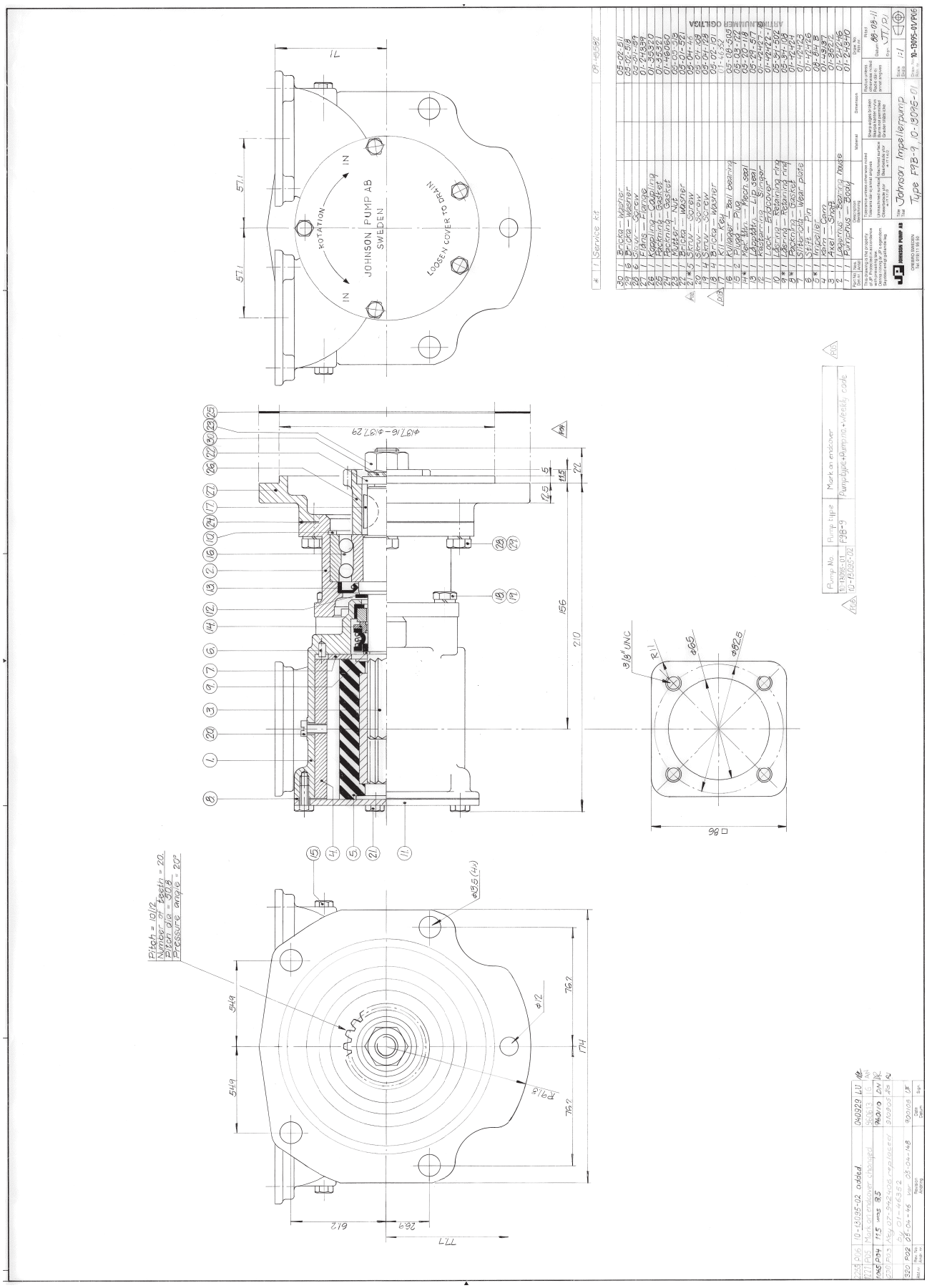

F9B-905 Impeller pump

Art. No. 10-13166-01

Service Kit No. 09-45585

Part. No.	Description GB	Position	Quantity
01-13003	BODY F9B	1	1
01-35163-1	ENDCOVER F8B-9/F8B-5 OEM	2	1
01-45018	CAM F9B-905	3	1
01-35742	SHAFT F9B-905	4	1
08-814B	IMPELLER	5	1
01-42423	WEARPLATE F8/F80/F9/F95B-	6	1
01-42426	PIN	7	1
01-42424	GASKET F8B/F9B-	8	1
01-46493	SUPPORT RING F9B-905	9	1
01-46794-02	SCREW 1/4”-20UNCX10 AL.BRONZE	10	1
0.0144.003	BOLT 1/4”-20UNCX1/2” SS1943	11	5
0.3431.486	BALL BEARING 6206 ST	12	1
0.3428.513	CYL ROLLER BEARING NJ206 ECP	13	1
0.3428.514	CYL ROLLER BEARING NU206 ECP	14	1
01-42427-15	SLINGER F8/F9B-	15	1
01-24484-1	BEARING HOUSING F9B-905	16	1
0.2233.002	LIP SEAL 28X38X7 DPSM	17	1
0.0144.002	BOLT 5/16”-18UNCX20 SS1943	18	4
0.0353.309	SPRINGWASH D8.2 DIN127 STZN	19	4
0.0370.525	EXT. CIRCLIP D25 DIN471 ST	20	1
0.0371.062	RETAIN. RING BORE D62 DIN472 SPRST	21	2
0.0370.030	RETAIN. RING SHAFT D30 DIN471 SPRST	22	1
0.2247.051	MECH.SEAL COMPL 1” 106BT2C1	23	1
0.2500.805	PLUG KR1/8” 6K 11X5 BRASS	24	2
0.0633.705	PLUG TYPE 410080 D54.5MM DBI	0	2
0.3444.029	PLASTIC BAG 250X320 MM	0	1

The product, i.e. concept, design and construction, is the property of SPX Johnson Pump Marine AB

10-13166 pump F9B-905

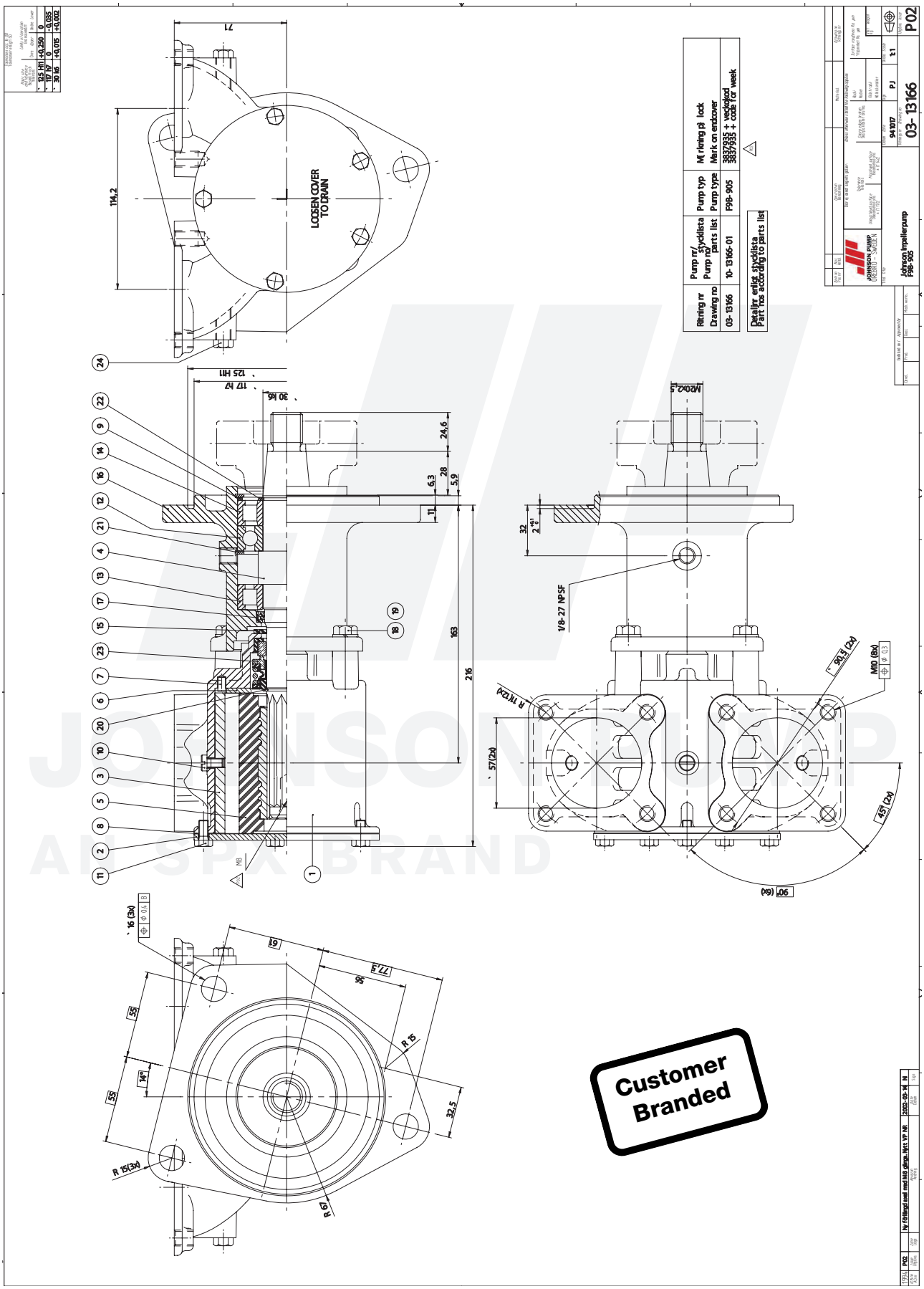

JOHNSON PUMP
AN SPX BRAND

F9B-905 Impeller pump

Art. No. 10-13171-01

Part. No.	Description GB	Position	Quantity
01-13173-1	BODY F9B-9	1	1
01-35773-1	ENDCOVER F8/F9/F95 SS	2	1
01-35833	SHAFT F9B	3	1
01-45172	CAM F9B-905	4	1
08-814B	IMPELLER	5	1
0.2172.142	O-RING 90.00X2.5 NBR70	6	1
01-42426	PIN	7	1
01-46538	WEARPLATE F8/F9/F95 SS	8	1
01-13174-1	BEARING HOUSING F9B-9	9	1
01-42747	SPACER F8/F9	10	1
01-24510	PULLEY F9B-9	11	1
0.0353.309	SPRINGWASH D8.2 DIN127 STZN	12	4
0.0502.001	KEY A 4X4X20 DIN6885A ST	13	1
01-46794-09	SCREW M8X25 AL.BRONZE	14	1
0.0141.916	TAP BOLT M8X20 DIN933 8.8ZP	15	4
0.0138.134	TAP BOLT M6X12 DIN933 A2	16	5
0.0146.001	COLLARSCREW M8X16 DIN6921 8.8	17	1
0.3431.780	BALL BEARING 6305-2RS1	18	2
0.2230.319	V-GASKET V 25A NBR70	19	1
0.2247.051	MECH.SEAL COMPL 1” 106BT2C1	20	1
0.0370.525	EXT. CIRCLIP D25 DIN471 ST	21	1
0.0371.062	RETAIN. RING BORE D62 DIN472 SPRST	22	1
0.0351.501	WASHER D8.4XD24X1.5 ISO7093 A2	23	1
0.2173.451	O-RING 54.5X3.0 SS1586 NBR70	24	1
01-46537	DRAIN PIPE	25	1
01-46539	PAD	0	1
0.0142.617	TAP BOLT M10X40 DIN933 8.8ZP	0	2
01-46789-01	WASHER D10.5XD22X3 STZN	0	2
0.0370.025	EXT. CIRCLIP D25 DIN471 ST	27	1

The product, i.e. concept, design and construction, is the property of SPX Johnson Pump Marine AB

10-13171 pump F9B-905

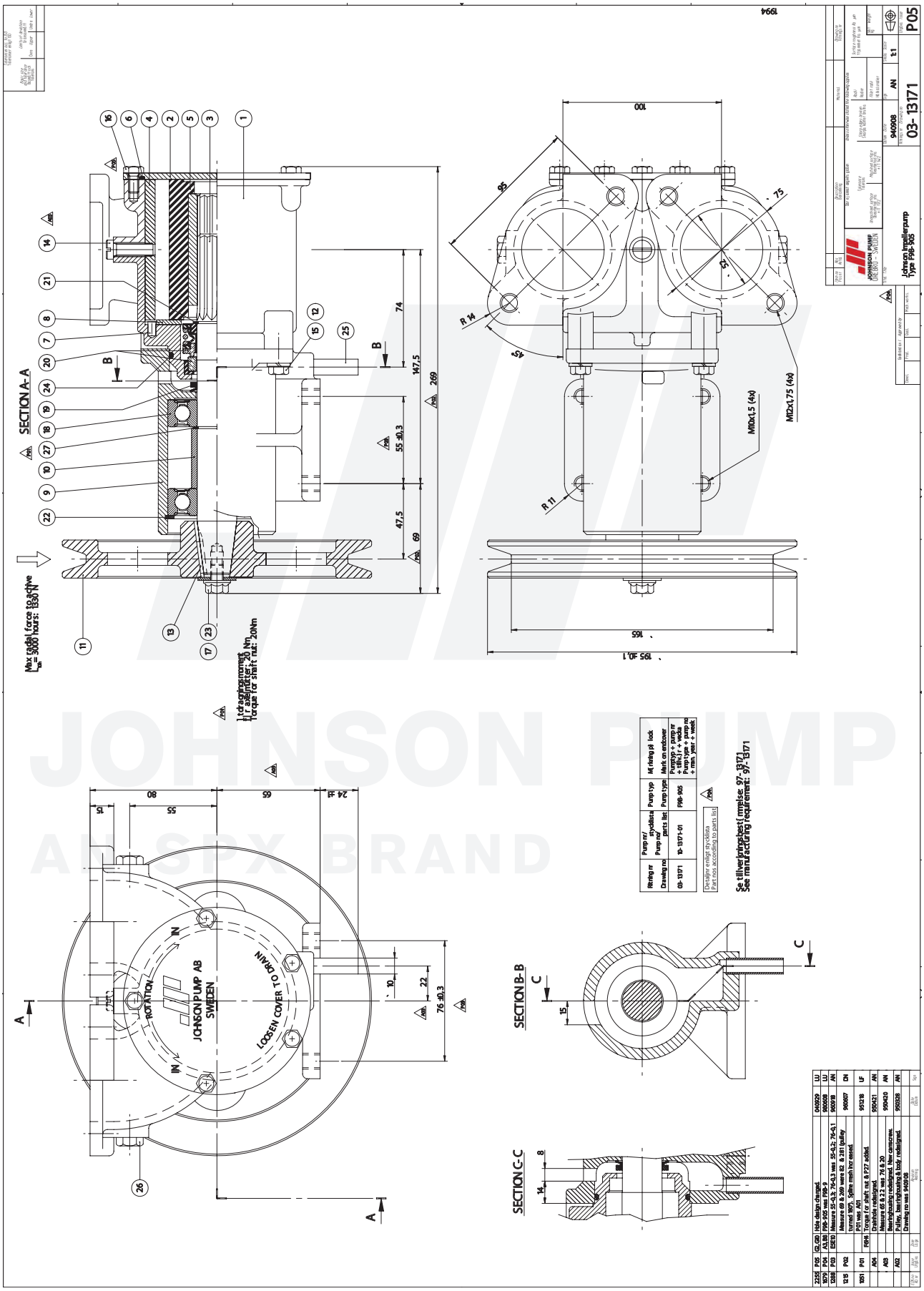

JOHNSON PUMP
AN SPX BRAND

10-24006 pump F9B-9

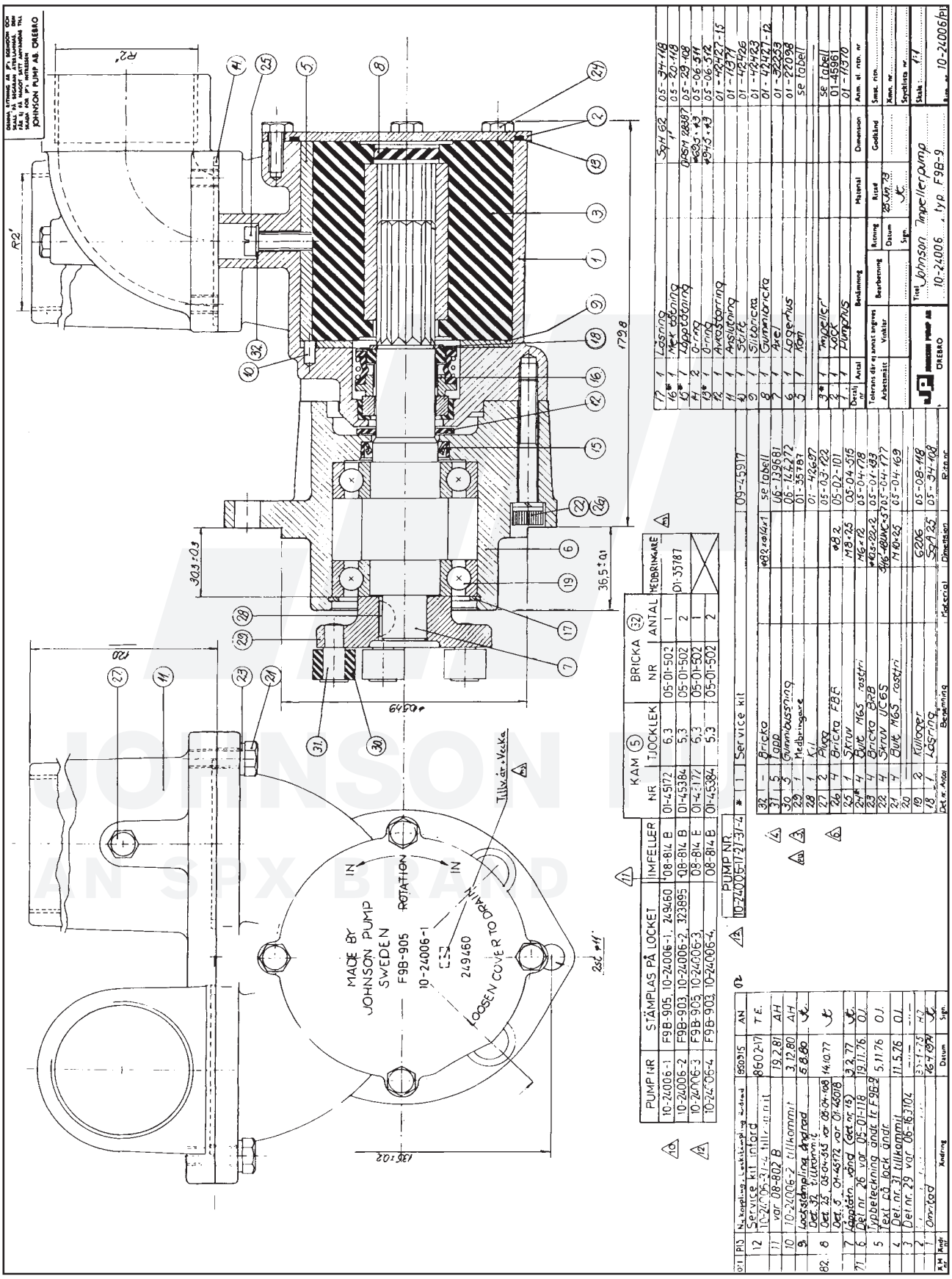

The product, i.e. concept, design and construction, is the property of SPX Johnson Pump Marine AB

10-24072 pump F9B-9

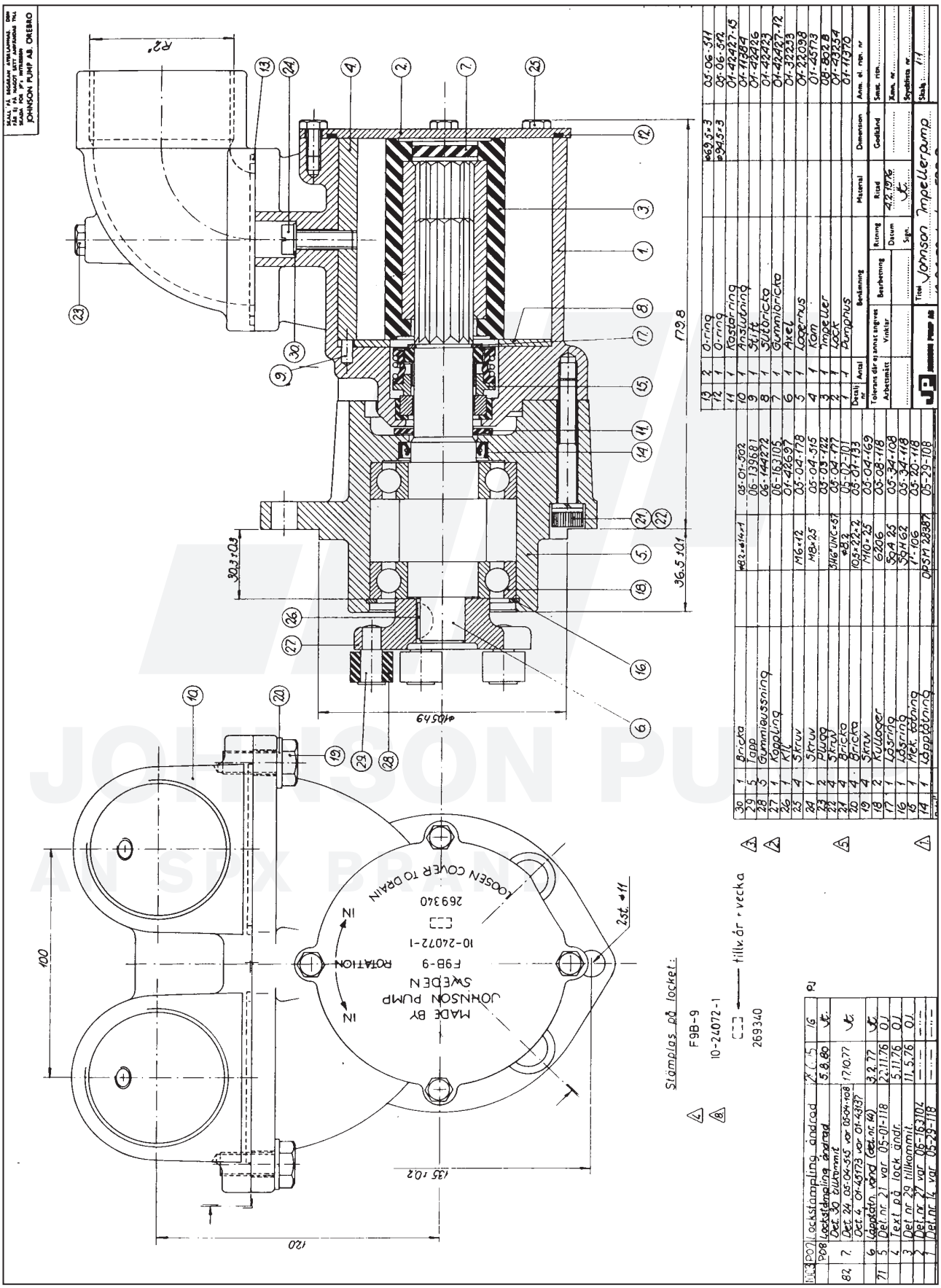

JOHNSON PUMP
AN SPX BRAND

10-24090 pump F9B-9

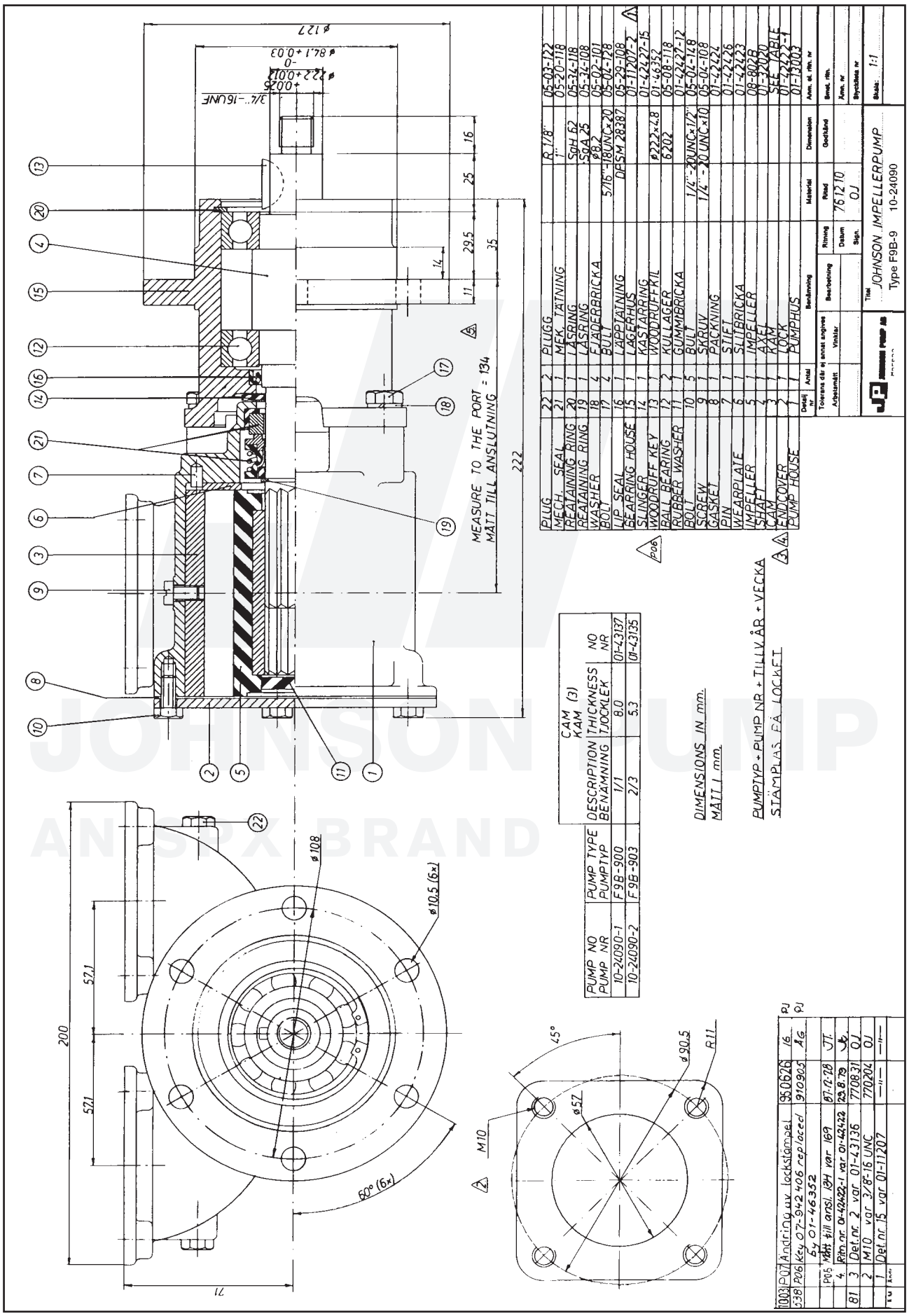

Detalj nr	Antal	Benämning	Material	Dimension
22	2	PLUGG		R 1/8"
21	1	MEK. TÄTNING		1"
20	1	LÅSRING	SgH 62	
19	1	LÅSRING	SgA 25	
18	4	FJÄDERBRICKA	ø8.2	
17	2	BULT		5/16"-18UNC×20
16	1	LÄPPTÄTNING	DFSM 28387	
15	1	LAGERHUS		
14	1	KASTARRING		
13	1	WOODRUFF-KIL		ø22.2×4.8
12	2	KULLAGER	6202	
11	1	GUMMIBRICKA		
10	5	BULT		1/4"-20UNC×1/2"
9	5	SKRUV		1/4"-20UNC×10
8	1	PACKNING		
7	1	STIFT		
6	1	SLITBRICKA		
5	1	IMPELLER		
4	1	AXEL		
3	1	KAM		
2	1	LÖCK		
1	1	PUMPHUS		

PUMP NO PUMP NR	PUMP TYPE PUMPTYP	DESCRIPTION BENÄMNING	CAM KAM (3) THICKNESS TJOCKLEK	NO NR
10-24090-1	F9B-900	1/1	8.0	01-43137
10-24090-2	F9B-903	2/3	5.3	01-43135

1003	P07	Ändring av lockstämpel	950626	IG
538	P06	Key 07-942 406 replaced by 01-46352	910905	AG
	P05	Mtt till ansl. JJH var 169	87-12-28	JT
	4	Rtn nr 01-42422-1 var 01-42422	85.8.29	JL
81	3	Det.nr. 2 var 01-43136	770831	OJ
	2	M10 var 3/8"-16 UNC	770202	OJ
	1	Det.nr 15 var 01-11207	—"—	—"—

JOHNSON PUMP
AN SPX BRAND

The product, i.e. concept, design and construction, is the property of SPX Johnson Pump Marine AB

10-24159 pump F9B-9

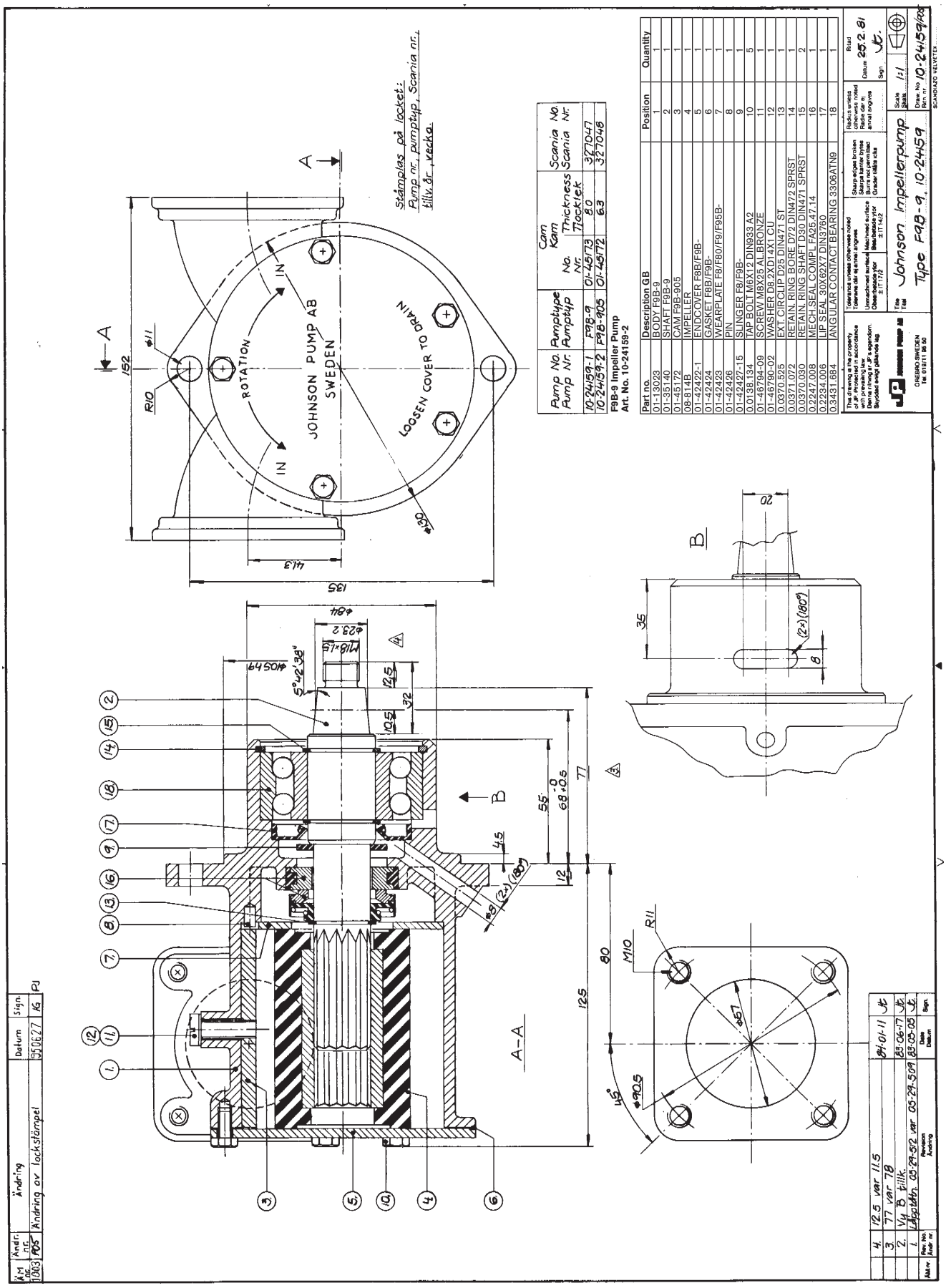

Pump No. Pump Nr.	Pumptype Pumptyp	Cam Kam No. Nr.	Cam Kam Thickness Tjocklek	Scania No. Scania Nr.
10-24159-1	F9B-9	01-45173	8.0	327047
10-24159-2	F9B-905	01-45172	6.3	327048

F9B-9 Impeller Pump
Art. No. 10-24159-2

Part no.	Description GB	Position	Quantity
01-13023	BODY F9B-9	1	1
01-35140	SHAFT F9B-9	2	1
01-45172	CAM F9B-905	3	1
08-814B	IMPELLER	4	1
01-42422-1	ENDCOVER F8B/F9B-	5	1
01-42424	GASKET F8B/F9B-	6	1
01-42423	WEARPLATE F8/F80/F9/F95B-	7	1
01-42426	PIN	8	1
01-42427-15	SLINGER F8/F9B-	9	1
0.01138.134	TAP BOLT M6X12 DIN933 A2	10	5
01-46794-09	SCREW M8X25 ALBRONZE	11	1
01-46790-02	WASHER D8.2XD14X1 CU	12	1
0.0370.525	EXT. CIRCLIP D25 DIN471 ST	13	1
0.0371.072	RETAIN. RING BORE D72 DIN472 SPRST	14	1
0.0370.030	RETAIN. RING SHAFT D30 DIN471 SPRST	15	2
0.2247.008	MECH.SEAL COMPL FA25.47.14	16	1
0.2234.006	LIP SEAL 30X62X7 DIN3760	17	1
0.3431.684	ANGULAR CONTACT BEARING 3306ATN9	18	1

10-24239 pump F9B-9

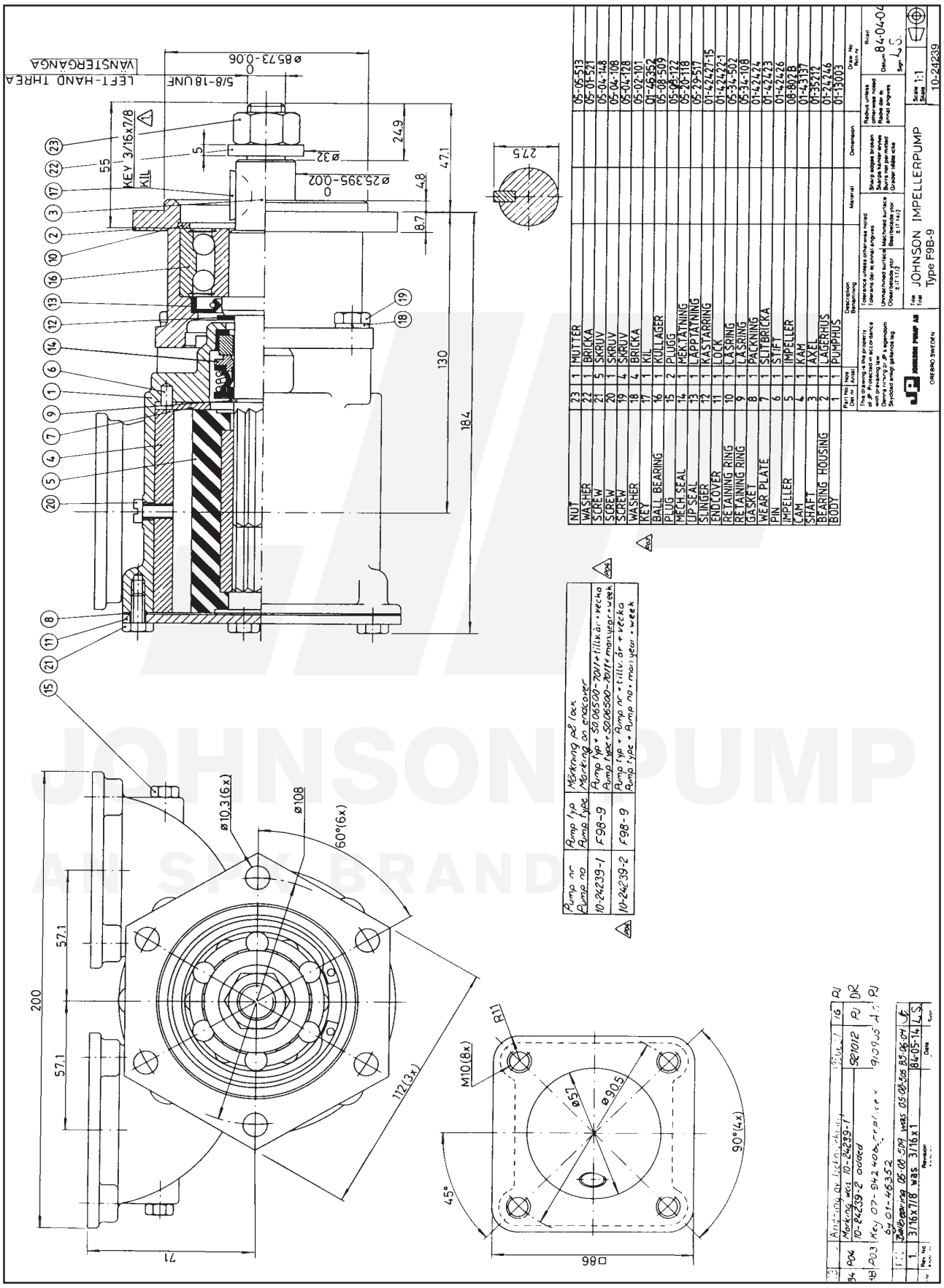

JOHNSON PUMP
AN SPX BRAND

The product, i.e. concept, design and construction, is the property of SPX Johnson Pump Marine AB

JOHNSON PUMP
AN SPX BRAND

F9B-9 Scania Impeller pump
Art. No. 10-24308-1

Part. No.	Description GB	Position	Quantity
01-13079	BODY F9B-9	1	1
01-35282	SHAFT F9B-9	2	1
01-45173	CAM 1/1 F9B-9	3	1
08-814B	IMPELLER	4	1
01-35284	ENDCOVER F9B-9/F95B-30000	5	1
01-45354	GASKET F8/F9B-9/F95B-3000	6	1
01-42423	WEARPLATE F8/F80/F9/F95B-	7	1
01-42426-2	PIN	8	1
01-42427-15	SLINGER F8/F9B-	9	1
0.0138.134	TAP BOLT M 6X12 DIN933 A2	10	5
01-46794-09	SCREW M8X25 AL.BRONZE	11	1
01-46790-02	WASHER D8.2XD14X1 CU	12	1
0.0370.525	EXT. CIRCLIP D25 DIN471 ST	13	1
0.0371.072	RETAIN. RING BORE D72 DIN472 SPRST	14	1
0.0370.030	RETAIN. RING SHAFT D30 DIN471 SPRST	15	2
0.2247.008	MECH.SEAL COMPL FA25.47.14	16	1
0.2234.006	LIP SEAL 30X62X7 DIN3760	17	1
0.3431.684	ANGULAR CONTACT BEARING 3306ATN9	18	1

The product, i.e. concept, design and construction, is the property of SPX Johnson Pump Marine AB

10-24308 pump F9B-9

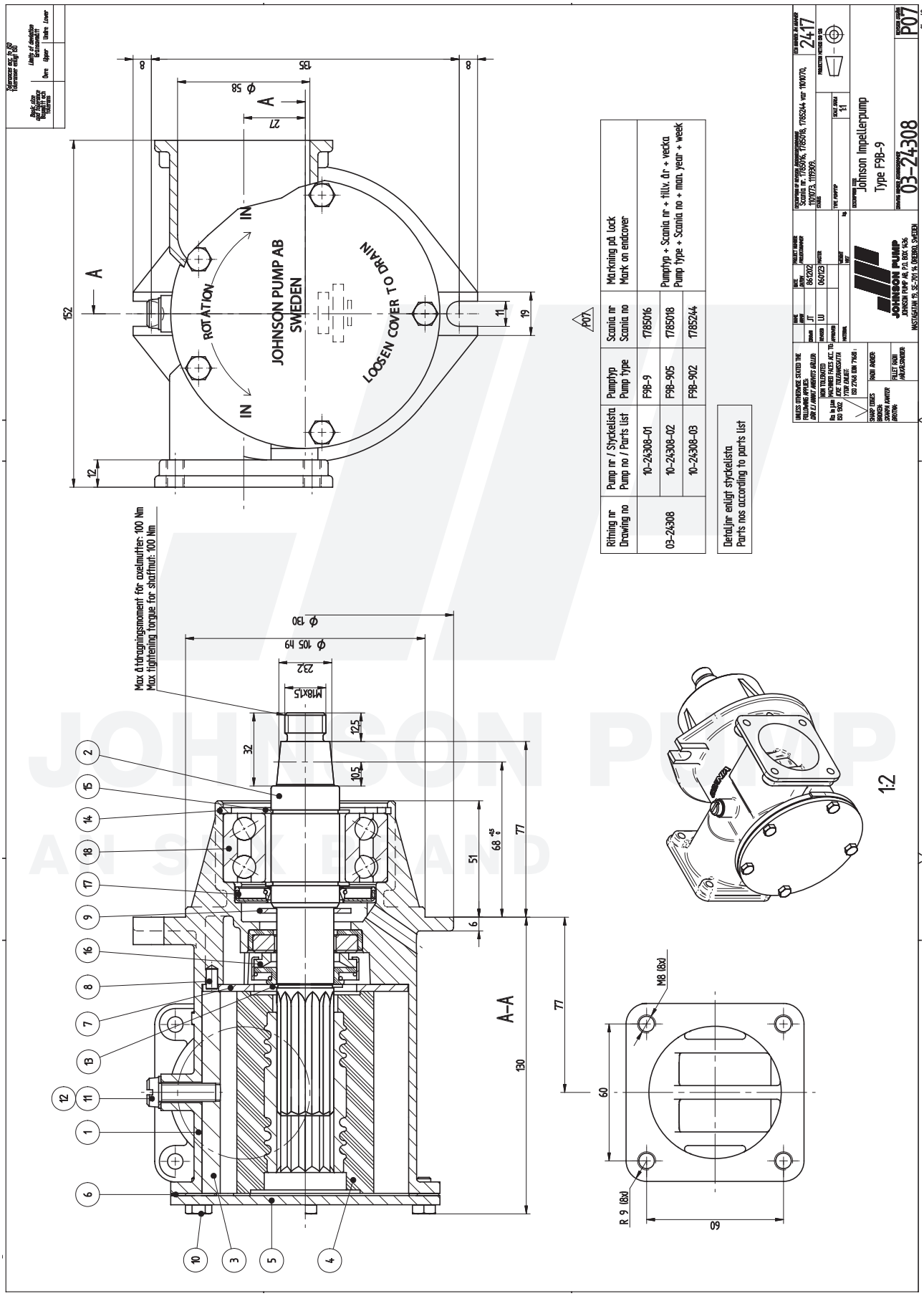

Ritning nr / Drawing no	Pump nr / Stycklista / Pump no / Parts list	Pumptyp / Pump type	Scania nr / Scania no	Markning på lock / Mark on endcover
03-24308	10-24308-01	F9B-9	1785016	Pumptyp + Scania nr + tillv. år + vecka / Pump type + Scania no + man. year + week
	10-24308-02	F9B-905	1785018	
	10-24308-03	F9B-902	1785244	

JOHNSON PUMP
AN SPX BRAND

F9B-9 Impeller pump
Art. No. 10-24430-01

Part. No.	Description GB	Position	Quantity
01-13003	BODY F9B	1	1
01-24433-1	BEARING HOUSING F9B-9	2	1
01-35698	SHAFT F9B-9	3	1
01-45018	CAM F9B-905	4	1
08-814B	IMPELLER	5	1
01-42426	PIN	6	1
01-42423	WEARPLATE F8/F80/F9/F95B-	7	1
01-42424	GASKET F8B/F9B-	8	1
0.0370.525	EXT. CIRCLIP D25 DIN471 ST	9	1
0.0371.072	RETAIN. RING BORE D72 DIN472 SPRST	10	1
01-42422-1	ENDCOVER F8B/F9B-	11	1
01-42427-15	SLINGER F8/F9B-	12	1
0.2233.016	LIP SEAL 36X62X7 DPSM	13	1
0.2247.051	MECH.SEAL COMPL 1” 106BT2C1	14	1
0.3431.684	ANGULAR CONTACT BEARING 3306ATN9	16	1
0.0353.309	SPRINGWASH D8.2 DIN127 STZN	17	4
0.0350.208	WASHER D 8.4 DIN125B A2	18	4
0.0144.002	BOLT 5/16”-18UNCX20 SS1943	19	4
01-46794-02	SCREW 1/4”-20UNCX10 AL.BRONZE	20	1
0.0144.003	BOLT 1/4”-20UNCX1/2” SS1943	21	5
0.0383.500	LOCK NUT M28x1.5	22	1
0.0383.026	WASHER	23	1

The product, i.e. concept, design and construction, is the property of SPX Johnson Pump Marine AB

10-24430 pump F9B-9

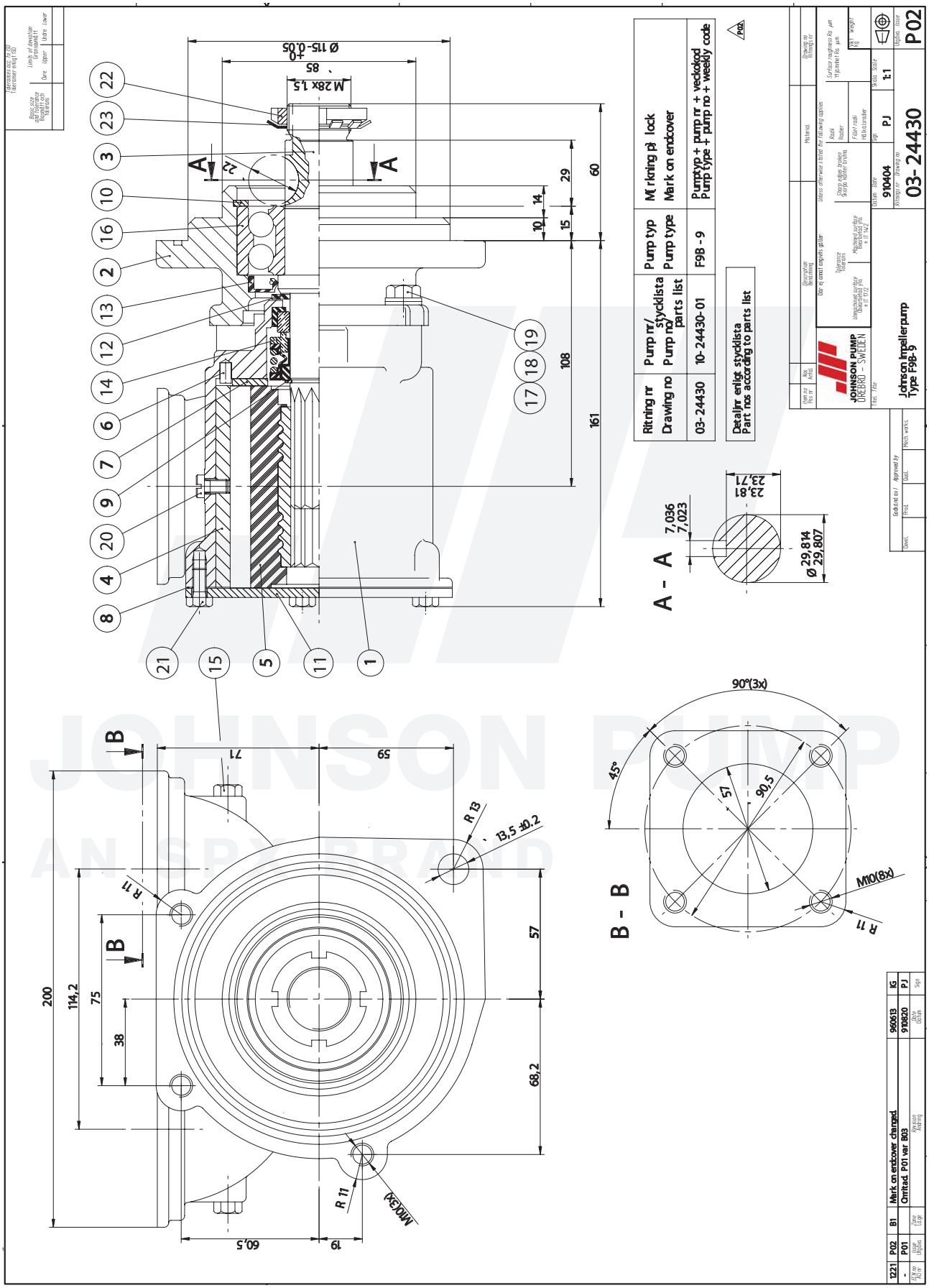

JOHNSON PUMP
AN SPX BRAND

F95B-9 Impeller pump
Art. No. 10-13165-01

Part No.	Description GB	Position	Quantity
01-13119-2	BODY F95B-9	1	1
01-24490-1	BEARING HOUSING F95B-9	2	1
01-35743	SHAFT F95B-9	3	1
01-35744	CAM 1/1 F95B-	4	1
01-35773-2	ENDCOVER F8/F9/F95 SS	5	1
01-42423	WEARPLATE F8/F80/F9/F95B-	6	1
01-42426	PIN	7	1
01-46524	SLINGER F95B-9	8	1
01-46323	WASHER F95B-	9	1
01-46352	KEY	10	1
01-46615	WASHER	11	1
0.0353.111	SPRING WASHER D10.2 DIN127B A2	12	4
0.0383.007	LOCKING WASHER D35 ST MB7	13	1
0.0300.544	DO NOT USE REPLACED WITH 0.0300.744	14	1
0.0138.134	TAPBOLT M6X12 DIN933 A2	15	5
01-46794-09	SCREW M8X25 AL.BRONZE	16	2
0.0141.922	TAP BOLT M10X25 DIN933 8.8ZN	17	4
0.0141.164	TAP BOLT M12X 20 M DIN933 8.8	18	1
0.0243.007	LOCK NUT M35X1.5 ST KM7	19	1
0.2172.142	O-RING 90.00X2.5 NBR70	20	1
0.3428.516	CON ROLLER BEARING 32007X ST	21	2
0.2247.018	MECH.SEAL CPL FA35.60.16	22	1
0.2234.502	LIP SEAL 40x72x7 DIN3760 BA	23	1
0.0370.535	EXT. CIRCLIP D35 DIN471 BRONZE	24	1
08-820B	IMPELLER F95B-	25	1

The product, i.e. concept, design and construction, is the property of SPX Johnson Pump Marine AB

10-13165 pump F95B-9

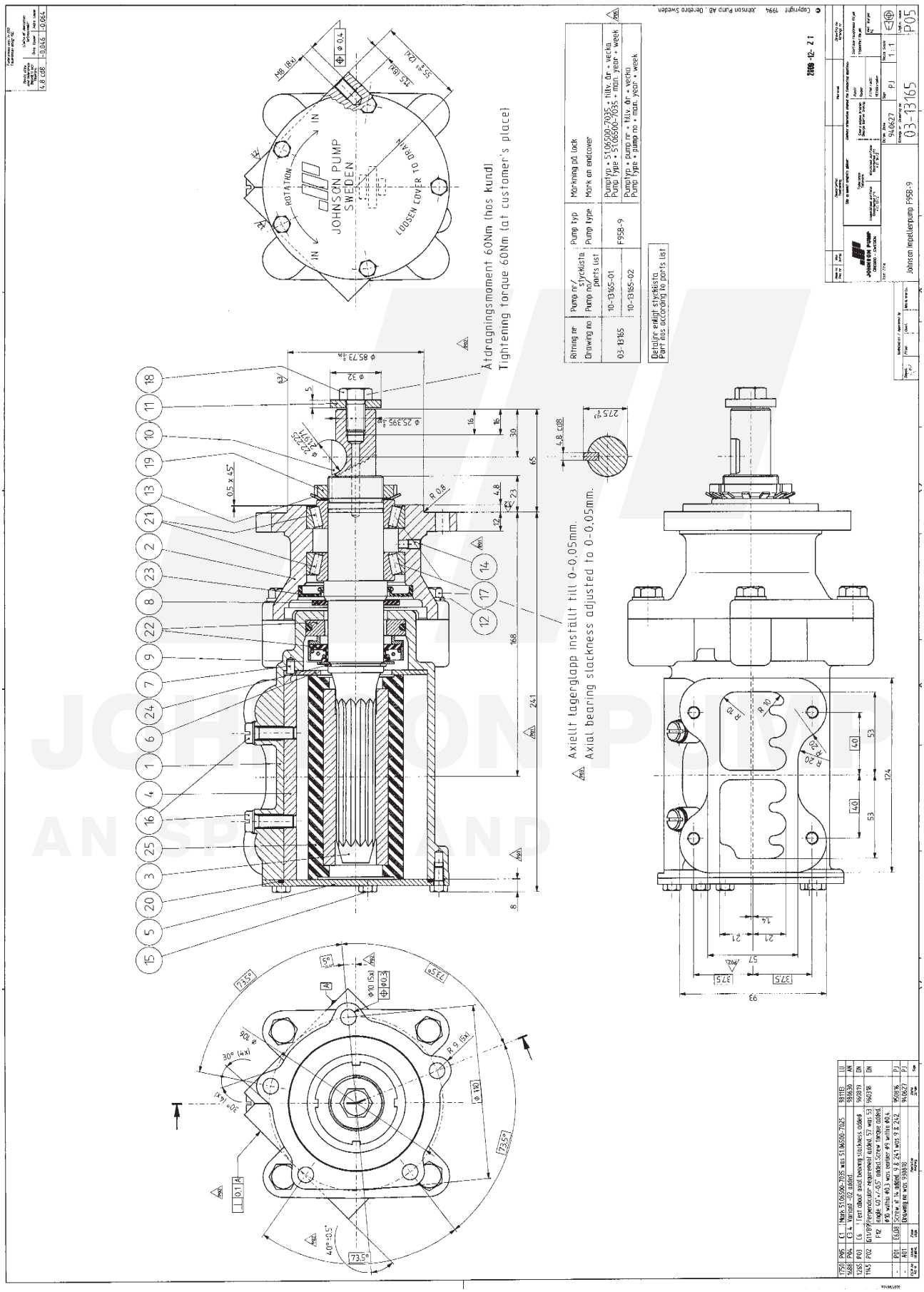

F95B-9 Impeller pump
Art. No. 10-13248-01

Part no.	Description GB	Position	Quantity
01-13119-2	BODY F95B-9	1	1
01-13249-1	BEARING HOUSING F95B-9	2	1
01-35892	SHAFT F95B-9	3	1
01-35744	CAM 1/1 F95B-	4	1
01-35773-2	ENDCOVER F8/F9/F95 SS	5	1
01-46538	WEARPLATE F8/F9/F95 SS	6	1
01-42426	PIN	7	1
01-46524	SLINGER F95B-9	8	1
01-46323	WASHER F95B-	9	1
0.3428.515	CYL ROLLER BEARING NU207 ECP	10	1
0.3431.745	ANGLE CONTACT BEARING 3207A-2RS1	11	1
0.0353.111	SPRING WASHER D10.2 DIN127B A2	12	4
01-46790-02	WASHER D8.2XD14X1 CU	13	2
01-46774	SPACER F95B-9	14	1
0.0138.134	TAPBOLT M6X12 DIN933 A2	15	5
01-46794-09	SCREW M8X25 AL.BRONZE	16	2
0.0141.922	TAP BOLT M10X25 DIN933 8.8ZN	17	4
0.0371.072	RETAIN. RING BORE D72 DIN472 SPRST	18	1
0.0370.035	EXT. CIRCLIP D35 DIN471 ST	19	1
0.2172.142	O-RING 90.00X2.5 NBR70	20	1
01-46775	SPACER F95B-9	21	1
0.2247.018	MECH.SEAL CPL FA35.60.16	22	1
0.0503.010	WOODRUFKEY 3X3.7X10 DIN6888 ST	23	1
0.0370.535	EXT. CIRCLIP D35 DIN471 BRONZE	24	1
08-820B	IMPELLER F95B-	25	1
0.2234.502	LIP SEAL 40x72x7 DIN3760 BA	26	1

F95-903 Impeller pump
Art. No. 10-13248-02

Part No.	Description GB	Position	Quantity
01-13119-2	BODY F95B-9	1	1
01-13249-1	BEARING HOUSING F95B-9	2	1
01-35892	SHAFT F95B-9	3	1
01-35854	CAM 2/3 F95B-	4	1
01-35773-2	ENDCOVER F8/F9/F95 SS	5	1
01-46538	WEARPLATE F8/F9/F95 SS	6	1
01-42426	PIN	7	1
01-46524	SLINGER F95B-9	8	1
01-46323	WASHER F95B-	9	1
0.3428.515	CYL ROLLER BEARING NU207 ECP	10	1
0.3431.745	ANGLE CONTACT BEARING 3207A-2RS1	11	1
0.0353.111	SPRING WASHER D10.2 DIN127B A2	12	4
01-46790-02	WASHER D8.2XD14X1 CU	13	2
01-46774	SPACER F95B-9	14	1
0.0138.134	TAPBOLT M6X12 DIN933 A2	15	5
01-46794-09	SCREW M8X25 AL.BRONZE	16	2
0.0141.922	TAP BOLT M10X25 DIN933 8.8ZN	17	4
0.0371.072	RETAIN. RING BORE D72 DIN472 SPRST	18	1
0.0370.035	EXT. CIRCLIP D35 DIN471 ST	19	1
0.2172.142	O-RING 90.00X2.5 NBR70	20	1
01-46775	SPACER F95B-9	21	1
0.2247.018	MECH.SEAL CPL FA35.60.16	22	1
0.0503.010	WOODRUFKEY 3X3.7X10 DIN6888 ST	23	1
0.0370.535	EXT. CIRCLIP D35 DIN471 BRONZE	24	1
08-820B	IMPELLER F95B-	25	1
0.2234.502	LIP SEAL 40x72x7 DIN3760 BA	26	1

The product, i.e. concept, design and construction, is the property of SPX Johnson Pump Marine AB

10-13248 pump F95B-9

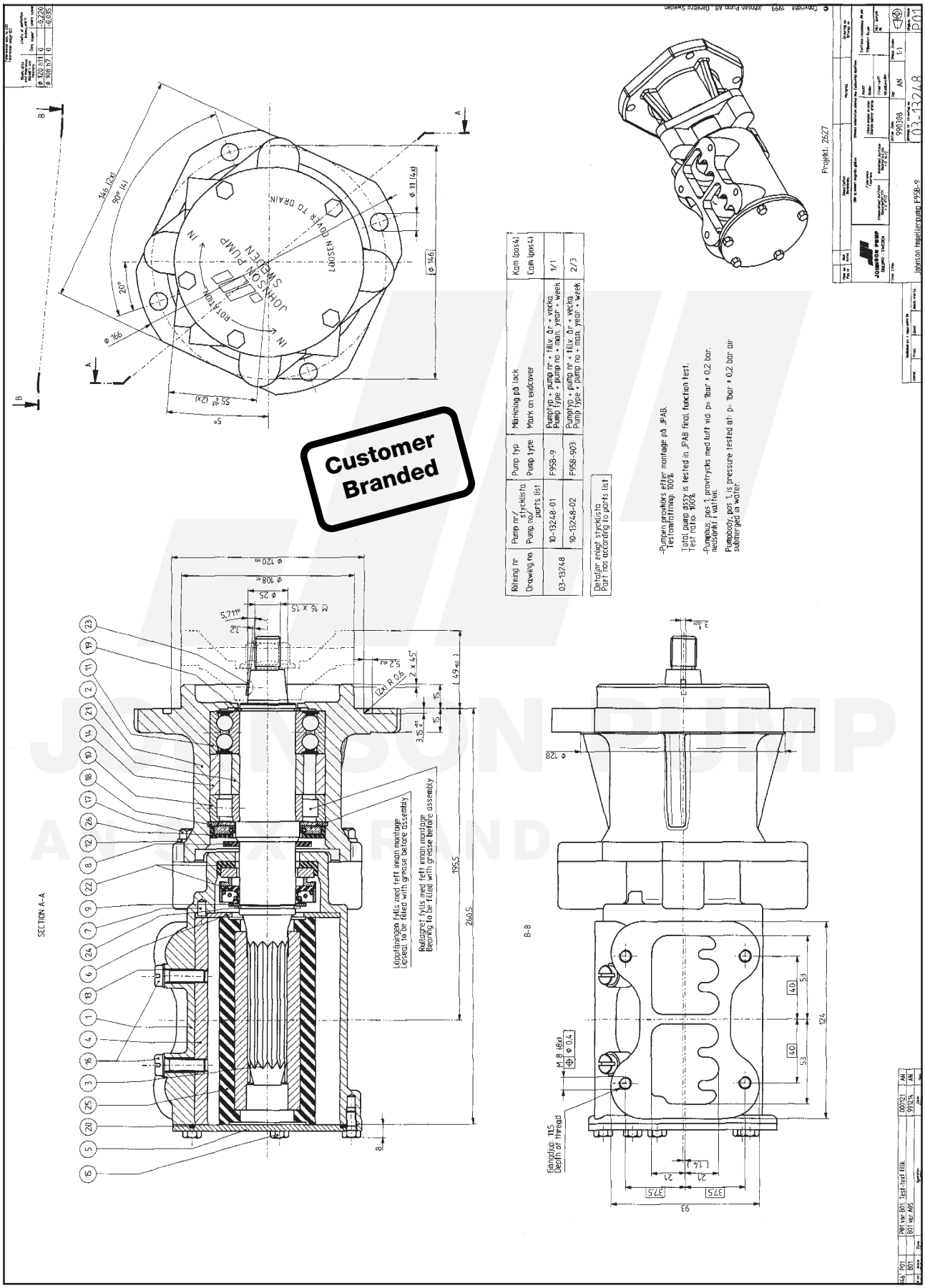

JOHNSON PUMP
ASSEX BRAND

10-24214 pump F4B-9

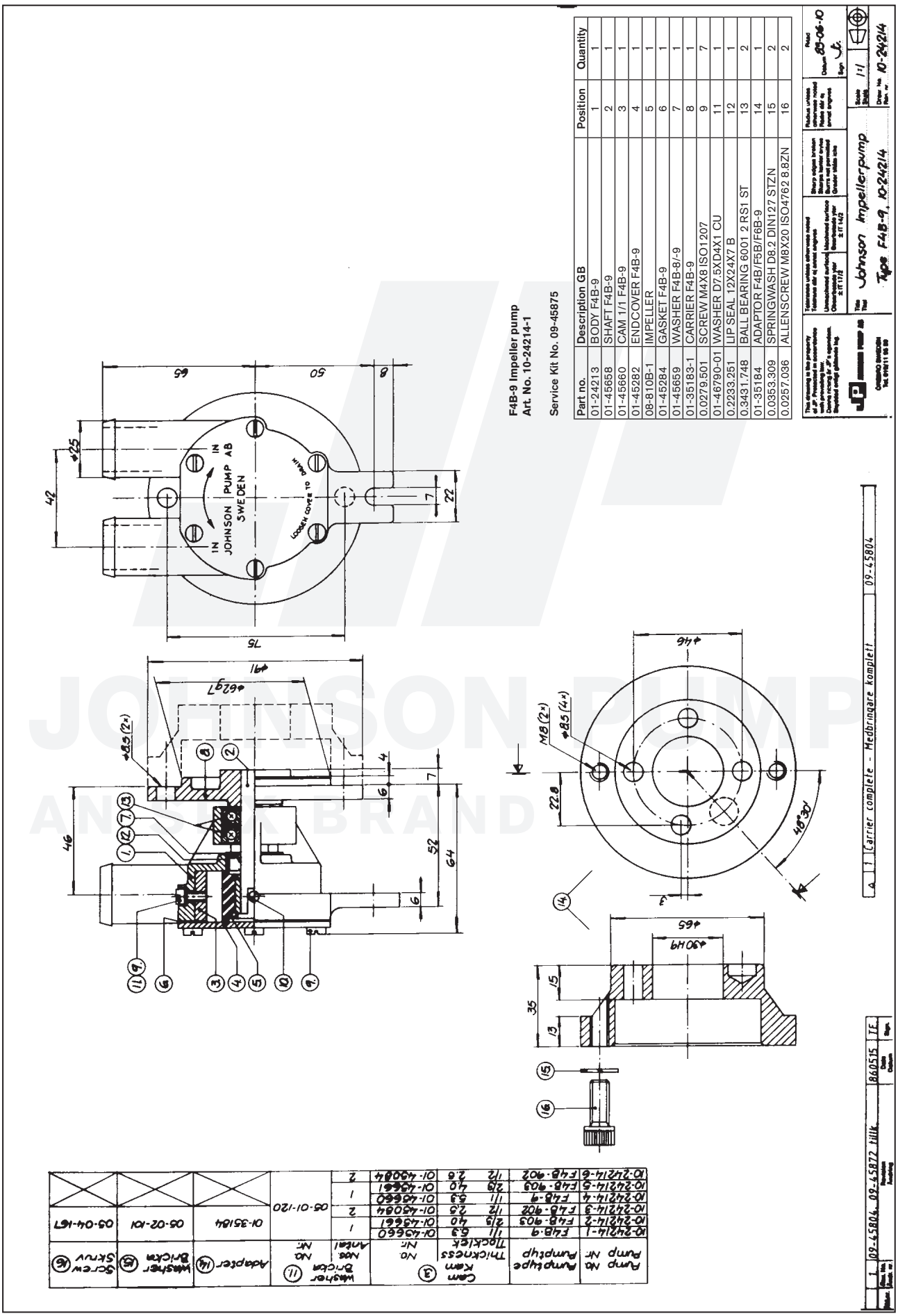

F4B-9 Impeller pump
Art. No. 10-24214-1

Service Kit No. 09-45875

Part no.	Description GB	Position	Quantity
01-24213	BODY F4B-9	1	1
01-45658	SHAFT F4B-9	2	1
01-45660	CAM 1/1 F4B-9	3	1
01-45282	ENDCOVER F4B-9	4	1
08-810B-1	IMPELLER	5	1
01-45284	GASKET F4B-9	6	1
01-45659	WASHER F4B-8/-9	7	1
01-35183-1	CARRIER F4B-9	8	1
0.0279.501	SCREW M4X8 ISO1207	9	7
01-46790-01	WASHER D7.5XD4X1 CU	11	1
0.2233.251	LIP SEAL 12X24X7 B	12	1
0.3431.748	BALL BEARING 6001 2 RS1 ST	13	2
01-35184	ADAPTOR F4B/F5B/F6B-9	14	1
0.0353.309	SPRINGWASH D8.2 DIN127 STZN	15	2
0.0257.036	ALLENSCREW M8X20 ISO4762 8.8ZN	16	2

Pump No Nr	Pumptype Pump	Cam Kam Thickness Tjocklek	Cam Kam No. Nr.	Washer Brickor No. Nr.	Washer Brickor No. Nr. Antal	Adapter (14)	Washer Brickor (15)	Screw Skruv (16)
10-24214-1	F4B-9	1/1 5.3	01-45660	01-35184	05-02-120	01-35184	05-02-101	05-04-167
10-24214-2	F4B-9Q3	2/3 4.0	01-45661					
10-24214-3	F4B-9Q2	1/2 2.5	01-45084		2			
10-24214-4	F4B-9	1/1 5.3	01-45660		1			
10-24214-5	F4B-9Q3	2/3 4.0	01-45661					
10-24214-6	F4B-9Q2	1/2 2.5	01-45084		2			

JOHNSON PUMP
ANCHOR BRAND

The product, i.e. concept, design and construction, is the property of SPX Johnson Pump Marine AB

10-24290 pump F4B-9

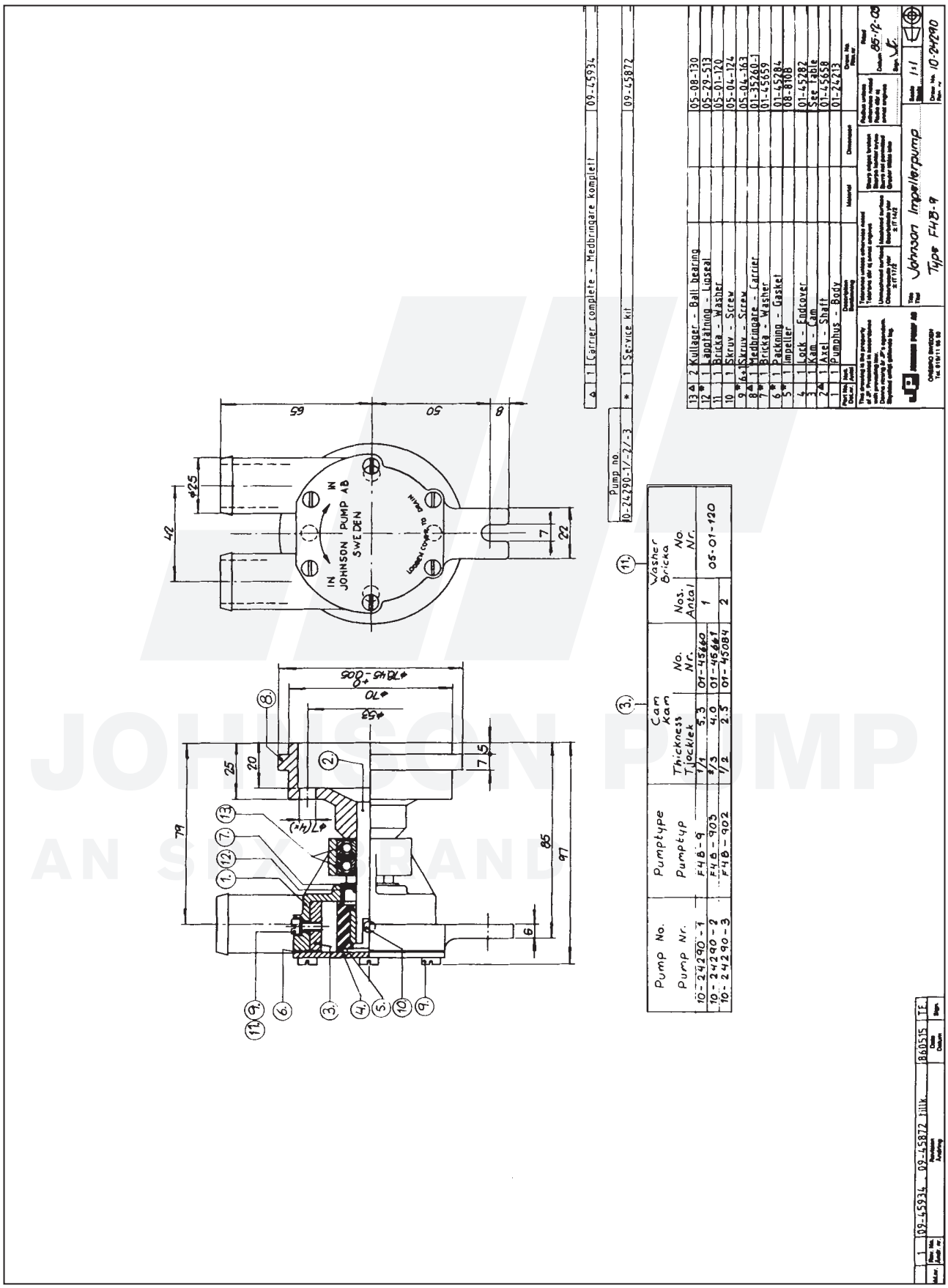

JOHNSON PUMP
AN SPX BRAND

F5B-9 Impeller pump
Art. No. 10-13223-01

Part. No.	Description GB	Position	Quantity
01-24553	PUMPBODY F5B-9 (VPoA)	1	1
01-35856	HOSE CONNECTION F5B-9 (VPoA)	2	2
08-1027B-01	IMPELLER VP825940	3	1
01-35859	BEARING HOUSING F5B-9 (VPoA)	4	1
01-13222-1	PULLEY F5B-9 (VPoA)	5	1
0.2233.001	LIP SEAL 16X28X7 DPSM	6	1
0.3431.753	BALL BEARING 6006 2RS1/VT90 ST	7	1
0.0141.501	SCREW M5X12 ISO4017 BRASS	8	4
0.2173.476	O-RING 59.6X2.4 SS1586 NBR70	9	1
0.2172.016	O-RING 26.7X1.78 BS1806 NBR70	10	2

F5B-9 Impeller pump
Art. No. 10-13223-02

Part No.	Description	Position	Quantity
01-24553	PUMPBODY F5B-9 (VPoA)	1	1
01-35856	HOSE CONNECTION F5B-9 (VPoA)	2	2
08-1027B-01	IMPELLER VP825940	3	1
01-35859	BEARING HOUSING F5B-9 (VPoA)	4	1
01-13222-2	PULLEY F5B-9 (VPoA)	5	1
0.2233.001	LIP SEAL 16X28X7 DPSM	6	1
0.3431.753	BALL BEARING 6006 2RS1/VT90 ST	7	1
0.0141.501	SCREW M5X12 ISO4017 BRASS	8	4
0.2173.476	O-RING 59.6X2.4 SS1586 NBR70	9	1
0.2172.016	O-RING 26.7X1.78 BS1806 NBR70	10	2

F5B-9 Impeller pump
Art. No. 10-13223-03

Part No.	Description GB	Position	Quantity
01-24553	PUMPBODY F5B-9 (VPoA)	1	1
01-35856	HOSE CONNECTION F5B-9 (VPoA)	2	2
08-1027B-01	IMPELLER VP825940	3	1
01-35859	BEARING HOUSING F5B-9 (VPoA)	4	1
01-13268-1	CARRIER F5B-9 (VPoA)	5	1
0.2233.001	LIP SEAL 16X28X7 DPSM	6	1
0.3431.753	BALL BEARING 6006 2RS1/VT90 ST	7	1
0.0141.501	SCREW M5X12 ISO4017 BRASS	8	4
0.2173.476	O-RING 59.6X2.4 SS1586 NBR70	9	1
0.2172.016	O-RING 26.7X1.78 BS1806 NBR70	10	2

F5B-9 Impeller pump
Art. No. 10-13223-04

Part no.	Description GB	Position	Quantity
01-24553-2	PUMPBODY F5B-9 (VPoA)	1	1
01-35856	HOSE CONNECTION F5B-9 (VPoA)	2	2
08-1027B-01	IMPELLER VP825940	3	1
01-35859	BEARING HOUSING F5B-9 (VPoA)	4	1
01-13222-5	PULLEY F5B-9	5	1
0.2233.001	LIP SEAL 16X28X7 DPSM	6	1
0.3431.753	BALL BEARING 6006 2RS1/VT90 ST	7	1
0.0141.501	SCREW M5X12 ISO4017 BRASS	8	4
0.2173.476	O-RING 59.6X2.4 SS1586 NBR70	9	1
0.2172.016	O-RING 26.7X1.78 BS1806 NBR70	10	2

The product, i.e. concept, design and construction, is the property of SPX Johnson Pump Marine AB

10-13223 pump F5B-9

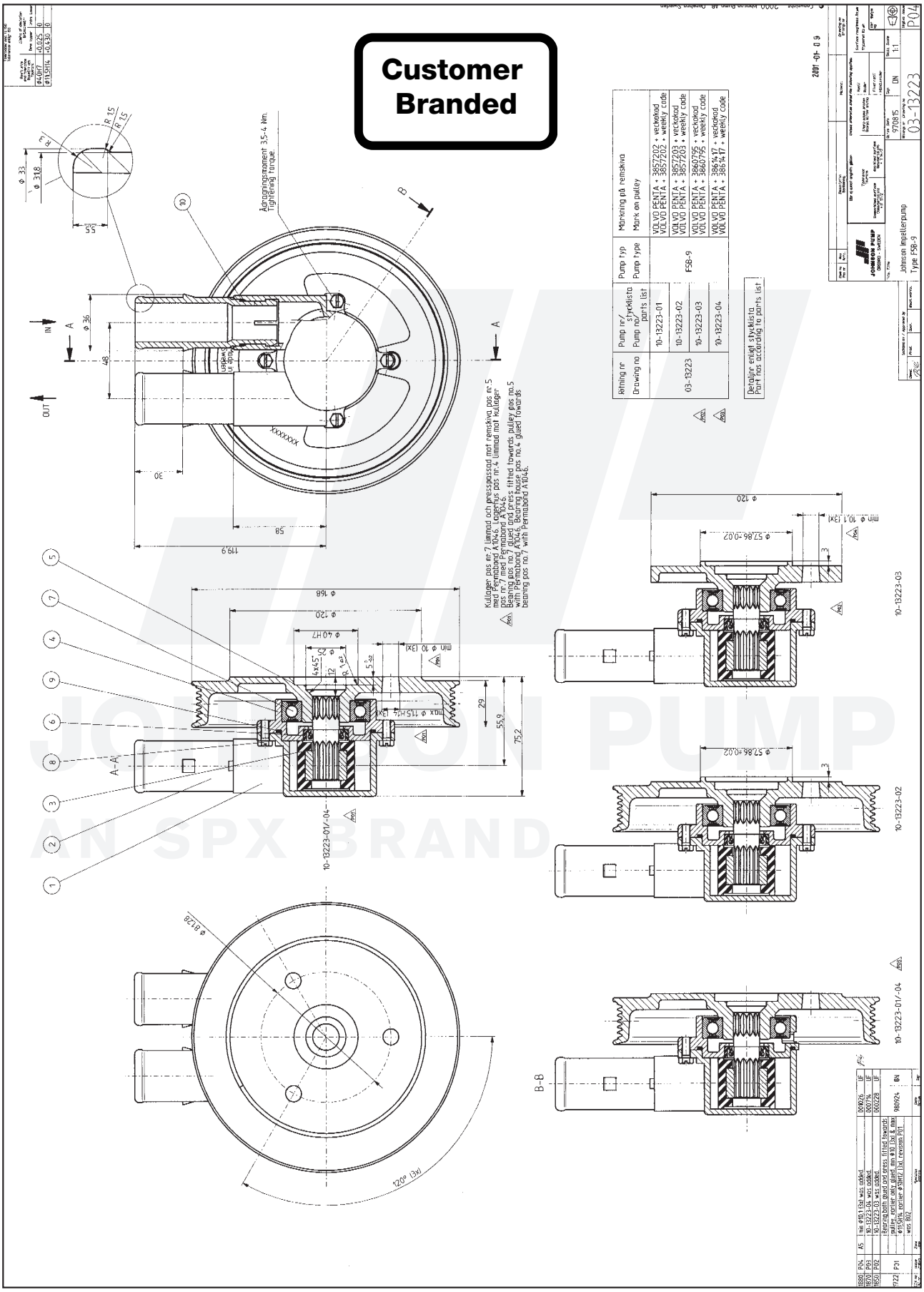

JOHNSON PUMP
AN SPX BRAND

F5B-9 Impeller pump
Art. No. 10-13236-01

Part no.	Description GB	Position	Quantity
01-24553	PUMPBODY F5B-9 (VPoA)	1	1
01-35856	HOSE CONNECTION F5B-9 (VPoA)	2	2
08-1027B-01	IMPELLER VP825940	3	1
01-35859	BEARING HOUSING F5B-9 (VPoA)	4	1
01-13235-1	PULLEY F5B-9 (VPoA)	5	1
0.2233.001	LIP SEAL 16X28X7 DPSM	6	1
0.3431.753	BALL BEARING 6006 2RS1/VT90 ST	7	1
0.0141.501	SCREW M5X12 ISO4017 BRASS	8	4
0.2173.476	O-RING 59.6X2.4 SS1586 NBR70	9	1
0.2172.016	O-RING 26.7X1.78 BS1806 NBR70	10	2

F5B-9 Impeller pump
Art. No. 10-13236-02

Part No.	Description GB	Position	Quantity
01-24553	PUMPBODY F5B-9 (VPoA)	1	1
01-35856	HOSE CONNECTION F5B-9 (VPoA)	2	2
08-1027B-01	IMPELLER VP825940	3	1
01-35859	BEARING HOUSING F5B-9 (VPoA)	4	1
01-13235-2	PULLEY F5B-9 (VPoA)	5	1
0.2233.001	LIP SEAL 16X28X7 DPSM	6	1
0.3431.753	BALL BEARING 6006 2RS1/VT90 ST	7	1
0.0141.501	SCREW M5X12 ISO4017 BRASS	8	4
0.2173.476	O-RING 59.6X2.4 SS1586 NBR70	9	1
0.2172.016	O-RING 26.7X1.78 BS1806 NBR70	10	2

JOHNSON PUMP
AN SPX BRAND

The product, i.e. concept, design and construction, is the property of SPX Johnson Pump Marine AB

10-13236 pump F5B-9

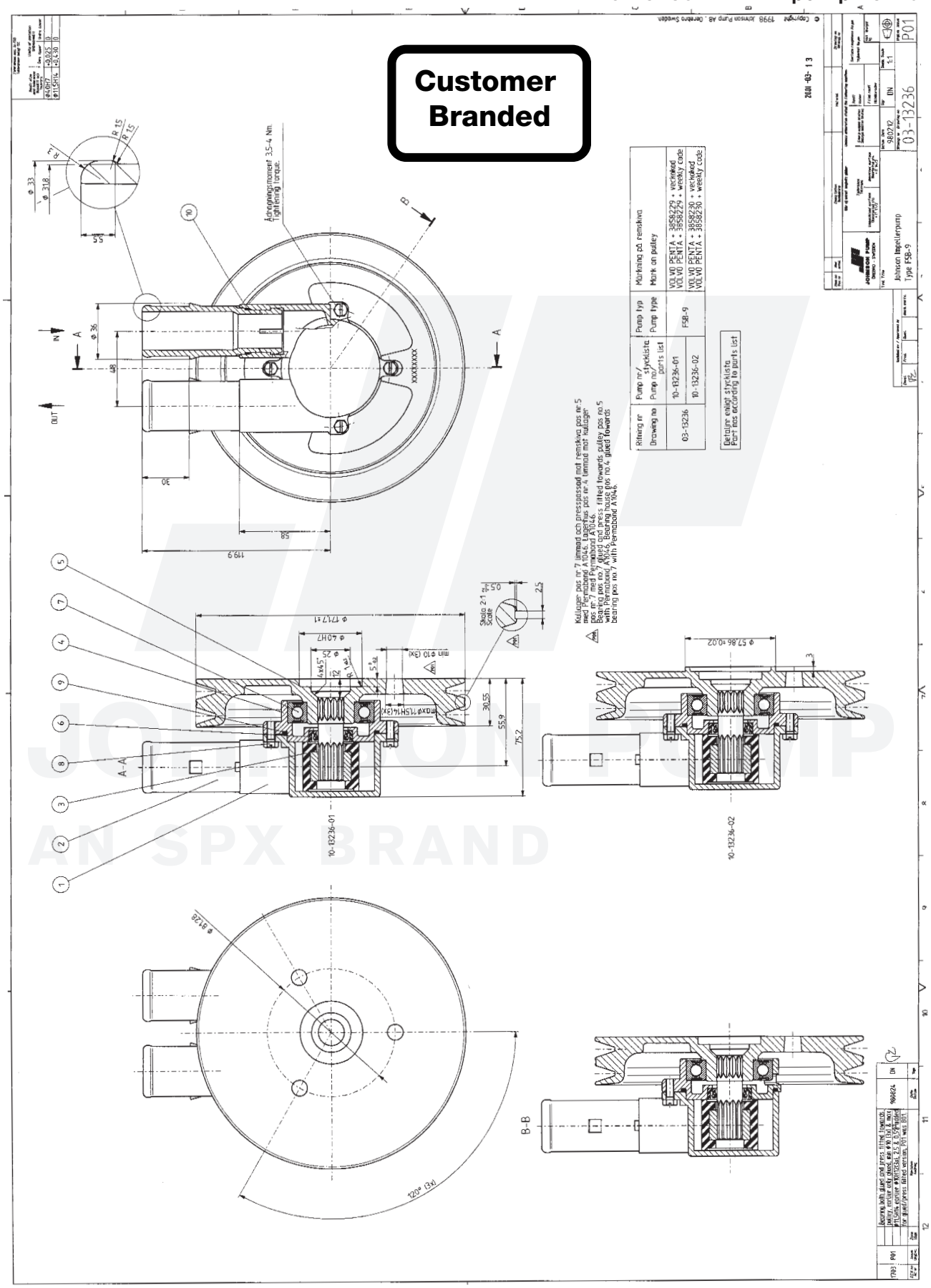

JOHNSON PUMP
AN SPX BRAND

F5B-9 Impeller pump
Art. No. 10-13353-01

Part no.	Description GB	Position	Quantity
01-24665-1	PUMPBODY F5B-9 (VPoA)	1	1
08-1027B-11	IMPELLER VP3862465	2	1
01-35985	BEARING HOUSING F5B-9 (VPoA)	3	1
01-13222-1	PULLEY F5B-9 (VPoA)	4	1
0.2173.476	O-RING 54.6X2.4 NBR70	5	1
0.2233.001	LIP SEAL 16X28X7 DPSM	6	1
0.3431.753	BALL BEARING 6006 2RS1/VT90 ST	7	1
0.0371.058	RETAIN. RING BORE D55 DIN 472 SPRST	8	1
0.0141.501	SCREW M5X12 ISO4017 BRASS	9	4

The product, i.e. concept, design and construction, is the property of SPX Johnson Pump Marine AB

10-13353 pump F5B-9

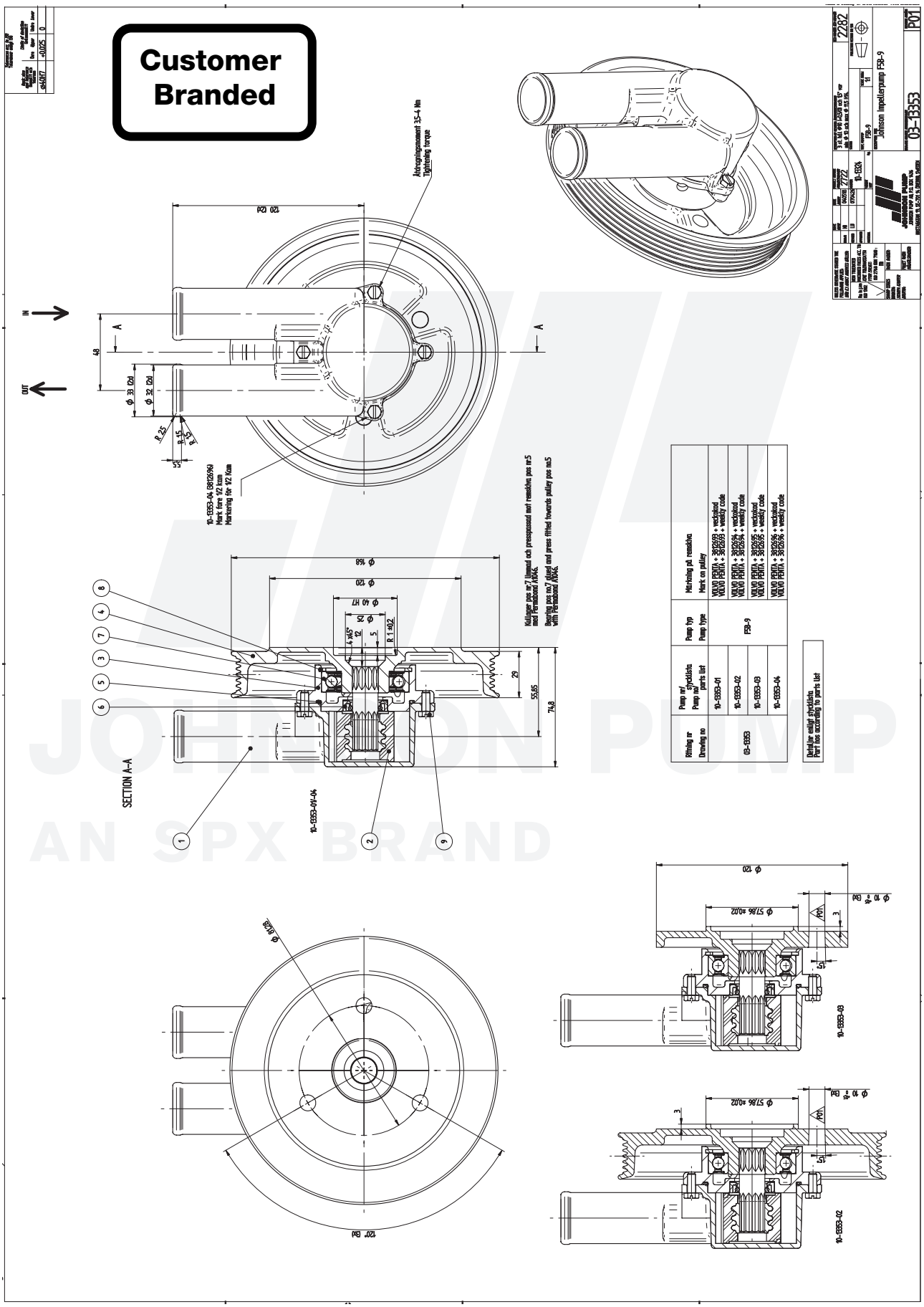

JOHNSON PUMP
AN SPX BRAND

F5B-9 Impeller pump
Art. No. 10-13354-01

Part no.	Description GB	Position	Quantity
01-24665-1	PUMPBODY F5B-9 (VPoA)	1	1
08-1027B-11	IMPELLER VP3862465	2	1
01-35985	BEARING HOUSING F5B-9 (VPoA)	3	1
01-13235-1	PULLEY F5B-9 (VPoA)	4	1
0.2173.476	O-RING 54.6X2.4 NBR70	5	1
0.2233.001	LIP SEAL 16X28X7 DPSM	6	1
0.3431.753	BALL BEARING 6006 2RS1/VT90 ST	7	1
0.0371.058	RETAIN. RING BORE D55 DIN 472 SPRST	8	1
0.0141.501	SCREW M5X12 ISO4017 BRASS	9	4

The product, i.e. concept, design and construction, is the property of SPX Johnson Pump Marine AB

10-13354 pump F5B-9

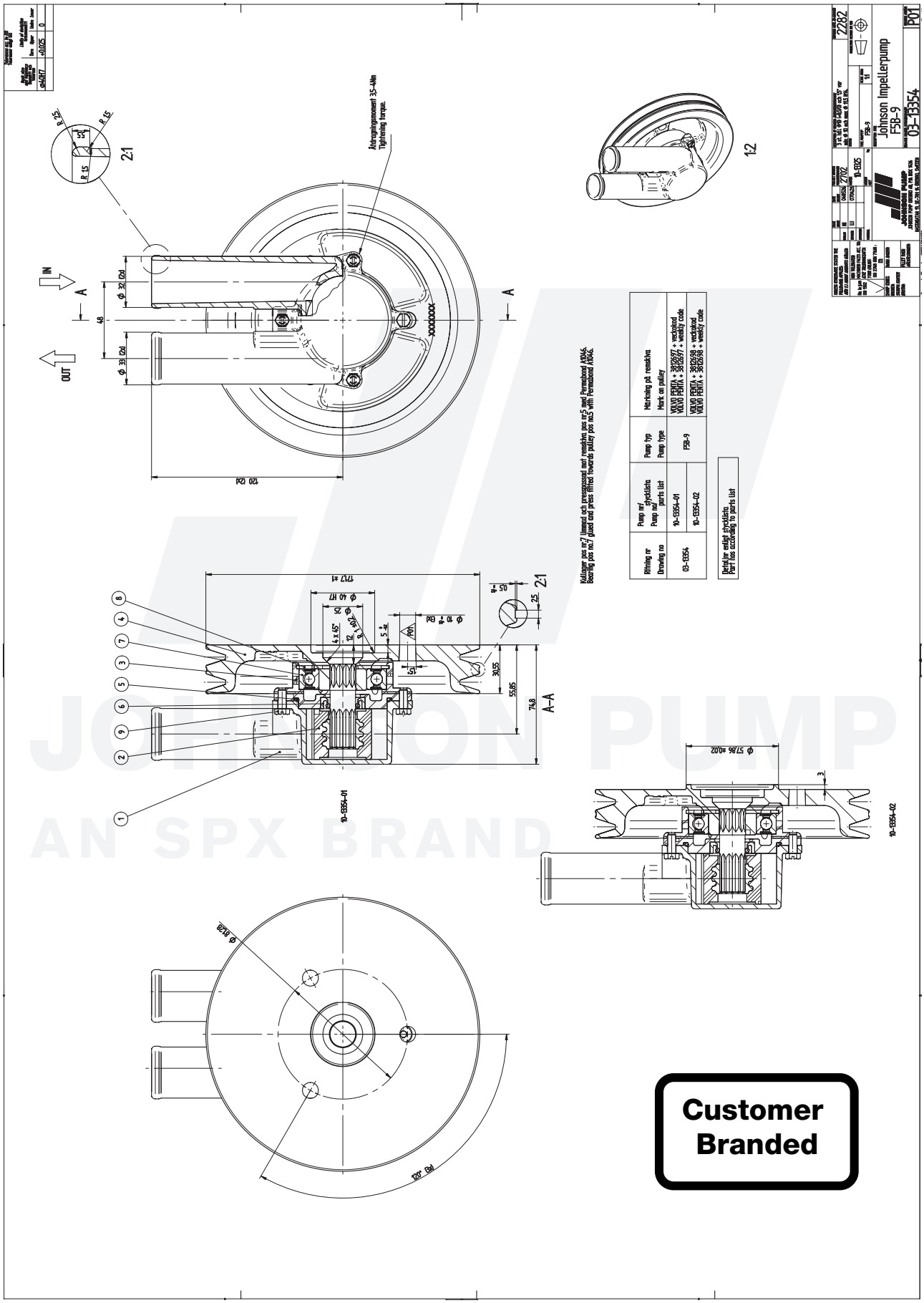

Customer Branded

F5B-9 Impeller pump
Art. No. 10-13468-01

Part no.	Description GB	Position	Quantity
01-24665-1	PUMPBODY F5B-9 (VPoA)	1	1
08-1027B-110	IMPELLER VP21213650	2	1
01-35985	BEARING HOUSING F5B-9 (VPoA)	3	1
01-13222-1	PULLEY F5B-9 (VPoA)	4	1
0.2173.476	O-RING 54.6X2.4 NBR70	5	1
0.2233.001	LIP SEAL 16X28X7 DPSM	6	1
0.3431.753	BALL BEARING 6006 2RS1/VT90 ST	7	1
0.0371.058	RETAIN. RING BORE D55 DIN 472 SPRST	8	1
0.0141.501	SCREW M5X12 ISO4017 BRASS	9	4

The product, i.e. concept, design and construction, is the property of SPX Johnson Pump Marine AB

10-13468 pump F5B-9

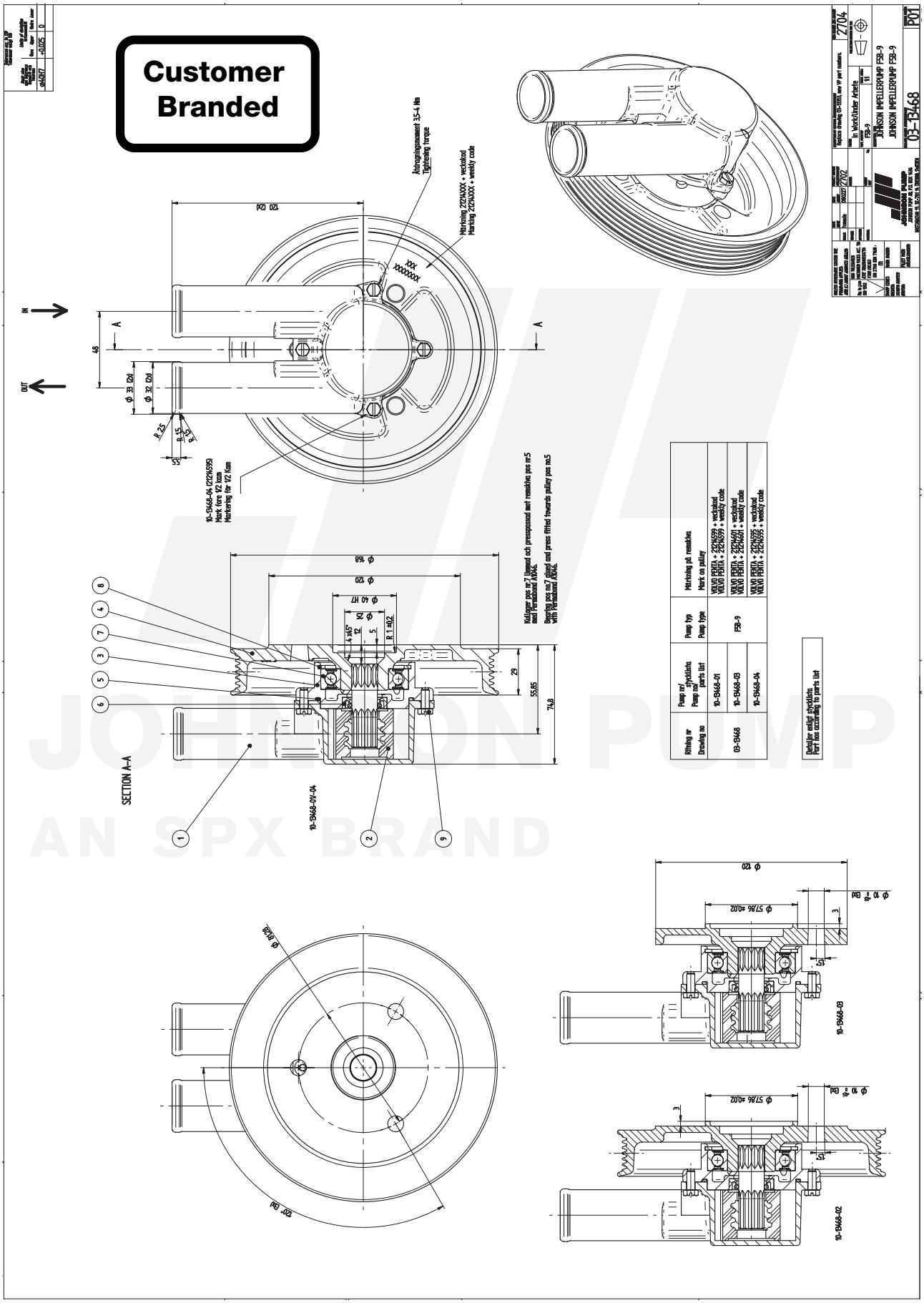

F5B-9 Impeller pump
Art. No. 10-13469-01

Part no.	Description GB	Position	Quantity
01-24665-1	PUMPBODY F5B-9 (VPoA)	1	1
08-1027B-110	IMPELLER VP21213650	2	1
01-35985	BEARING HOUSING F5B-9 (VPoA)	3	1
01-13235-1	PULLEY F5B-9 (VPoA)	4	1
0.2173.476	O-RING 54.6X2.4 NBR70	5	1
0.2233.001	LIP SEAL 16X28X7 DPSM	6	1
0.3431.753	BALL BEARING 6006 2RS1/VT90 ST	7	1
0.0371.058	RETAIN. RING BORE D55 DIN 472 SPRST	8	1
0.0141.501	SCREW M5X12 ISO4017 BRASS	9	4

The product, i.e. concept, design and construction, is the property of SPX Johnson Pump Marine AB

10-13469 pump F5B-9

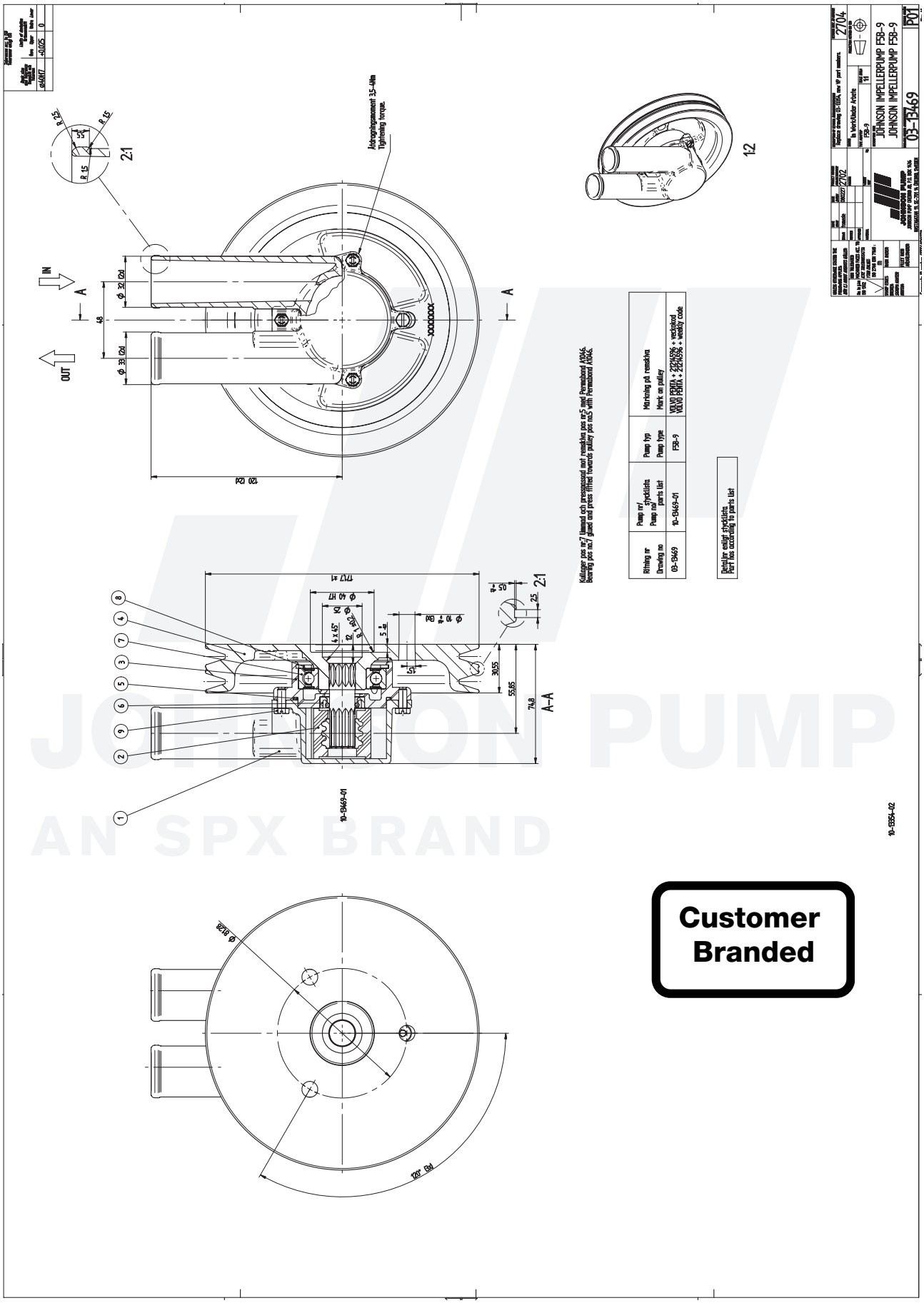

Customer Branded

JOHNSON PUMP
AN SPX BRAND

10-24076 pump F5B-9

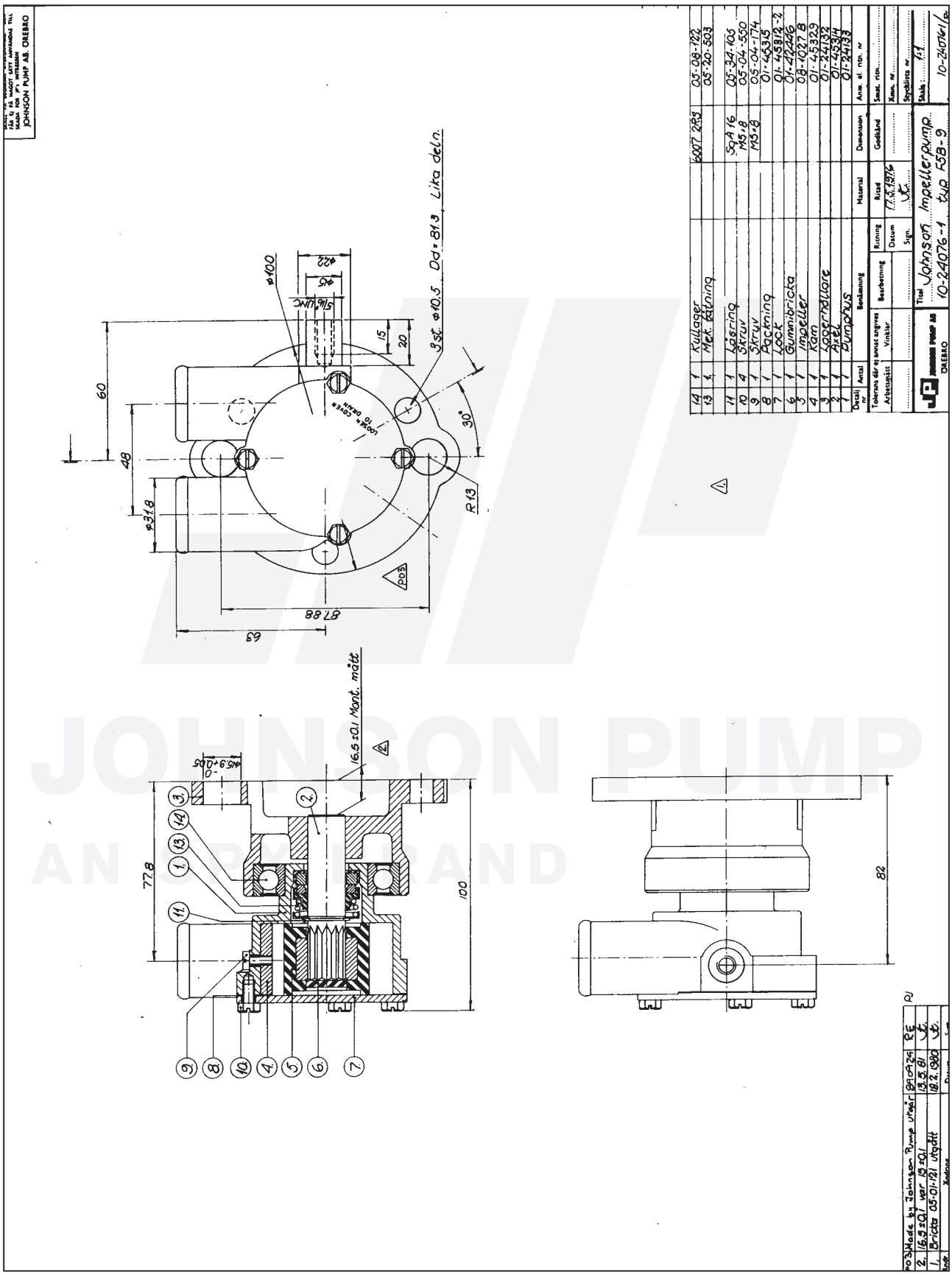

JOHNSON PUMP
AN ITT BRAND

The product, i.e. concept, design and construction, is the property of SPX Johnson Pump Marine AB

JOHNSON PUMP
AN SPX BRAND

F5B-9 Impeller pump
Art. No. 10-24225-1

Part no.	Description GB	Position	Quantity
01-24229	BODY F5B-9	1	1
01-45329	CAM 1/1 F5B-9	3	1
01-45312-1	ENDCOVER F5B/F6B-9	4	1
08-1027B	IMPELLER	5	1
01-45315	GASKET F5B/F6B-9	6	1
04-46407-01	CARRIER COMPLETE	7	1
0.2233.252	LIP SEAL 16X28X7 B	8	1
0.3431.742	BALL BEARING 6203 2 RS1 ST	9	2
0.2173.402	O-RING 15.3X2.4 SS1586 NBR70	10	1
0.0141.502	SCREW M5X8 DIN933SLOTTED BRASS	11	4
0.0279.033	SCREW M5X8 ISO1207 BRASS	12	1
01-45680	WASHER F5B/F6B/F7B	13	1
01-45953	HOSE BUSHING F5/F6B-9	14	2

The product, i.e. concept, design and construction, is the property of SPX Johnson Pump Marine AB

10-24225 pump F5B-9

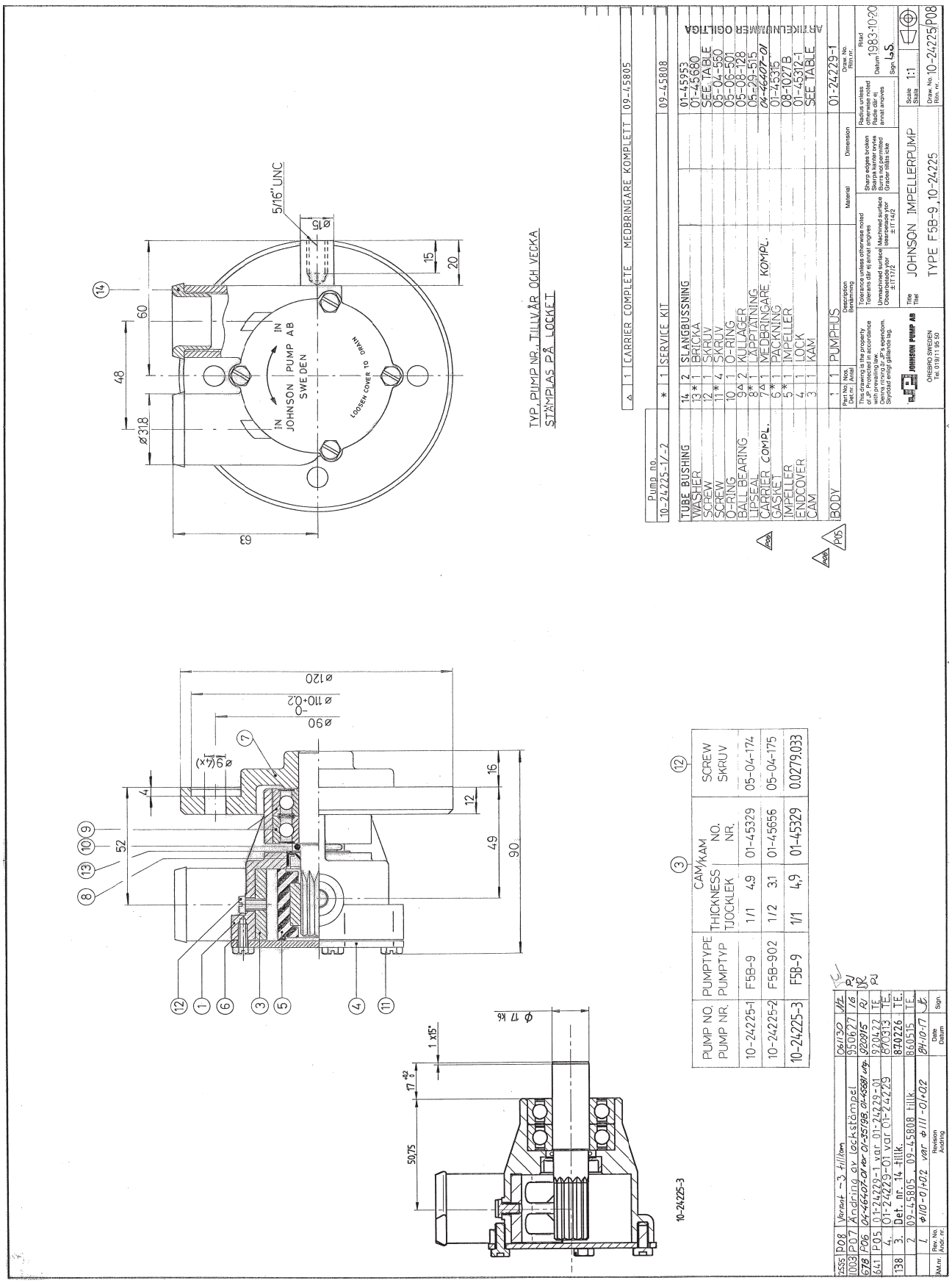

F5B-9 Impeller pump
Art. No. 10-24228-1

Part no.	Description GB	Position	Quantity
01-24229	BODY F5B-9	1	1
01-45329	CAM 1/1 F5B-9	3	1
01-45312-1	ENDCOVER F5B/F6B-9	4	1
08-1027B	IMPELLER	5	1
01-45315	GASKET F5B/F6B-9	6	1
04-46408-01	CARRIER COMPLETE	7	1
0.2233.001	LIP SEAL 16X28X7 DPSM	8	1
0.3431.742	BALL BEARING 6203 2 RS1 ST	9	2
0.2173.402	O-RING 15.3X2.4 SS1586 NBR70	10	1
0.0141.502	SCREW M5X8 DIN933SLOTTED BRASS	11	4
0.0279.033	SCREW M5X8 ISO1207 BRASS	12	1
01-45680	WASHER F5B/F6B/F7B	13	1
01-45953	HOSE BUSHING F5/F6B-9	15	2

The product, i.e. concept, design and construction, is the property of SPX Johnson Pump Marine AB

10-24228 pump F5B-9

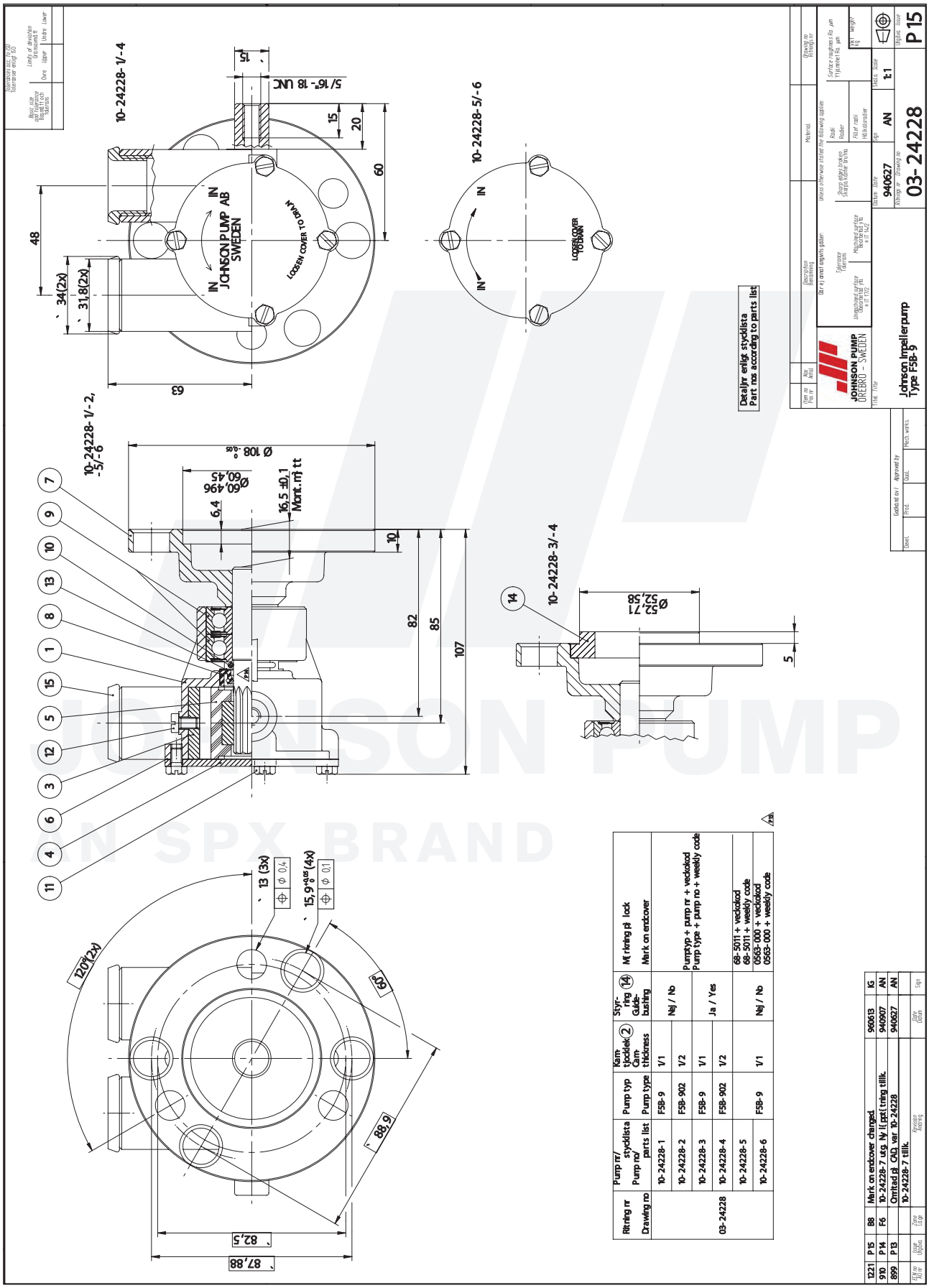

Ritning nr / Drawing no	Pump nr/ stycklista / Pump no/ parts list	Pump typ / Pump type	Kam-tjocklek / Cam-thickness	Styr-ring (14) / Guide-bushing	Märkning på lock / Mark on endcover
03-24228	10-24228-1	F5B-9	1/1	Nej / No	Pumptyp + pump nr + veckokod Pump type + pump no + weekly code
	10-24228-2	F5B-902	1/2		
	10-24228-3	F5B-9	1/1	Ja / Yes	
	10-24228-4	F5B-902	1/2		
	10-24228-5	F5B-9	1/1	Nej / No	68-5011 + veckokod 68-5011 + weekly code 0563-000 + veckokod 0563-000 + weekly code
	10-24228-6				

JOHNSON PUMP
AN SPX BRAND

F5B-9 Impeller pump
Art. No. 10-24230-2

Part no.	Description GB	Position	Quantity
01-24229	BODY F5B-9	1	1
01-45656	CAM 1/2 F5B-9	3	1
01-45312-1	ENDCOVER F5B/F6B-9	4	1
08-1027B	IMPELLER	5	1
01-45315	GASKET F5B/F6B-9	6	1
04-46406-01	CARRIER COMPLETE	7	1
0.2233.252	LIP SEAL 16X28X7 B	8	1
0.3431.742	BALL BEARING 6203 2 RS1 ST	9	2
0.2173.402	O-RING 15.3X2.4 SS1586 NBR70	10	1
0.0141.502	SCREW M5X8 DIN933SLOTTED BRASS	11	4
0.0279.032	SCREW M5X7 ISO1207 BRASS	12	1
01-45680	WASHER F5B/F6B/F7B	13	1
01-35184	ADAPTOR F4B/F5B/F6B-9	14	1
0.0353.309	SPRINGWASH D8.2 DIN127 STZN	15	2
0.0257.036	HEX SOC HEAD SCR M8X20 ISO4762 8.8	16	2
01-45953	HOSE BUSHING F5/F6B-9	17	2

The product, i.e. concept, design and construction, is the property of SPX Johnson Pump Marine AB

10-24230 pump F5B-9

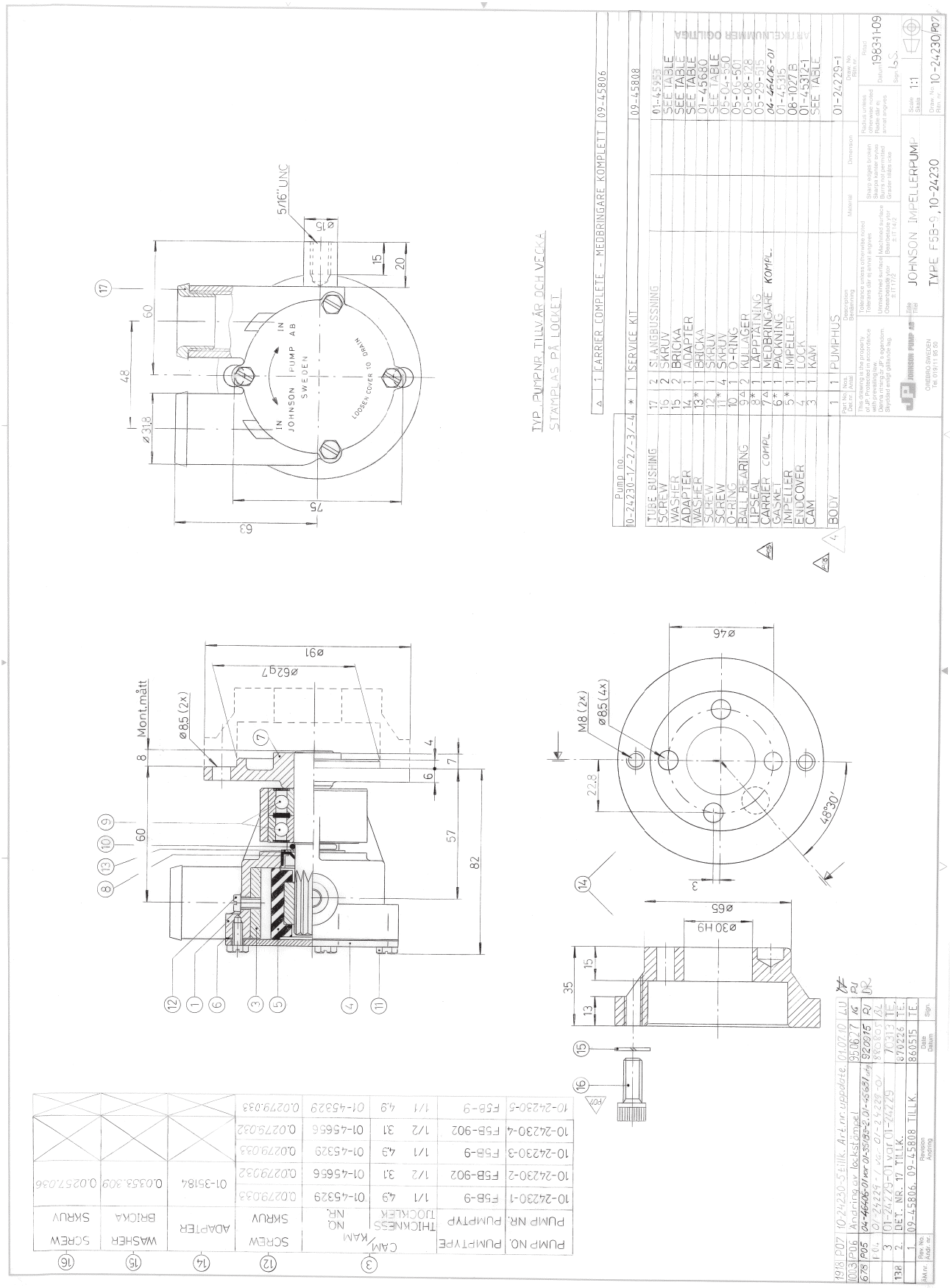
5/16" UNC
Ø15
15
20
17
60
48
Ø31,8
75
63
IN
JOHNSON PUMP AB
SWEDEN
IN
LOOSEN COVER 10 mm
TYP...PUMPNR. TILLV.ÅR OCH VECKA
STAMPLAS PÅ LOCKET
Pump no.
10-24230-1/-2/-3/-4
CARRIER COMPLETE - MEDBRINGARE KOMPLETT
09-45806
SERVICE KIT
09-45808
TUBE BUSHING 17 2 SLANGBUSSNING 01-45953
SCREW 16 2 SKRUV SEE TABLE
WASHER 15 2 BRICKA SEE TABLE
ADAPTER 14 1 ADAPTER SEE TABLE
WASHER 13* 1 BRICKA 01-45660
SCREW 12 1 SKRUV SEE TABLE
SCREW 11* 4 SKRUV 05-064-550
O-RING 10 1 O-RING 05-061-501
BALL BEARING 9 2 KULLAGER 05-081-728
LIPSEAL 8* 1 LÄPPTÄTNING 05-291-515
CARRIER COMPL. 7 1 MEDBRINGARE KOMPL. 04-46406-01
GASKET 6* 1 PACKNING 01-45315
IMPELLER 5* 1 IMPELLER 08-1027B
ENDCOVER 4 1 LOCK 01-45312-1
CAM 3 1 KAM SEE TABLE
BODY 1 1 PUMPHUS 01-24229-1
ÄR INKELNUMMER OGILTIGA
JOHNSON PUMP AB
ÖREBRO SWEDEN
Tel. 019/11 85 50
JOHNSON IMPELLERPUMP
TYPE F5B-9, 10-24230
Ø91
Ø62g7
Ø85 (2x)
Mont.mått
8
60
57
82
4
7
6
Ø46
M8 (2x)
Ø85 (4x)
22,8
48°30'
3
Ø65
Ø30 H9
35
13
15
1918 P07 10-24230-5 tillk. Art.nr. uppdate. 01.07.10 LW
10.03 P06 Ändring av lockstämpel 95.06.27 JG
6.78 P05 04-46406-01 ner 01-45631 ny 920915 PJ
11.04. 01-24229-1 ner 01-24229-0 960304 AL
3. 01-24229-01 ny 01-24229 970317 TE.
13.8 2. DET. NR. 17 TILLK. 870226 TE.
1. 09-45806, 09-45808 TILLK. 860515 TE.
Rev. No. Revision Ändring
Date Datum
Sign.
Rev. No. Rev. nr.
Rätt. nr.
Title Titel
Material
Description Benämning
Dimension
Part No. Nos. Del nr. Antal
Pump no.
Rätt. nr.
Rätt. nr.
Rätt. nr

10-24372 pump F5B-9

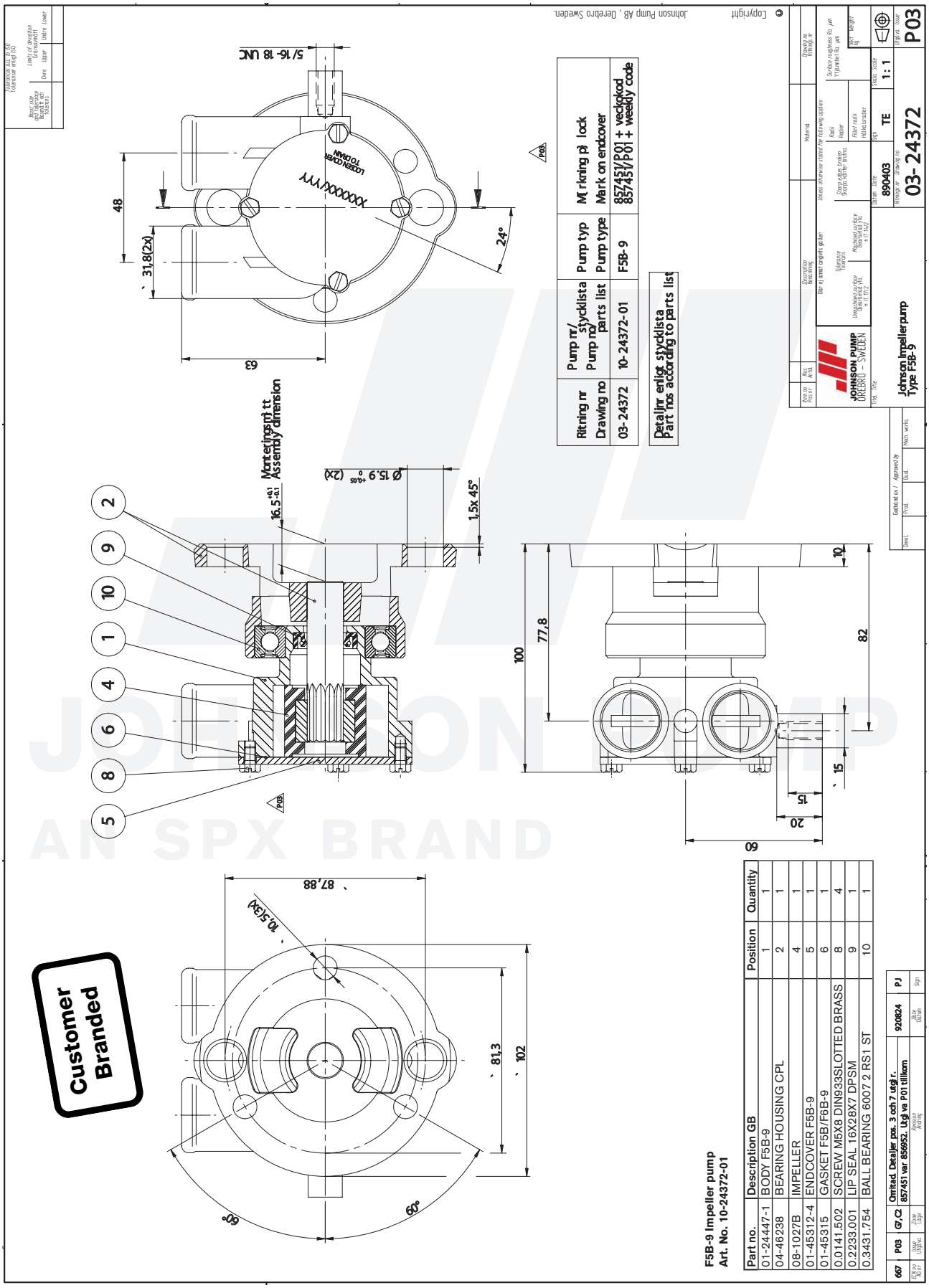

Part no.	Description GB	Position	Quantity
01-24447-1	BODY F5B-9	1	1
04-46238	BEARING HOUSING CPL	2	1
08-1027B	IMPELLER	4	1
01-45312-4	ENDCOVER F5B-9	5	1
01-45315	GASKET F5B/F6B-9	6	1
0.0141.502	SCREW M5X8 DIN933SLOTTED BRASS	8	4
0.2233.001	LIP SEAL 16X28X7 DPSM	9	1
0.3431.754	BALL BEARING 6007 2 RS1 ST	10	1

JOHNSON PUMP
AN SPX BRAND

The product, i.e. concept, design and construction, is the property of SPX Johnson Pump Marine AB

JOHNSON PUMP
AN SPX BRAND

F5B-9 Impeller pump
Art. No. 10-24461-01

Part no.	Description GB	Position	Quantity
01-24229	BODY F5B-9	1	1
01-45329	CAM 1/1 F5B-9	3	1
01-45312-1	ENDCOVER F5B/F6B-9	4	1
08-1027B	IMPELLER	5	1
01-45315	GASKET F5B/F6B-9	6	1
01-45681	SHAFT F5B/F6B-9	7	1
0.2233.252	LIP SEAL 16X28X7 B	8	1
0.3431.742	BALL BEARING 6203 2 RS1 ST	9	2
0.2173.402	O-RING 15.3X2.4 SS1586 NBR70	10	1
0.0141.502	SCREW M5X8 DIN933SLOTTED BRASS	11	4
0.0279.033	SCREW M5X8 ISO1207 BRASS	12	1
01-45680	WASHER F5B/F6B/F7B	13	1
01-45953	HOSE BUSHING F5/F6B-9	15	2
19-31-15401	CARRIER (ALASKA D)	16	1

The product, i.e. concept, design and construction, is the property of SPX Johnson Pump Marine AB

10-24461 pump F5B-9

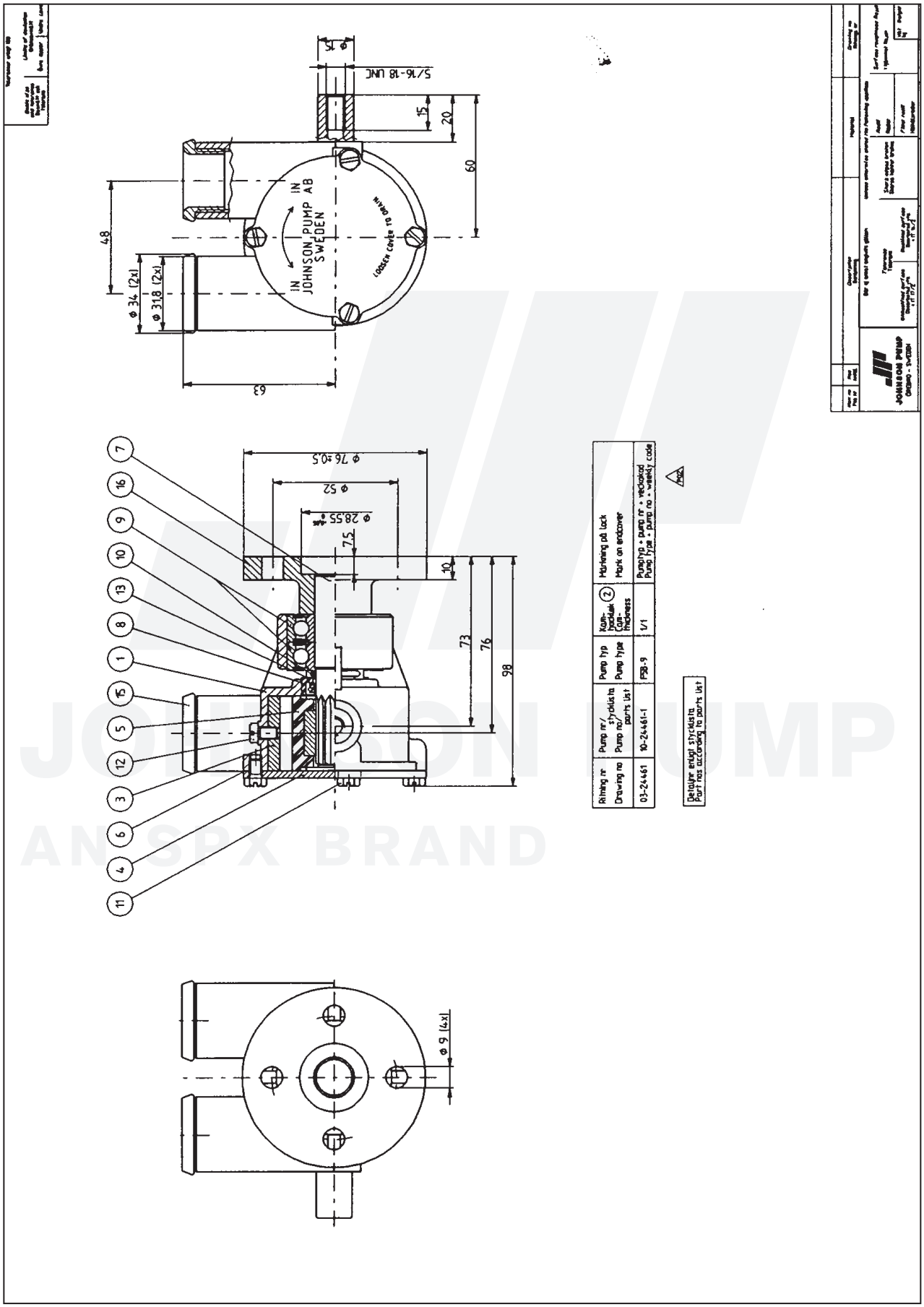

JOHNSON PUMP
AN SPX BRAND

F6B-9 Impeller pump
Art. No. 10-13356-01

Part no.	Description GB	Position	Quantity
01-13351-1	PUMPBODY F6B-9 (VPoA)	1	1
01-13368-1	PULLEY F6B-9 (VPoA)	2	1
08-812BT-11	IMPELLER VP3584350	3	1
01-35985	BEARING HOUSING F5B-9 (VPoA)	4	1
0.2233.001	LIP SEAL 16X28X7 DPSM	5	1
0.3431.753	BALL BEARING 6006 2RS1/VT90 ST	6	1
0.0141.504	SCREW M5X40 DIN931 SLOTTED	7	4
0.2173.474	O-RING 4.1X1.6 SS1586 NBR70	8	4
0.2173.476	O-RING 54.6X2.4 NBR70	9	1
0.0371.058	RETAIN. RING BORE D55 DIN 472 SPRST	10	1
01-47129	SUPPORT BUSH 20X8 26 RUBBER	11	1

The product, i.e. concept, design and construction, is the property of SPX Johnson Pump Marine AB

10-13356 pump F6B-9

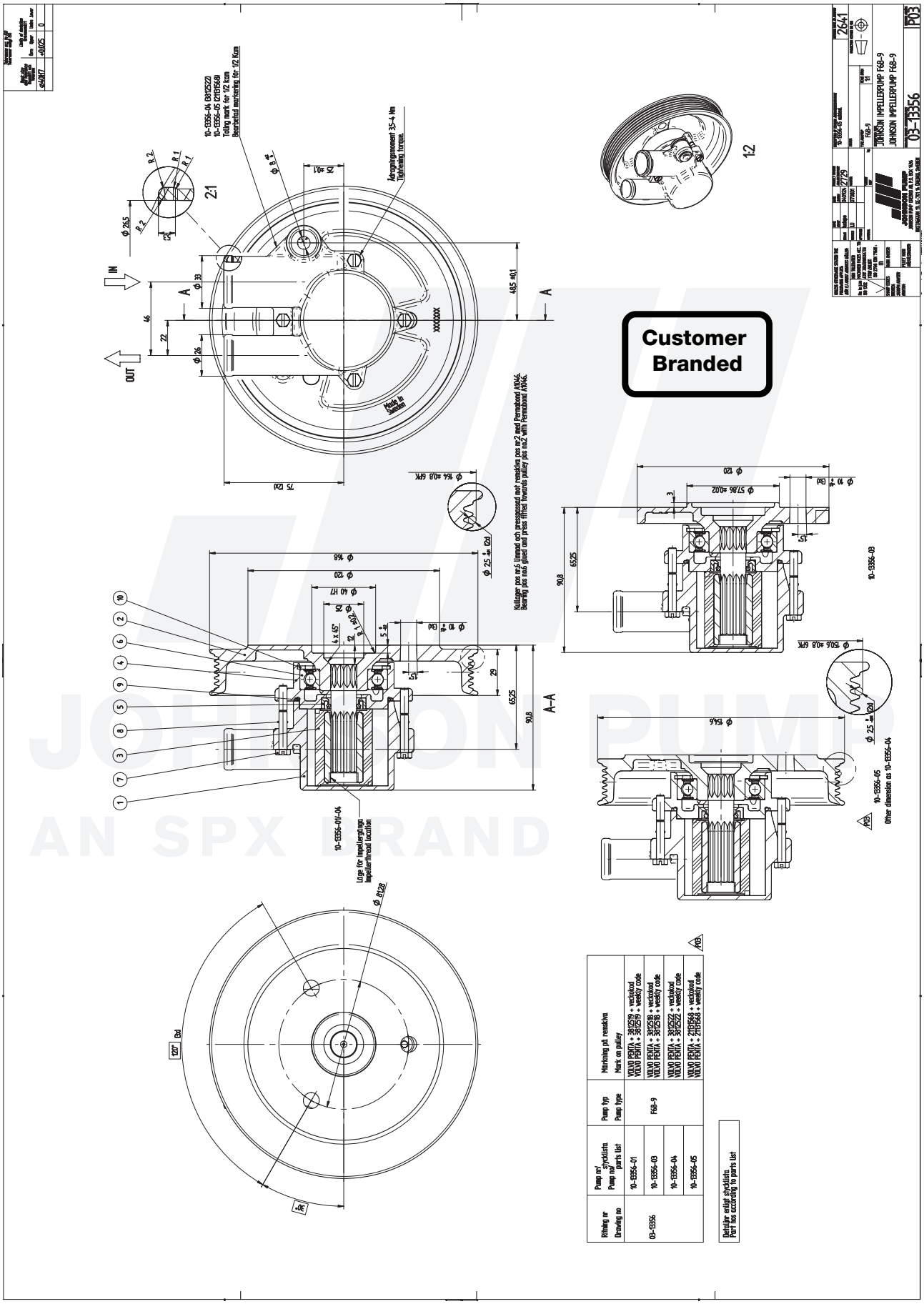

F6B-9 Impeller pump
Art. No. 10-13357-01

Part no.	Description GB	Position	Quantity
01-13351-1	PUMPBODY F6B-9 (VPoA)	1	1
01-13369-1	PULLEY F6B-9 (VPoA)	2	1
08-812BT-11	IMPELLER VP3584350	3	1
01-35985	BEARING HOUSING F5B-9 (VPoA)	4	1
0.2233.001	LIP SEAL 16X28X7 DPSM	5	1
0.3431.753	BALL BEARING 6006 2RS1/VT90 ST	6	1
0.0141.504	SCREW M5X40 DIN931 SLOTTED	7	4
0.2173.474	O-RING 4.1X1.6 SS1586 NBR70	8	4
0.2173.476	O-RING 54.6X2.4 NBR70	9	1
0.0371.058	RETAIN. RING BORE D55 DIN 472 SPRST	10	1
01-47129	SUPPORT BUSH 20X8 26 RUBBER	11	1

The product, i.e. concept, design and construction, is the property of SPX Johnson Pump Marine AB

10-13357 pump F6B-9

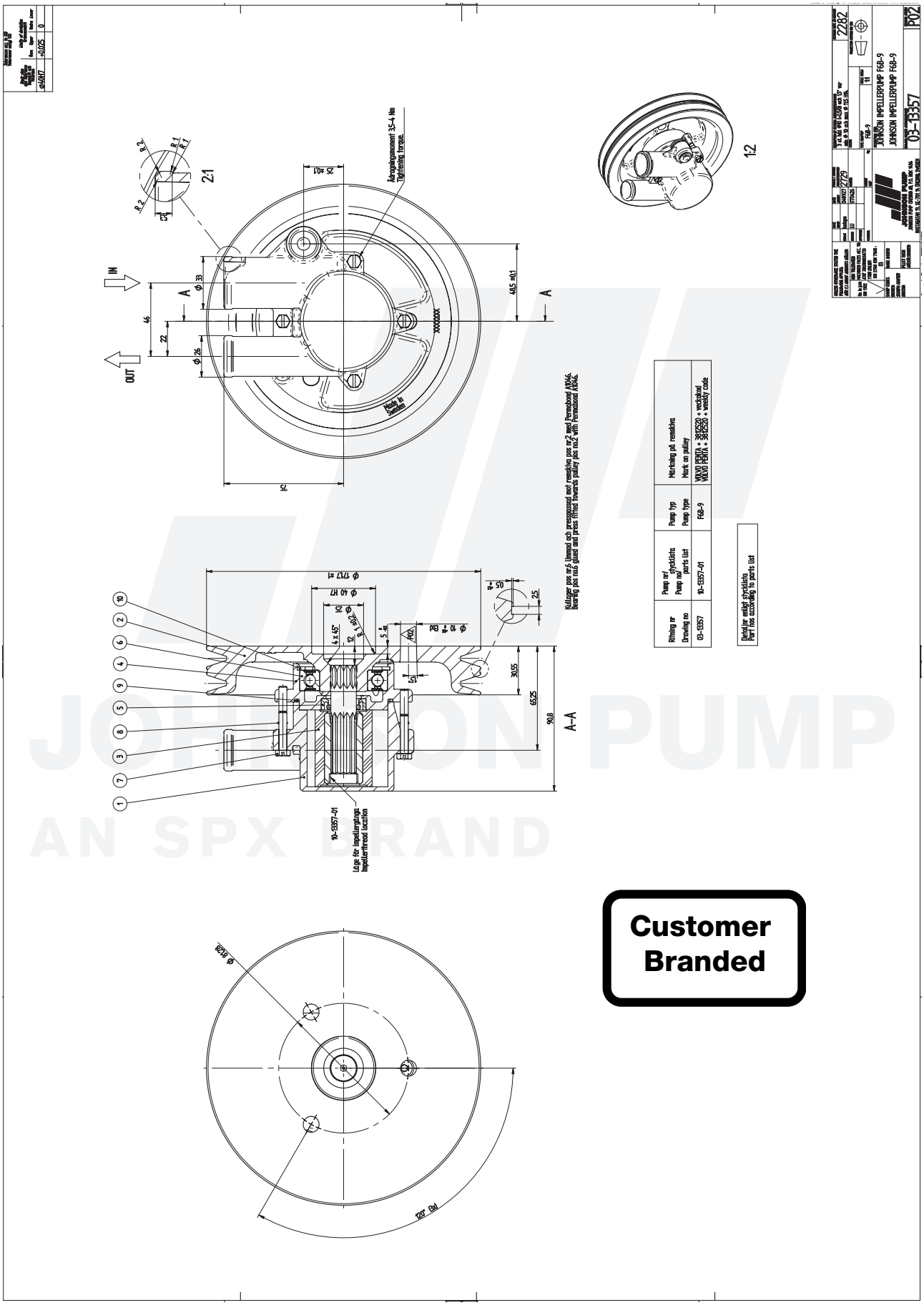

JOHNSON PUMP
AN SPX BRAND

Customer Branded

F6B-9 Impeller pump
Art. No. 10-13449-01

Part no.	Description GB	Position	Quantity
01-13330-1	BODY F6B-9	1	1
01-36007	SHAFT F6B-9	2	1
01-46556-3	END COVER F6B-9	3	1
01-36009	PULLEY	4	1
01-36008	PLATE	5	1
0.3431.779	BALL BEARING 6304-2RSH	6	1
0.3431.742	BALL BEARING 6203 2 RS1 ST	7	1
0.2230.015	V-RING 15.5-17.5 NBR/65SH	8	1
0.2233.001	LIP SEAL 16X28X7 DPSM	9	1
0.0141.505	SCREW M5X8 ISO4017 (A2) SLOTTED	10	4
08-812BT-01	IMPELLER VP3595485	11	1
0.2173.475	O-RING 57.6X2.4 SS1586 NBR70	12	1
0.0633.715	PLUG TYPE 410060 D36.4MM DBI	0	2

The product, i.e. concept, design and construction, is the property of SPX Johnson Pump Marine AB

10-13449 pump F6B-9

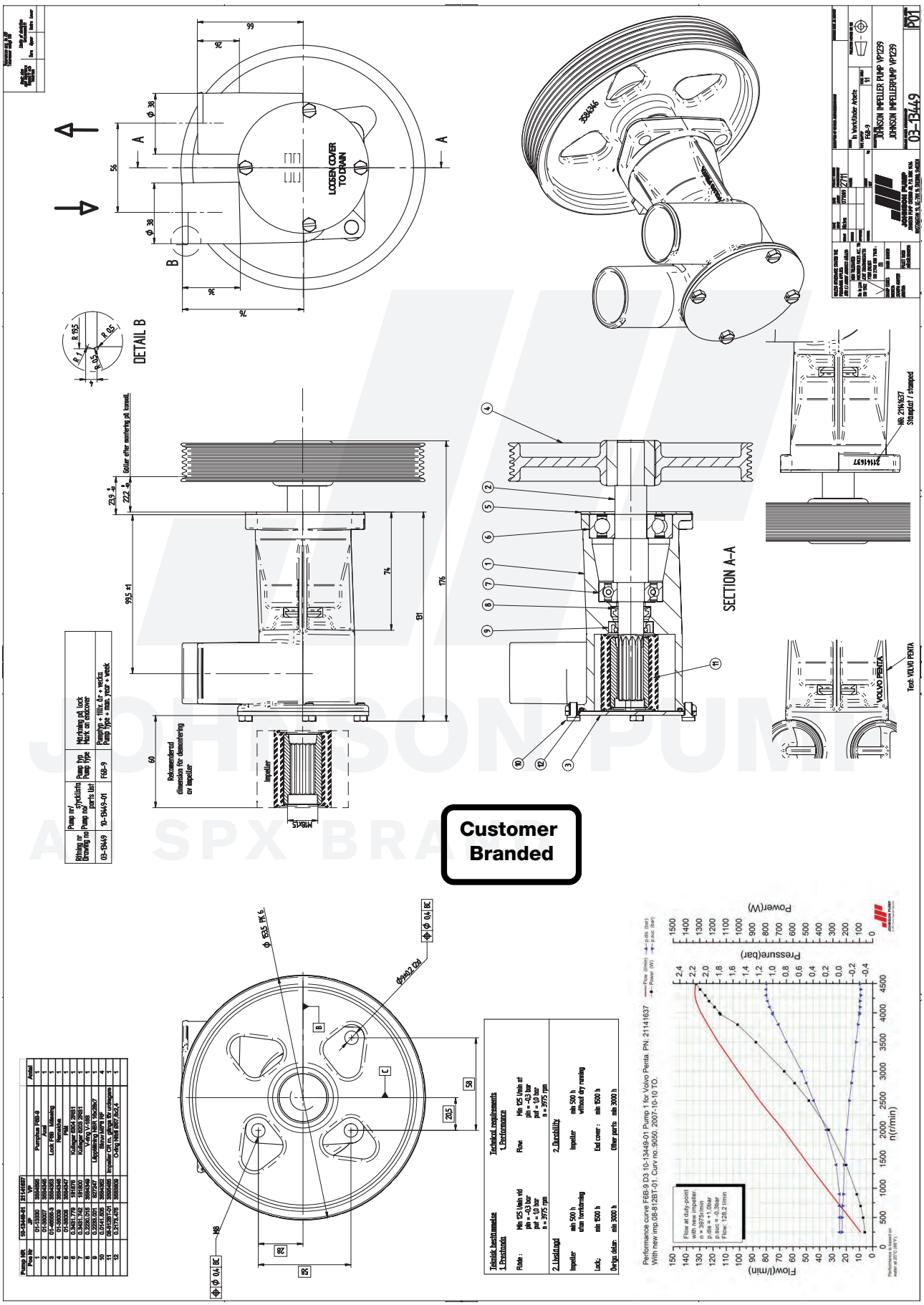

F6B-9 Impeller pump
Art. No. 10-13470-01

Part no.	Description GB	Position	Quantity
01-13351-1	PUMPBODY F6B-9 (VPoA)	1	1
01-13368-1	PULLEY F6B-9 (VPoA)	2	1
08-812B-110	IMPELLER VP21212794	3	1
01-35985	BEARING HOUSING F5B-9 (VPoA)	4	1
0.2233.001	LIP SEAL 16X28X7 DPSM	5	1
0.3431.753	BALL BEARING 6006 2RS1/VT90 ST	6	1
0.0141.504	SCREW M5X40 DIN931 SLOTTED	7	4
0.2173.474	O-RING 4.1X1.6 SS1586 NBR70	8	4
0.2173.476	O-RING 54.6X2.4 NBR70	9	1
0.0371.058	RETAIN. RING BORE D55 DIN 472 SPRST	10	1
01-47129	SUPPORT BUSH 20X8 26 RUBBER	11	1

The product, i.e. concept, design and construction, is the property of SPX Johnson Pump Marine AB

10-13470 pump F6B-9

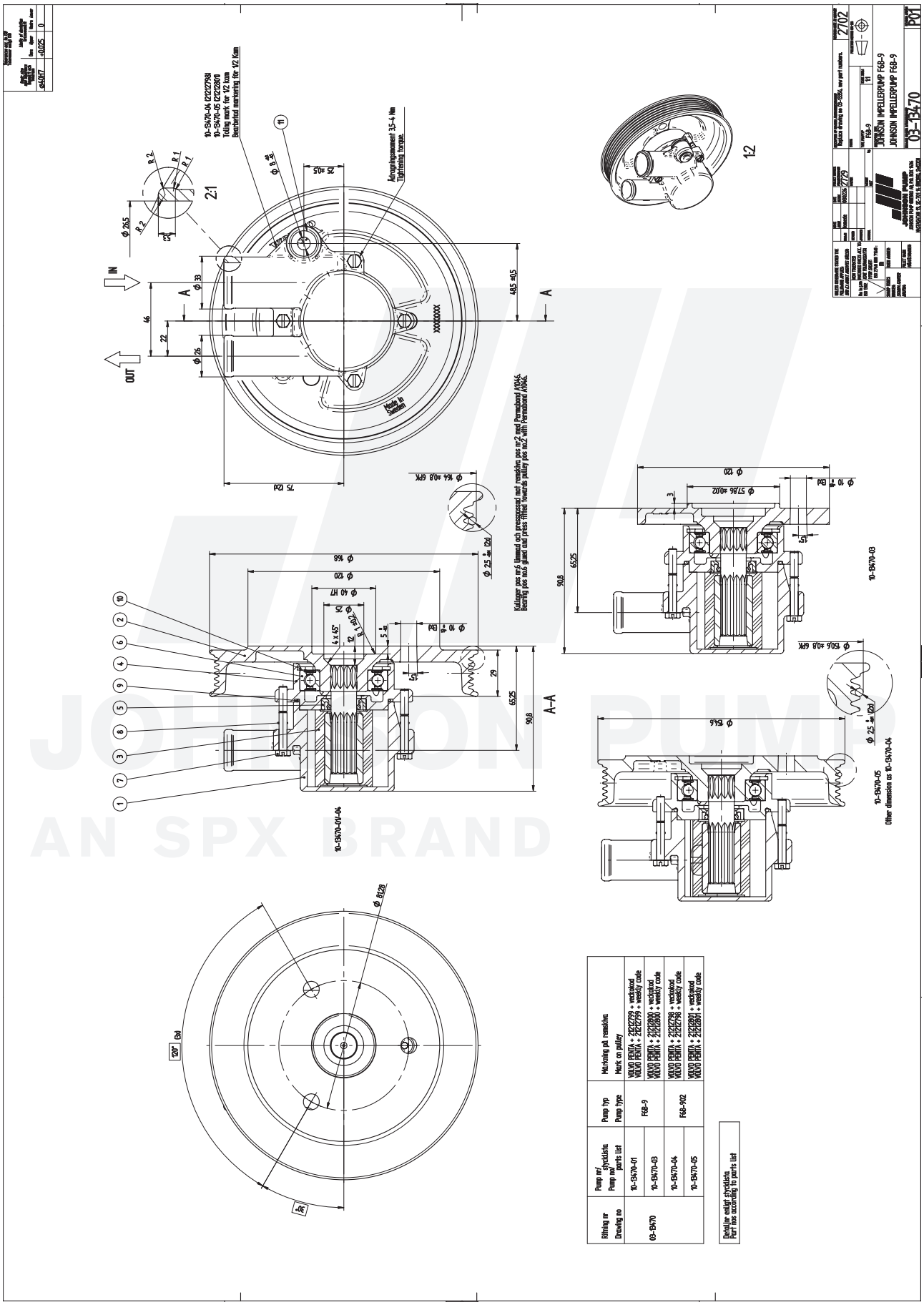

JOHNSON PUMP
AN SPX BRAND

F6B-9 Impeller pump
Art. No. 10-24232-1

Part no.	Description GB	Position	Quantity
01-24231-1	BODY F6B-9	1	1
01-45670	CAM 1/1 F6B-9	2	1
01-45312-1	ENDCOVER F5B/F6B-9	3	1
08-812B-1	IMPELLER	4	1
01-45315	GASKET F5B/F6B-9	5	1
04-46408-01	CARRIER COMPLETE	6	1
0.2233.001	LIP SEAL 16X28X7 DPSM	7	1
0.3431.742	BALL BEARING 6203 2 RS1 ST	8	2
0.2173.402	O-RING 15.3X2.4 SS1586 NBR70	9	1
0.0141.502	SCREW M5X8 DIN933SLOTTED BRASS	10	4
0.0279.033	SCREW M5X8 ISO1207 BRASS	11	1
01-45680	WASHER F5B/F6B/F7B	12	1
01-45953	HOSE BUSHING F5/F6B-9	13	2

The product, i.e. concept, design and construction, is the property of SPX Johnson Pump Marine AB

10-24232 pump F6B-9

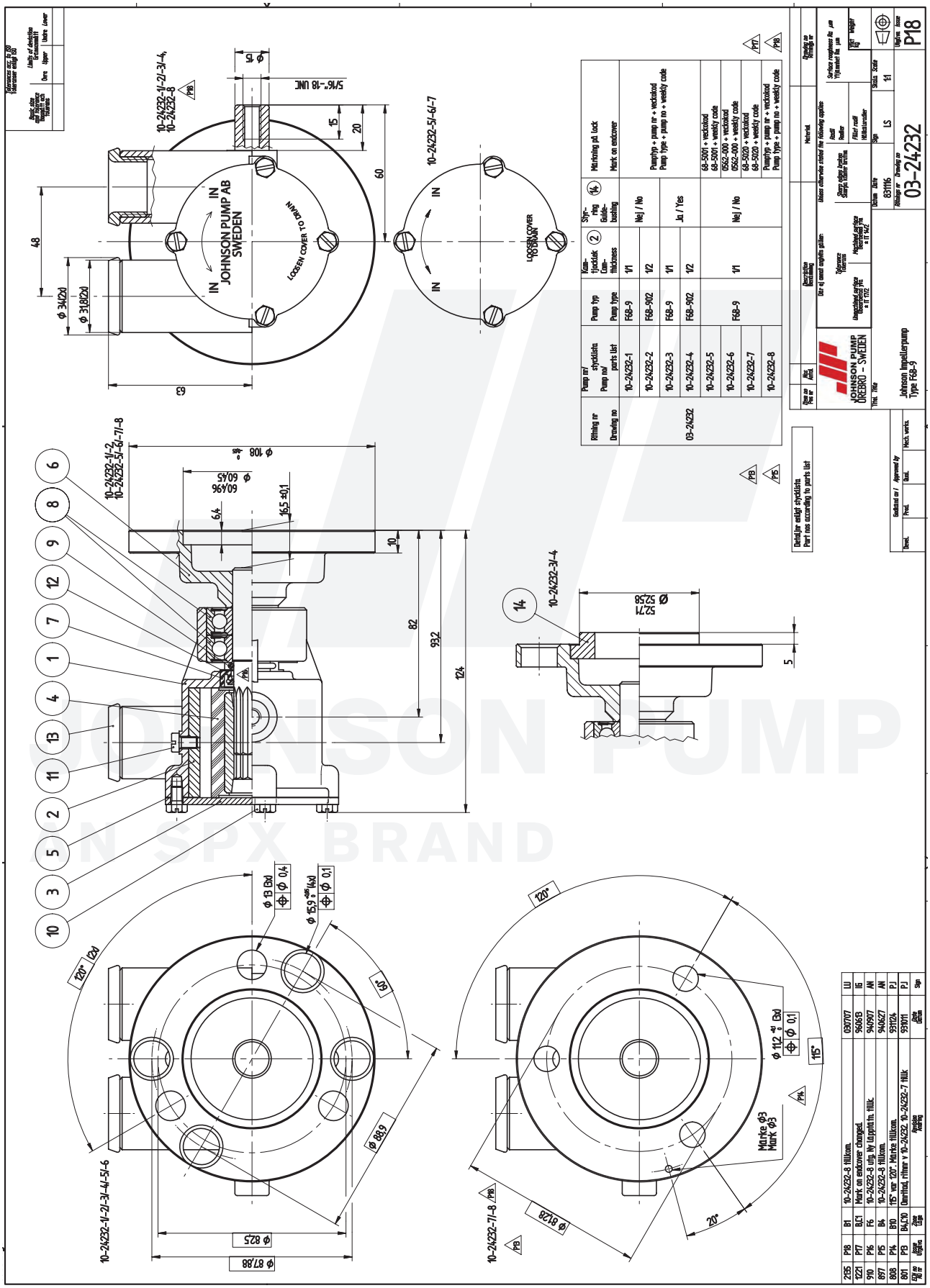

F6B-9 Impeller pump
Art. No. 10-24302-01

Part no.	Description GB	Position	Quantity
01-24231-1	BODY F6B-9	1	1
01-45681	SHAFT F5B/F6B-9	2	1
01-45670	CAM 1/1 F6B-9	3	1
01-45312-1	ENDCOVER F5B/F6B-9	4	1
08-812B	IMPELLER F6B-9	5	1
01-45315	GASKET F5B/F6B-9	6	1
01-35274	CARRIER F6B-9	7	1
0.2233.252	LIP SEAL 16X28X7 B	8	1
0.3431.742	BALL BEARING 6203 2 RS1 ST	9	2
0.2173.402	O-RING 15.3X2.4 SS1586 NBR70	10	1
0.0141.502	SCREW M5X8 DIN933SLOTTED BRASS	11	4
0.0279.033	SCREW M5X8 ISO1207 BRASS	12	1
01-45680	WASHER F5B/F6B/F7B	13	1
01-45953	HOSE BUSHING F5/F6B-9	14	2

The product, i.e. concept, design and construction, is the property of SPX Johnson Pump Marine AB

10-24302 pump F6B-9

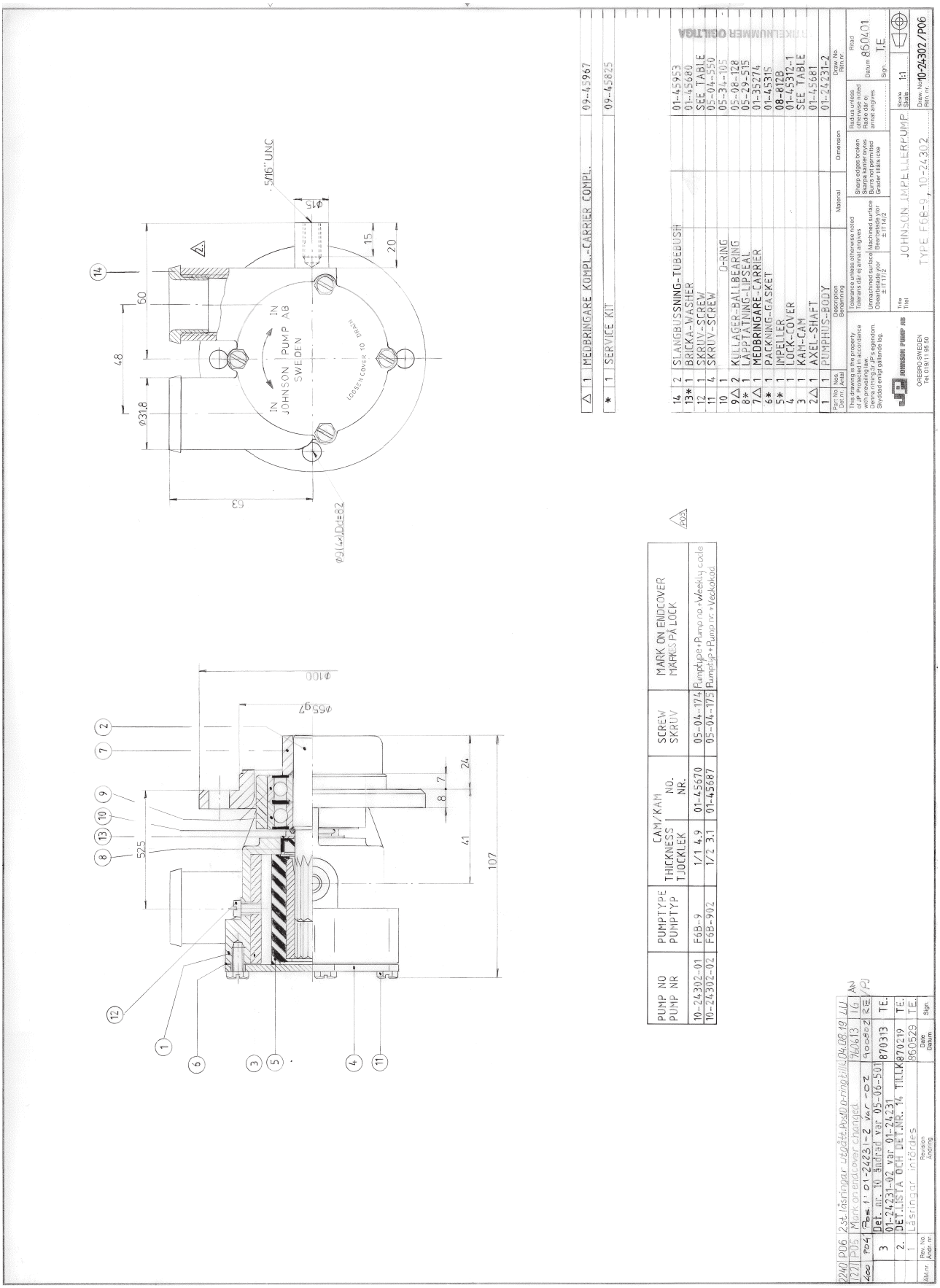

F6B-9 Impeller pump
Art. No. 10-24316-1

Part no.	Description GB	Position	Quantity
01-24231-1	BODY F6B-9	1	1
01-45681	SHAFT F5B/F6B-9	2	1
01-45670	CAM 1/1 F6B-9	3	1
01-45312-1	ENDCOVER F5B/F6B-9	4	1
08-812B	IMPELLER F6B-9	5	1
01-45315	GASKET F5B/F6B-9	6	1
01-35283	CARRIER F6B-9	7	1
0.2233.252	LIP SEAL 16X28X7 B	8	1
0.3431.742	BALL BEARING 6203 2 RS1 ST	9	2
0.2173.402	O-RING 15.3X2.4 SS1586 NBR70	10	1
0.0141.502	SCREW M5X8 DIN933SLOTTED BRASS	11	4
0.0279.033	SCREW M5X8 ISO1207 BRASS	12	1
01-45680	WASHER F5B/F6B/F7B	13	1
01-45953	HOSE BUSHING F5/F6B-9	14	2

The product, i.e. concept, design and construction, is the property of SPX Johnson Pump Marine AB

10-24316 pump F6B-9

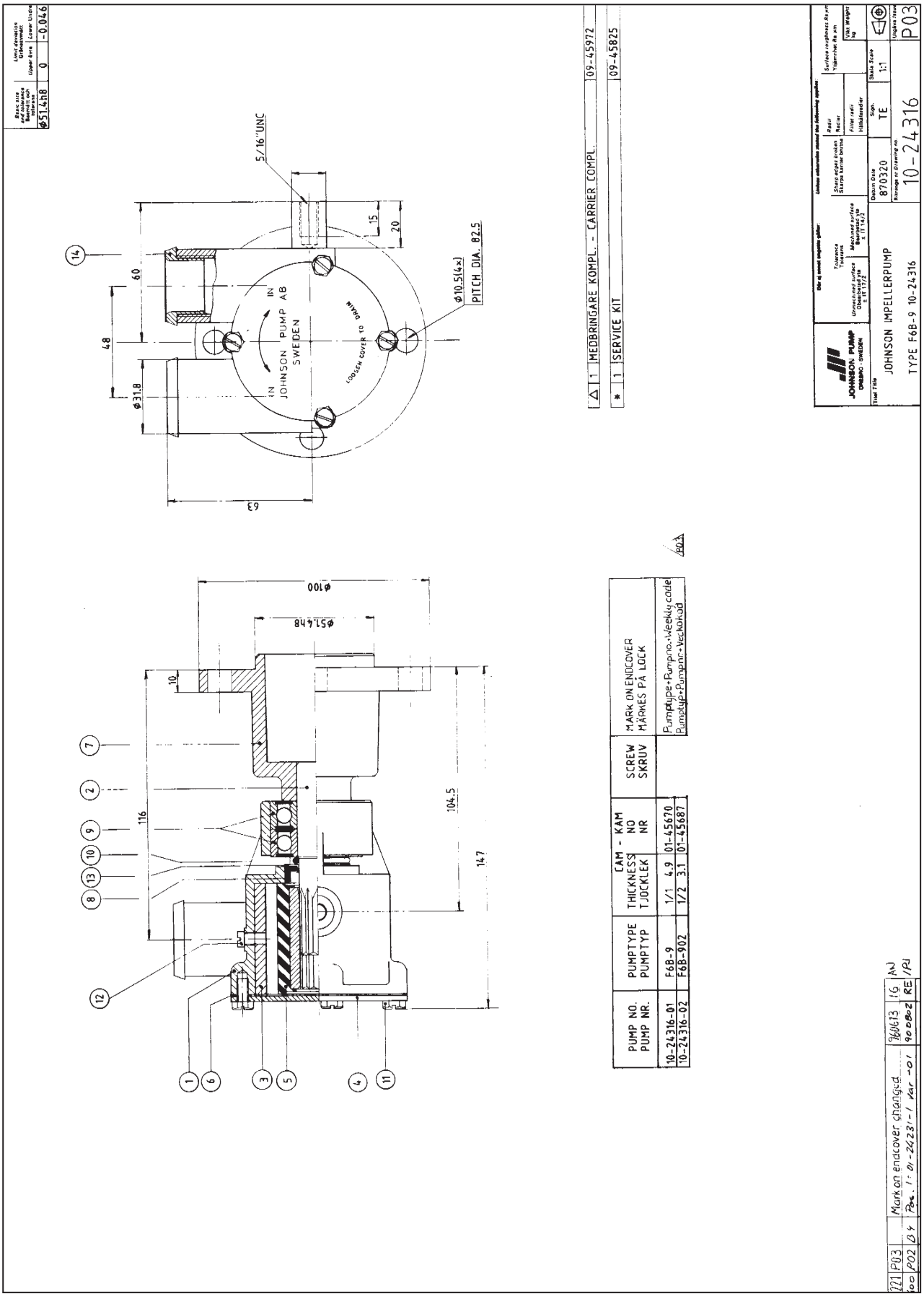

10-24338 pump F7B-9

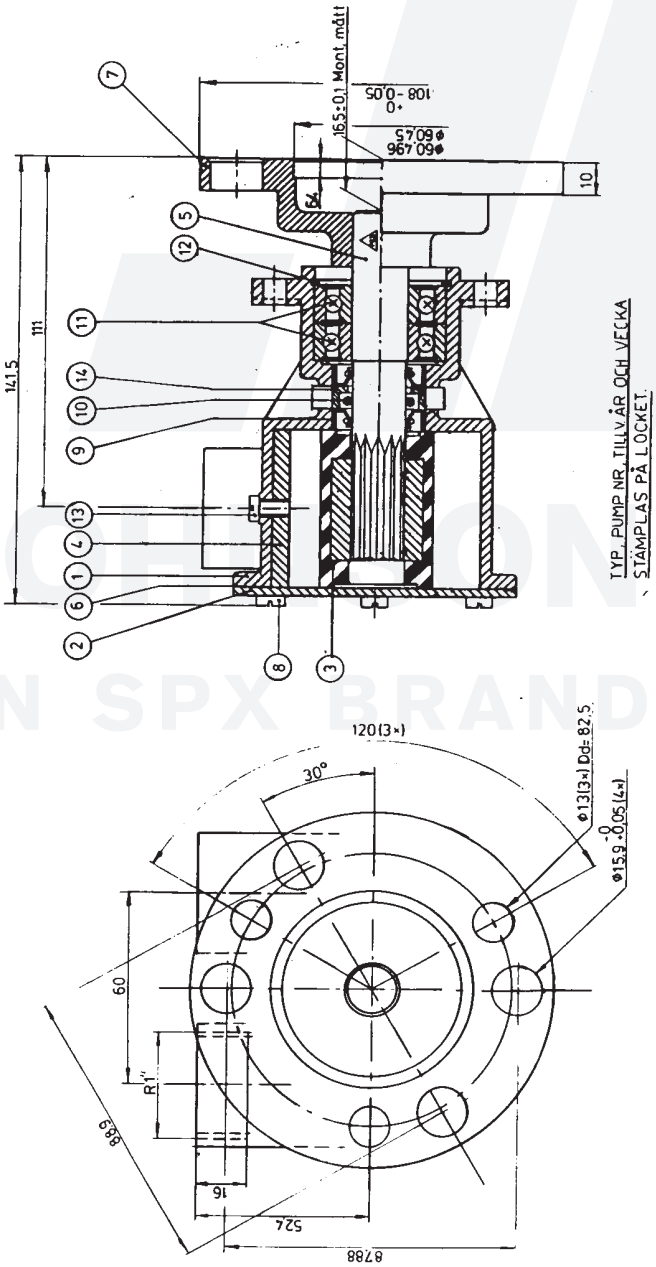

Drawing No.	Pump No./Parts list	Pump type
03-24338	10-24338-01	F7B-9

Part nos according to Parts list

JOHNSON PUMP
ORMINGE - SWEDEN

Total Title
JOHNSON IMPELLERPUMP

Date 890221
Sign TL
Scale 1:1

F7B-9 Impeller pump
Art. No. 10-24338-02

Part no.	Description GB	Position	Quantity
01-24125	BODY F7B-9	1	1
01-42441	ENDCOVER F7B-	2	1
08-1028B	IMPELLER	3	1
01-42679	CAM 1/1 F7B/F70B	4	1
01-46469	SHAFT F7B-9	5	1
01-42445	GASKET F4B/F7B-	6	1
01-35828-1	CARRIER F7B-9	7	1
0.0279.033	SCREW M5X8 ISO1207 BRASS	8	6
0.2233.001	LIP SEAL 16X28X7 DPSM	9	2
0.2173.402	O-RING 15.3X2.4 SS1586 NBR70	10	1
0.3431.742	BALL BEARING 6203 2 RS1 ST	11	2
0.0371.040	RETAIN. RING BORE D40 DIN472 SPRST	12	1
01-46794-01	SCREW 12-24UNCX9.5 BRASS	13	1
01-45181	WASHER F5/F7B-9	14	1

003	P04	Ändring av lockstämpel	950627	IG PJ
244	P03	0 4 Spår i anlanda utgått	940225	AN PJ
231	P02	B2-3 Textnor tillk.	89-04-03	JT

The product, i.e. concept, design and construction, is the property of SPX Johnson Pump Marine AB

JOHNSON PUMP
AN SPX BRAND

F7B-9 Impeller pump
Art. No. 10-24428-01

Part no.	Description GB	Position	Quantity
01-24125-4	BODY F7B-9	1	1
01-42441	ENDCOVER F7B-	2	1
08-1028B	IMPELLER	3	1
01-42679	CAM 1/1 F7B/F70B	4	1
01-42445	GASKET F4B/F7B-	6	1
04-46429-01	CARRIER CPL	7	1
0.0279.033	SCREW M5X8 ISO1207 BRASS	8	6
0.2233.001	LIP SEAL 16X28X7 DPSM	9	2
0.2173.402	O-RING 15.3X2.4 SS1586 NBR70	10	1
0.3431.742	BALL BEARING 6203 2 RS1 ST	11	2
0.0371.040	RETAIN. RING BORE D40 DIN472 SPRST	12	1
01-46794-01	SCREW 12-24UNCX9.5 BRASS	13	1
01-45181	WASHER F5/F7B-9	14	1
01-46321	GUIDE RING F7B-9	15	1
01-46396	BUSHING F7B-9	0	2

The product, i.e. concept, design and construction, is the property of SPX Johnson Pump Marine AB

10-24428 pump F7B-9

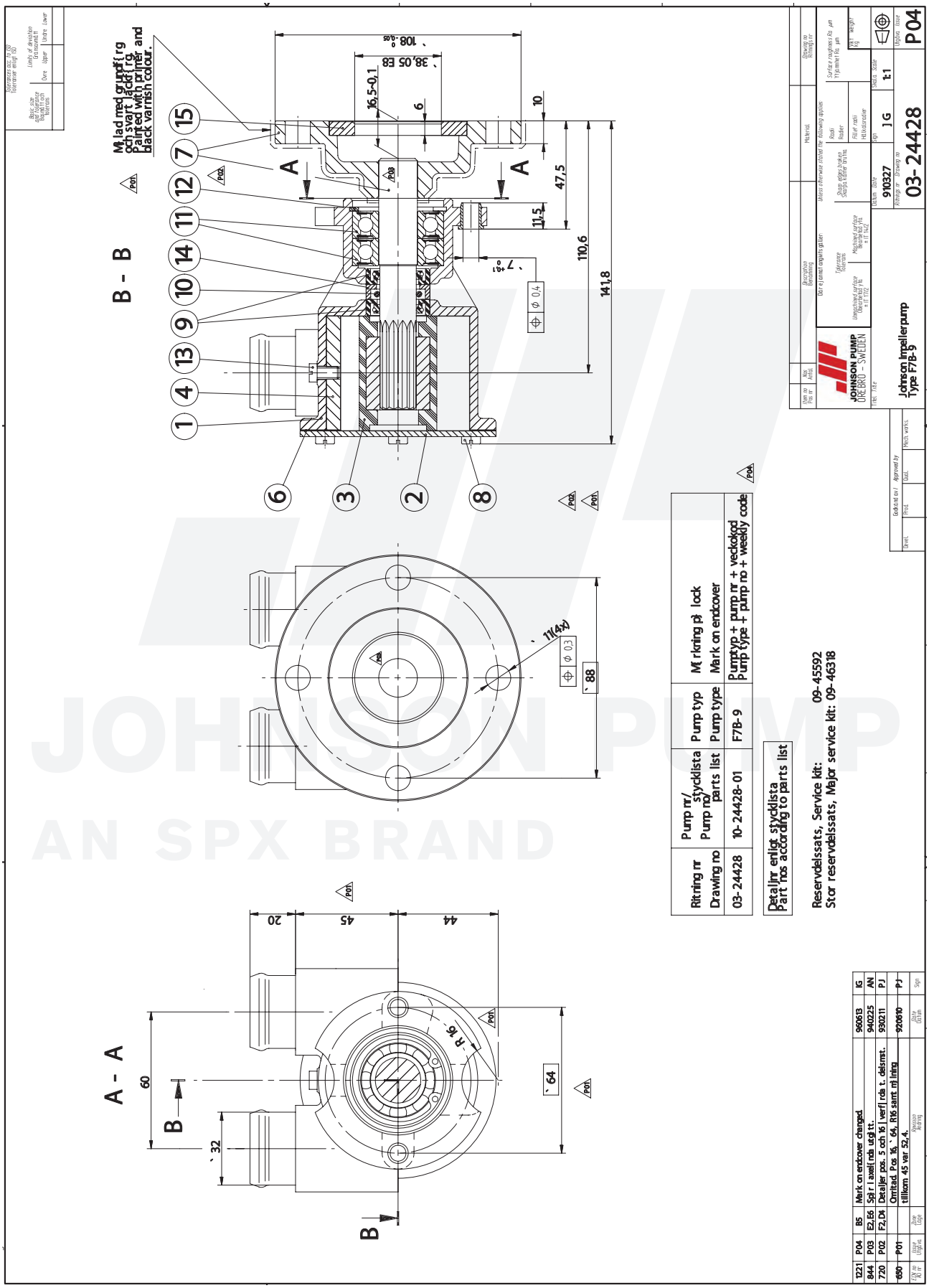

JOHNSON PUMP
AN SPX BRAND

10-24143 pump F35B-9

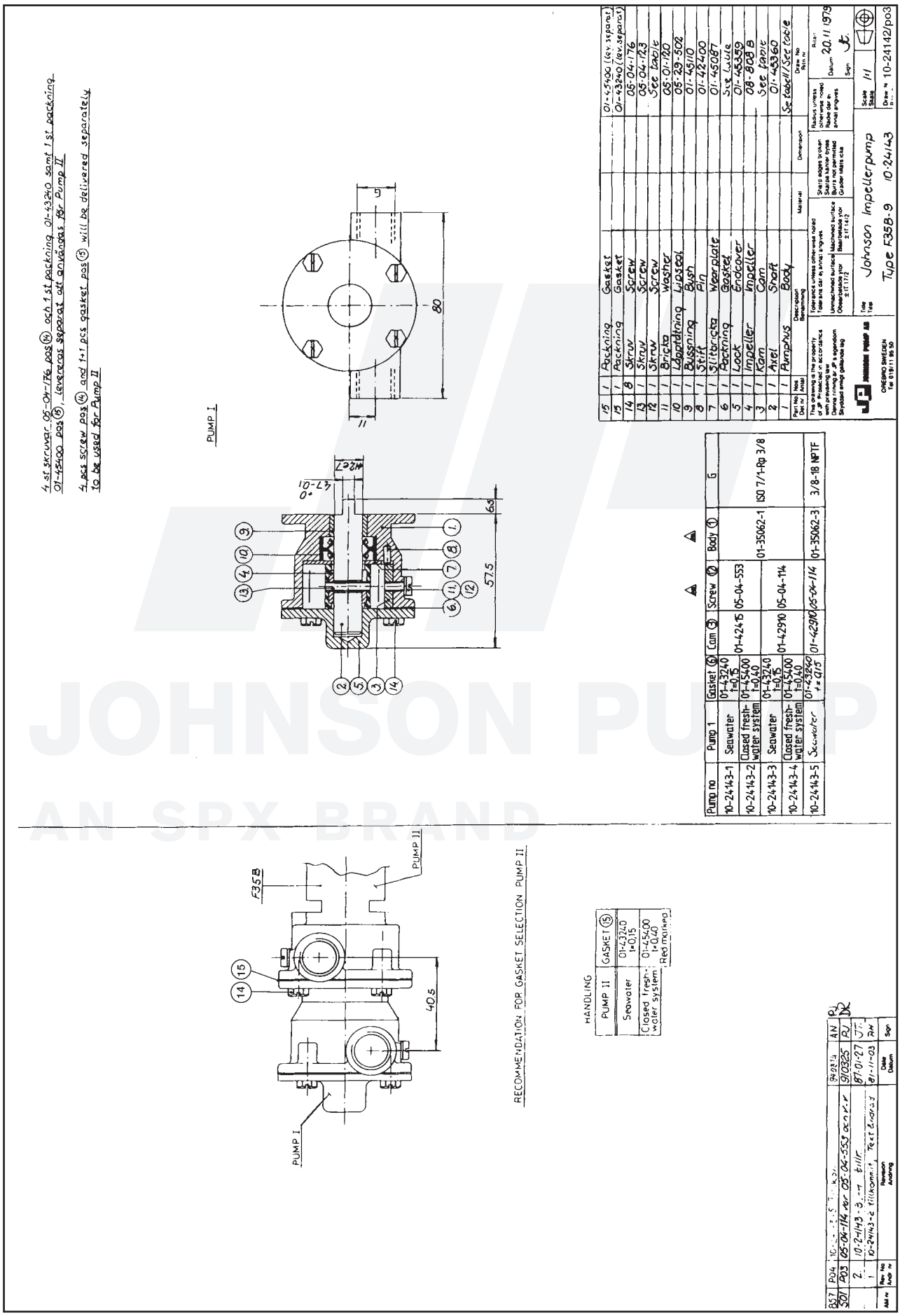

JOHNSON PUMP
AN SPX BRAND

The product, i.e. concept, design and construction, is the property of SPX Johnson Pump Marine AB

JOHNSON PUMP
AN SPX BRAND

F35B Impeller pump
Art. No. 10-24638-01

Part no.	Description GB	Position	Quantity
01-36002	PUMP BODY F35B SWP	1	1
01-36001	PUMP BODY F35B FWP	2	1
01-47053	SHAFT F35B SWP	3	1
01-47052	SHAFT F35B FWP	4	1
01-36000	INTERMEDIATE PART F35B	5	1
01-46739-2	ENDCOVER F35B NEUTRAL	6	1
08-808B-12	IMPELLER W 47844	7	2
01-42415	CAM 1/2 F35B-	8	2
01-45542	SPACER D 12X16X4,3	9	2
01-42400	PIN F35B-/F7B/F70B	10	3
01-46676	WEAR PLATE F35B-8 SS	11	3
01-45049	PLATE F35/F4B-8	12	2
01-45659	WASHER F4B-8/-9	13	3
01-46790-01	WASHER D7.5XD4X1 CU	14	2
0.0141.700	TAP BOLT M4X8 ISO4017 A2-70	15	8
01-46794-10	SCREW 8-32UNCX7	16	2
0.0300.742	SET SCREW M6X6 DIN916 A2	17	2
0.2173.440	O-RING 42X2 NBR70	18	2
0.2173.432	O-RING 11.3X2.4 SS1586 NBR70	19	3
0.3431.748	BALL BEARING 6001 2 RS1 ST	20	4
0.2247.021	MECH.SEAL COMPL D12	21	3
0.0371.028	RETAIN. RING BORE D28 DIN472 SPRST	22	2
0.0370.012	EXT. CIRCLIP D12 DIN471 ST	23	2
0.0370.512	EXT. CIRCLIP D12 DIN471 FB	24	3
01-47054	LABEL	25	1
01-47055-1	PAINT PROTECTION ø 41	0	1
0.0633.701	PLUG TYPE 410025 D14MM DBI	0	4

The product, i.e. concept, design and construction, is the property of SPX Johnson Pump Marine AB

10-24638 pump F35B

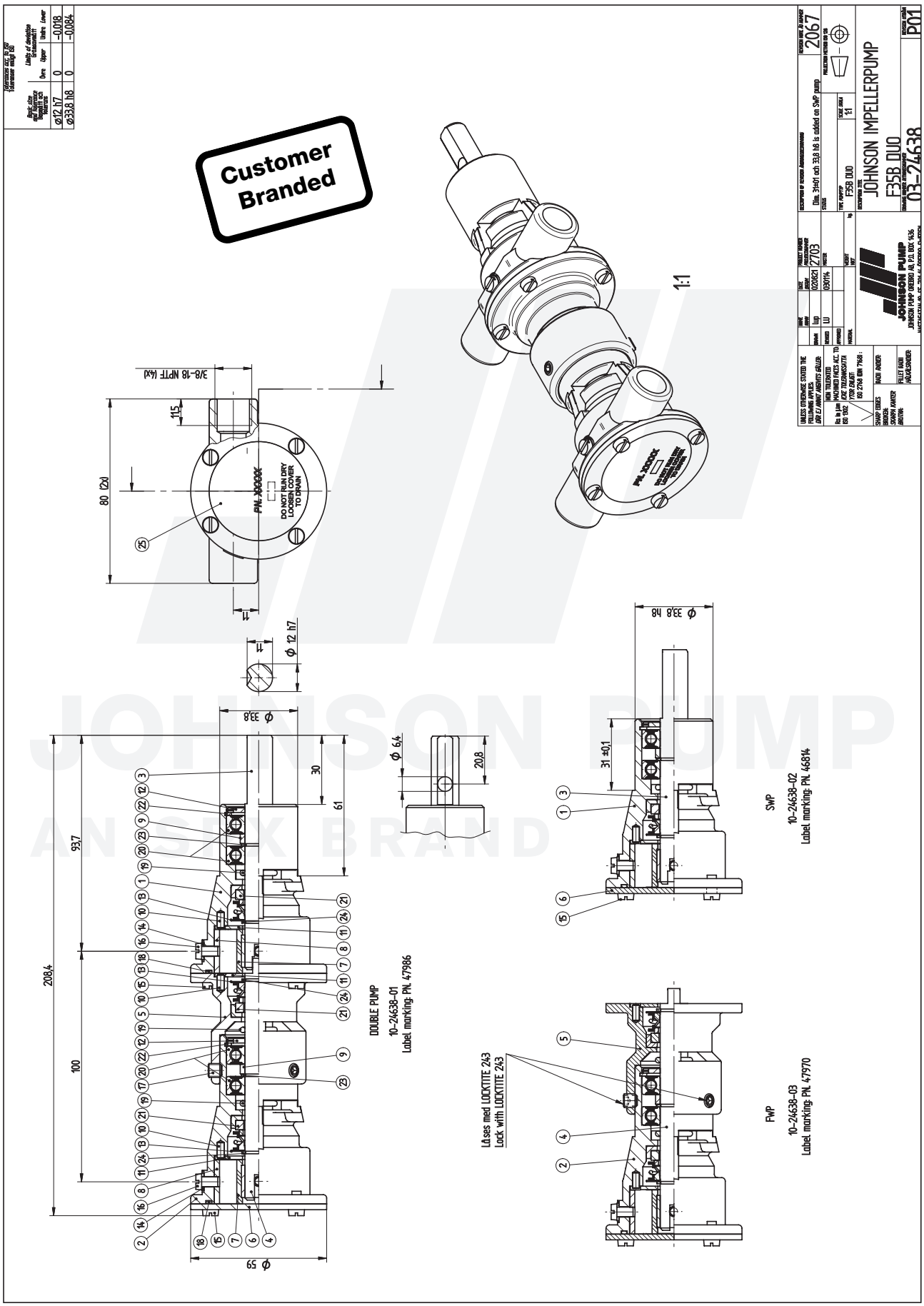

10-35065 pump F35B/F35B-9

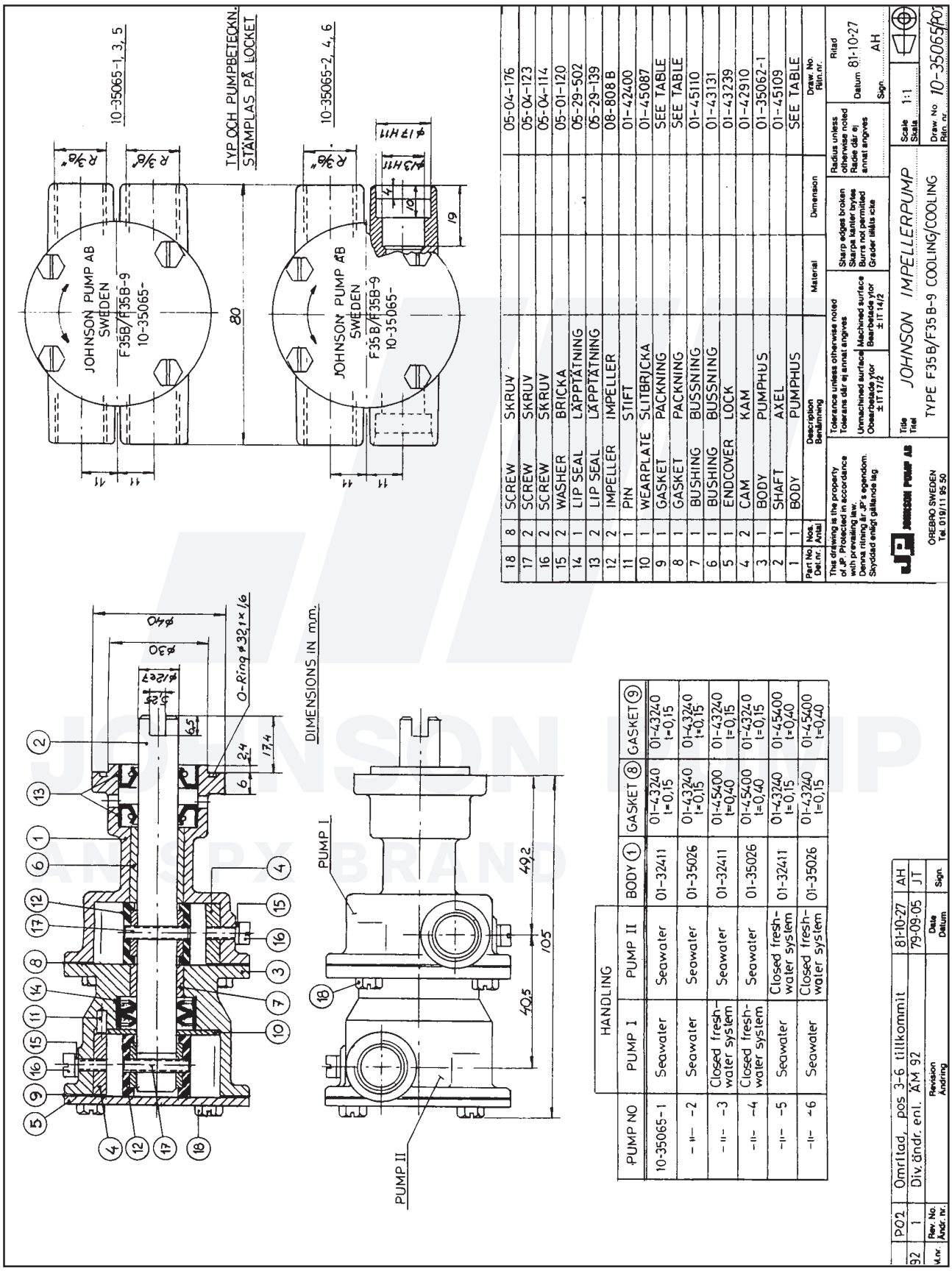

The product, i.e. concept, design and construction, is the property of SPX Johnson Pump Marine AB

10-35066 pump F35B/F35B-9

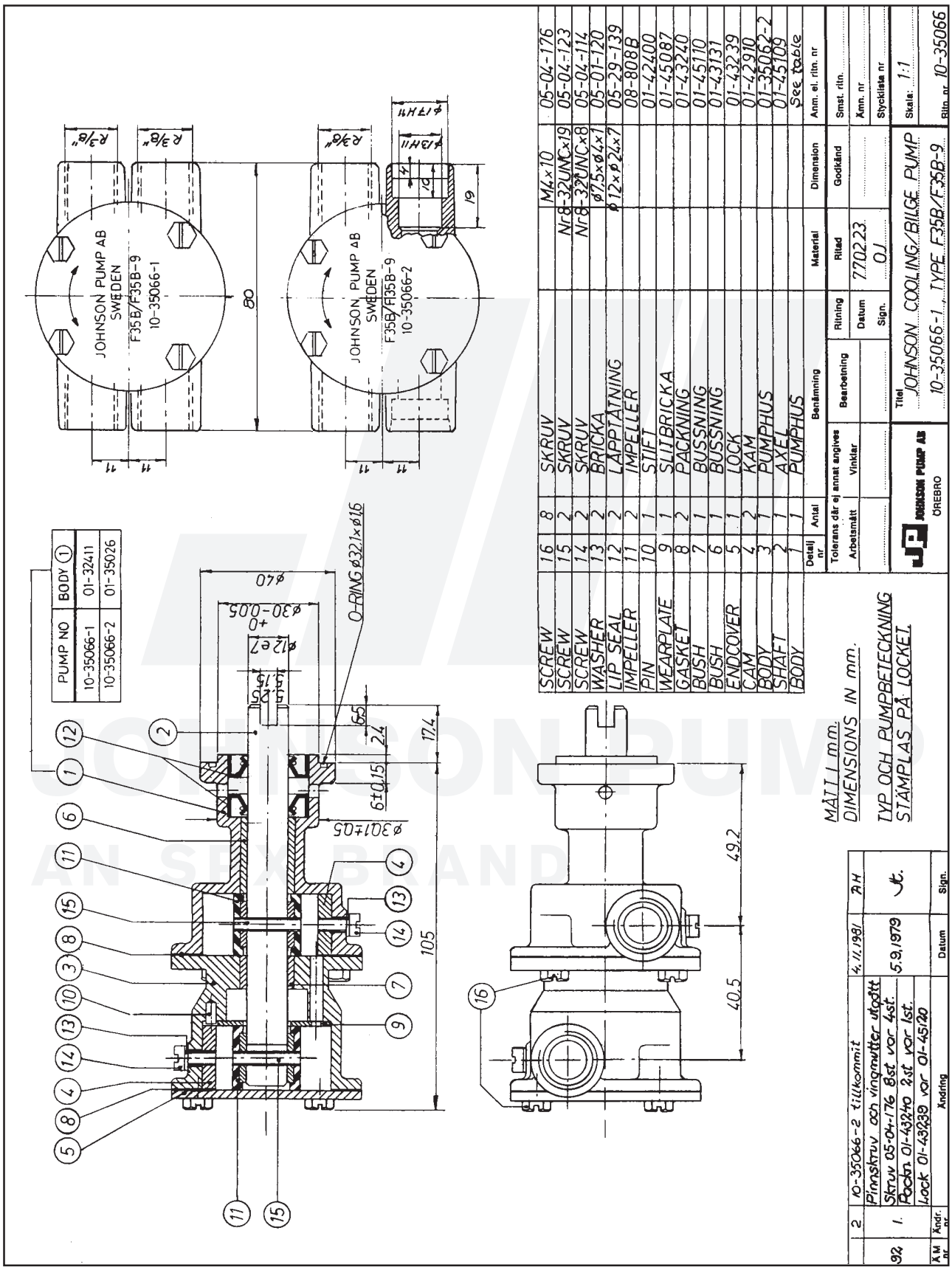

JOHNSON PUMP AN SPX BRAND

10-35141 pump F35B-9

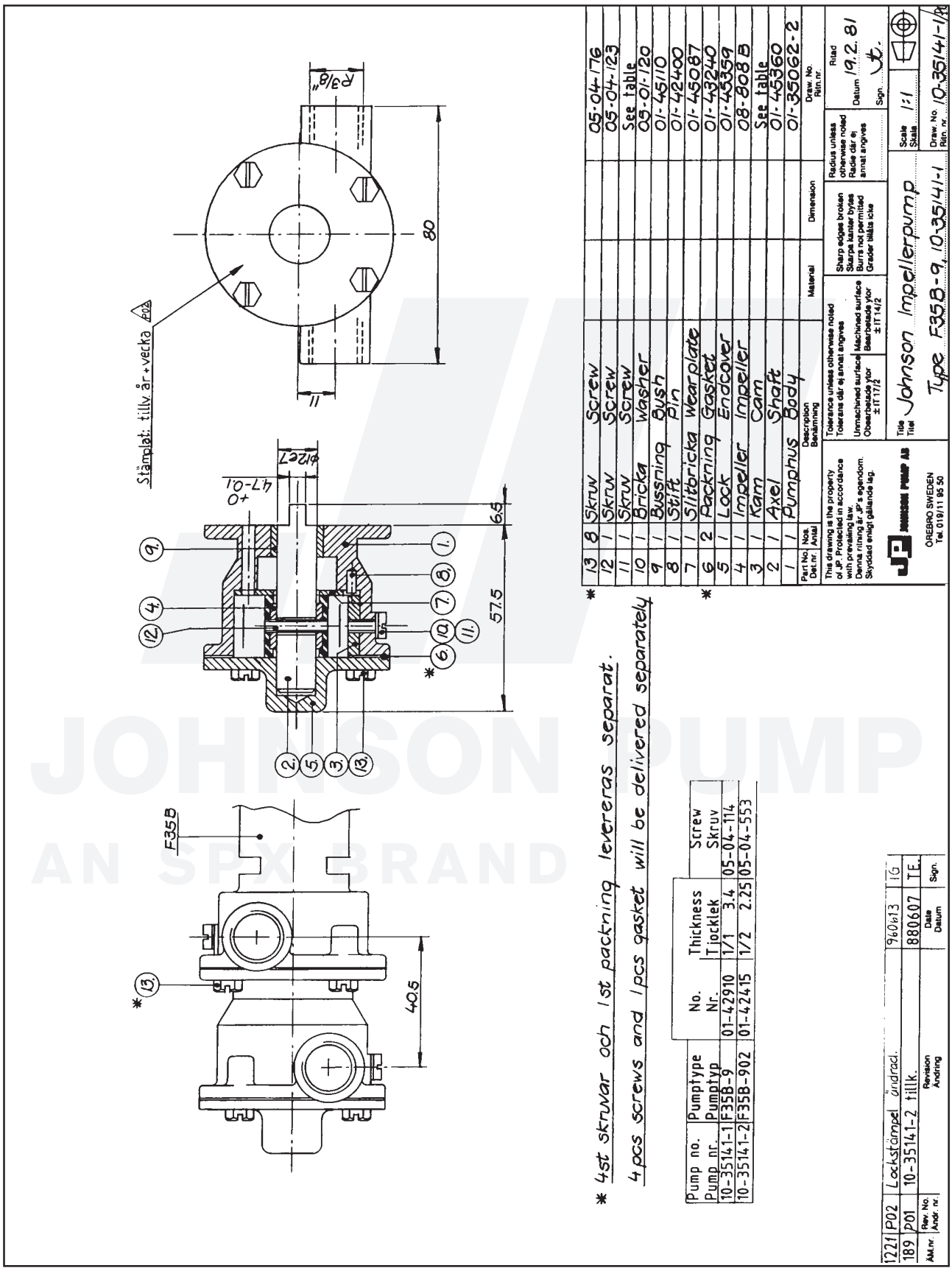

JOHNSON PUMP
AN SPX BRAND

The product, i.e. concept, design and construction, is the property of SPX Johnson Pump Marine AB

JOHNSON PUMP
AN SPX BRAND

F35B/F35B-9 Impeller pump
Art. No. 10-35731-01

Part no.	Description GB	Position	Quantity
0.0141.500	SCREW M4X10 DIN933SLOTTED	10	8
0.0370.012	EXT. CIRCLIP D12 DIN471 ST	16	1
0.0371.028	RETAIN. RING BORE D28 DIN472 SPRST	15	1
0.0502.003	KEY A 3X3X12 DIN6885A ST	17	1
0.2173.468	O-RING 32.1X1.6 SS1586 NBR70	18	1
0.2233.010	LIP SEAL 12X24X7 DPSM	13	2
0.2233.200	LIP SEAL 12X24X10 DUPLEX	24	1
0.3431.748	BALL BEARING 6001 2 RS1 ST	14	2
0.3444.001	CARTON NO. 1 170X135X 90	0	1
01-35062-3	BODY F35B-9	5	1
01-35096-4	BODY F35B-9	1	1
01-42400	PIN F35B-/F7B/F70B	8	2
01-42910	CAM 1/1 F35B-	4	2
01-43238	CLAMP F35/F4B-9	19	2
01-43240	GASKET F35B-	22	1
01-45087	WEARPLATE F35B-	7	2
01-45110	BUSHING F35B-9	23	1
JP 533	INSRUCTIONS/IMPELLERCARD	0	1
01-45359	ENDCOVER F35B-9	21	1
01-45360	SHAFT F35B-9	20	1
01-45400	GASKET F35B-9	6	1
01-45669	SHAFT F35B-9	2	1
01-46790-01	WASHER D7.5XD4X1 CU	12	2
01-46794-03	SCREW 8-32UNCX8	11	2
08-808B-1	IMPELLER	3	2

The product, i.e. concept, design and construction, is the property of SPX Johnson Pump Marine AB

10-35731 pump F35B/F35B-9

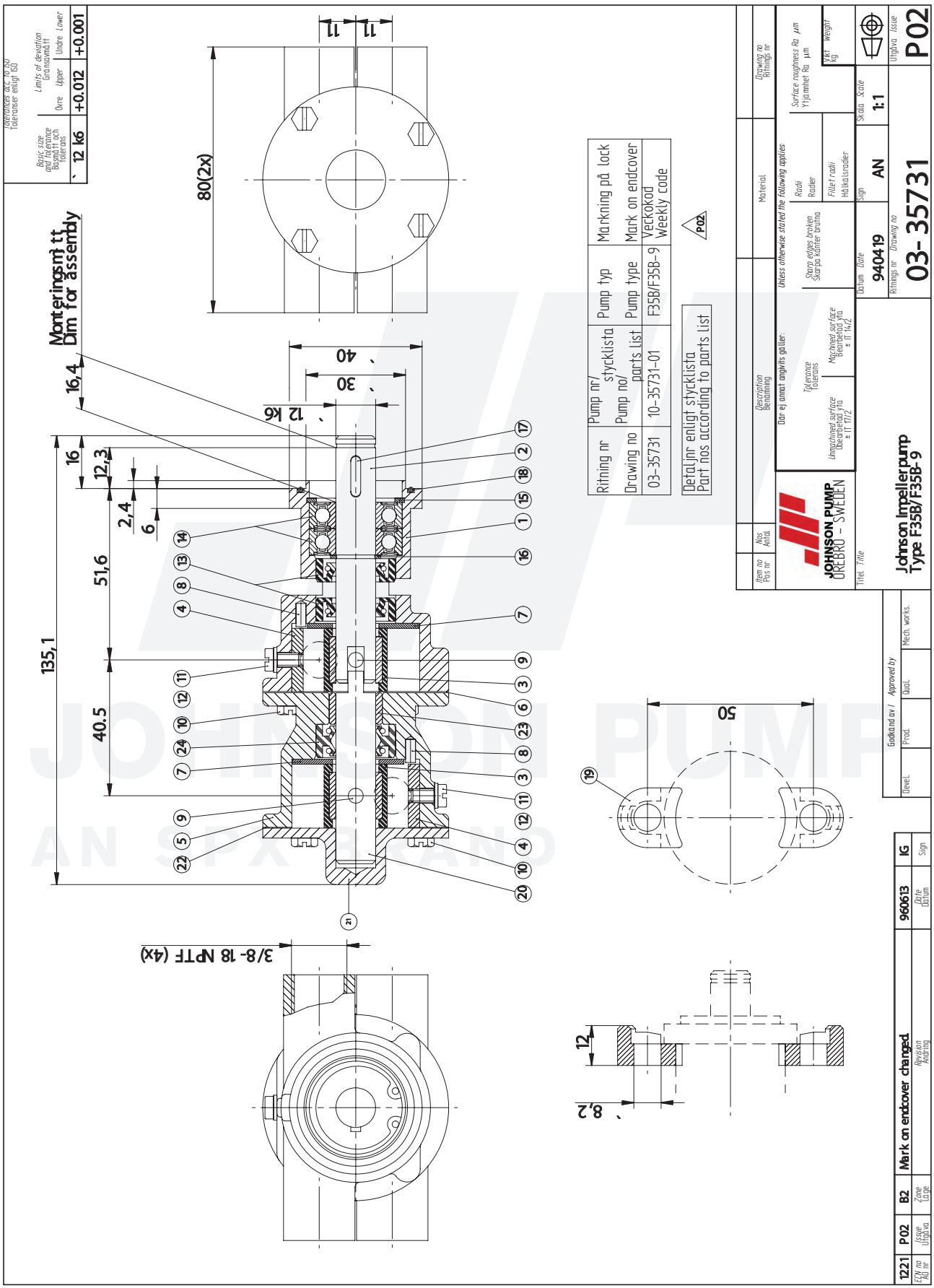

JOHNSON PUMP
AN SPX BRAND

10-24095 pump F4B/F4B-8

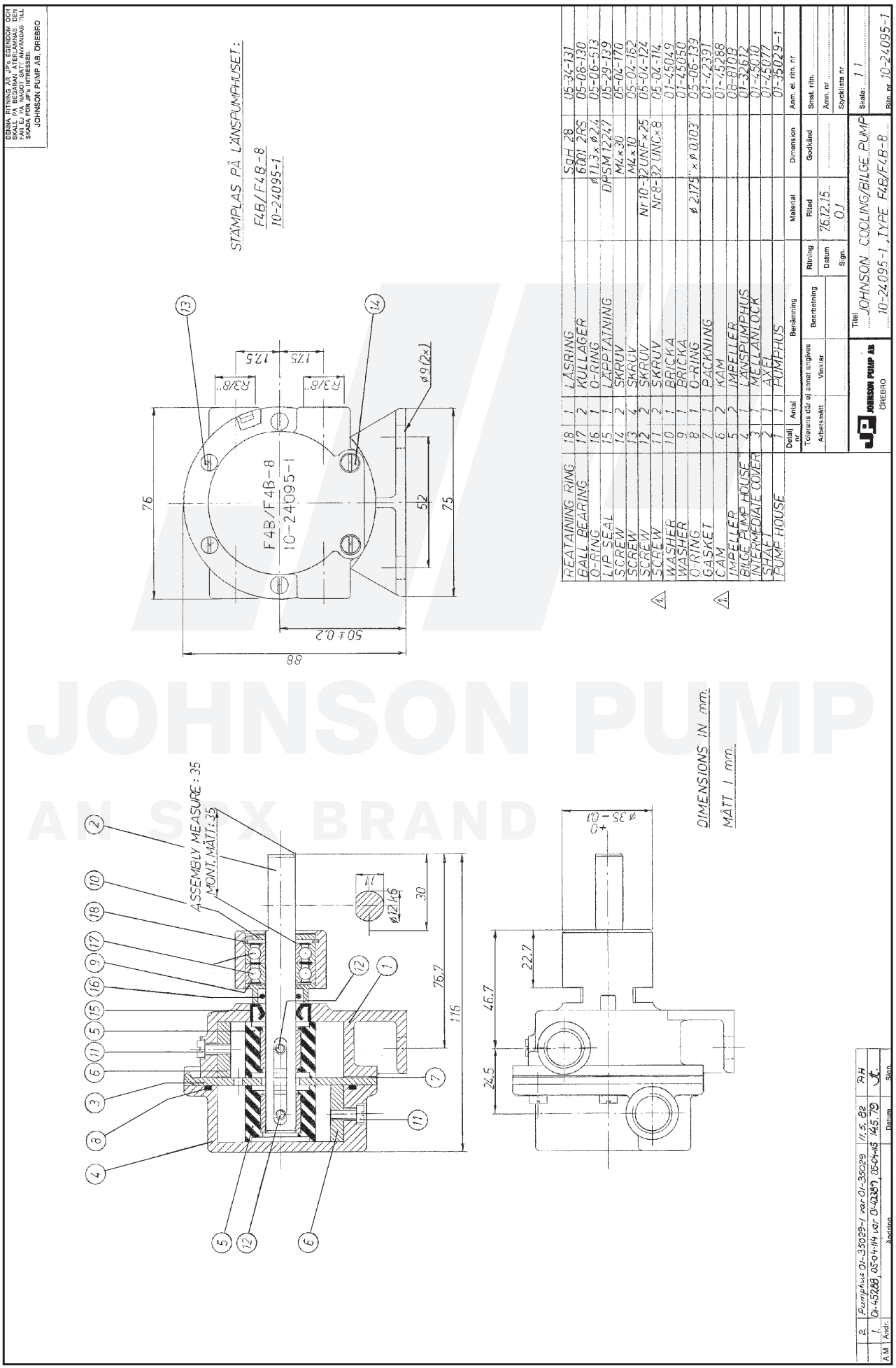

JOHNSON PUMP
AN SPX BRAND

The product, i.e. concept, design and construction, is the property of SPX Johnson Pump Marine AB

10-24097 pump F4B/F4B-9

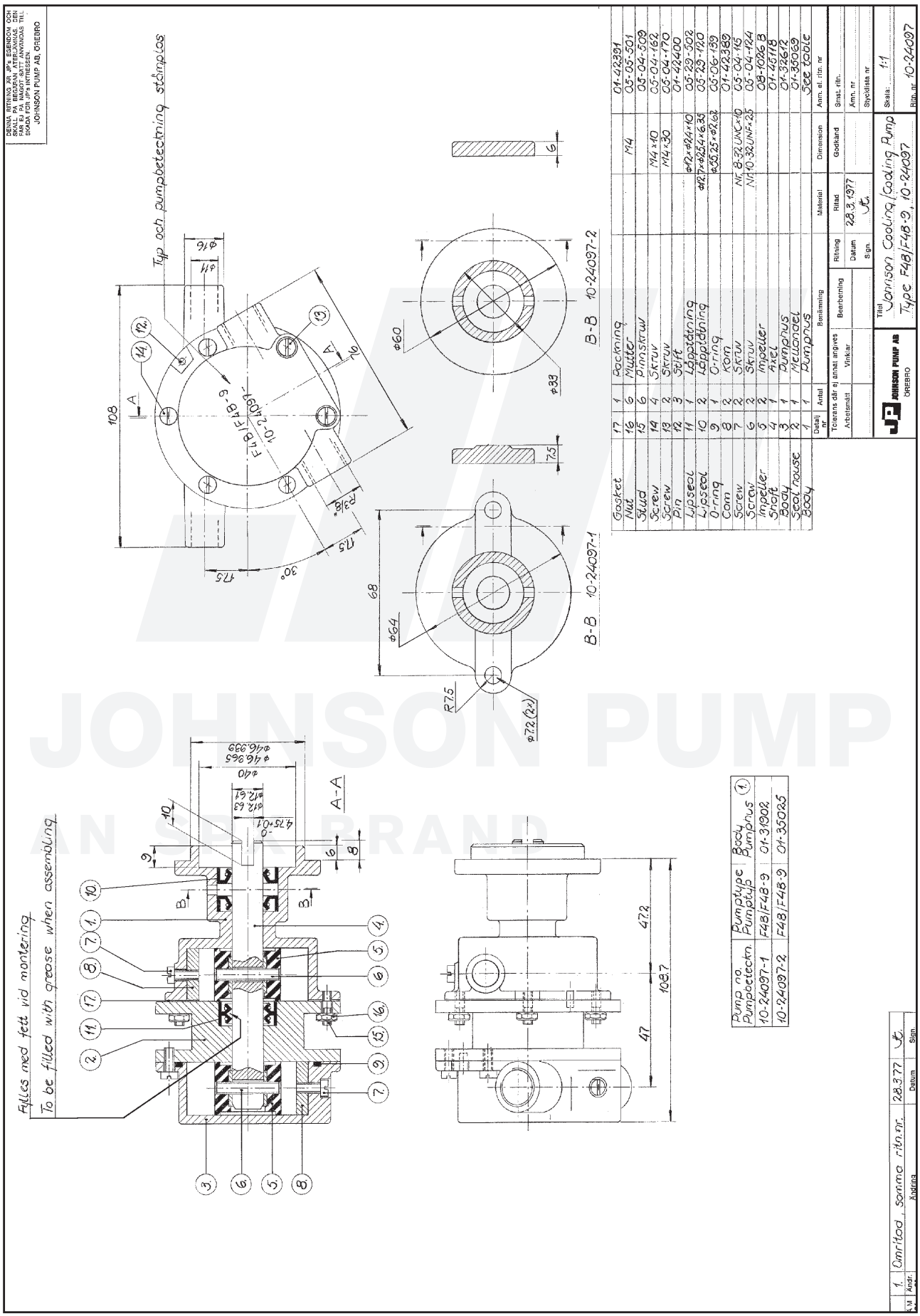

JOHNSON PUMP
AN SPX BRAND

10-24124 pump F4B/F4B-9

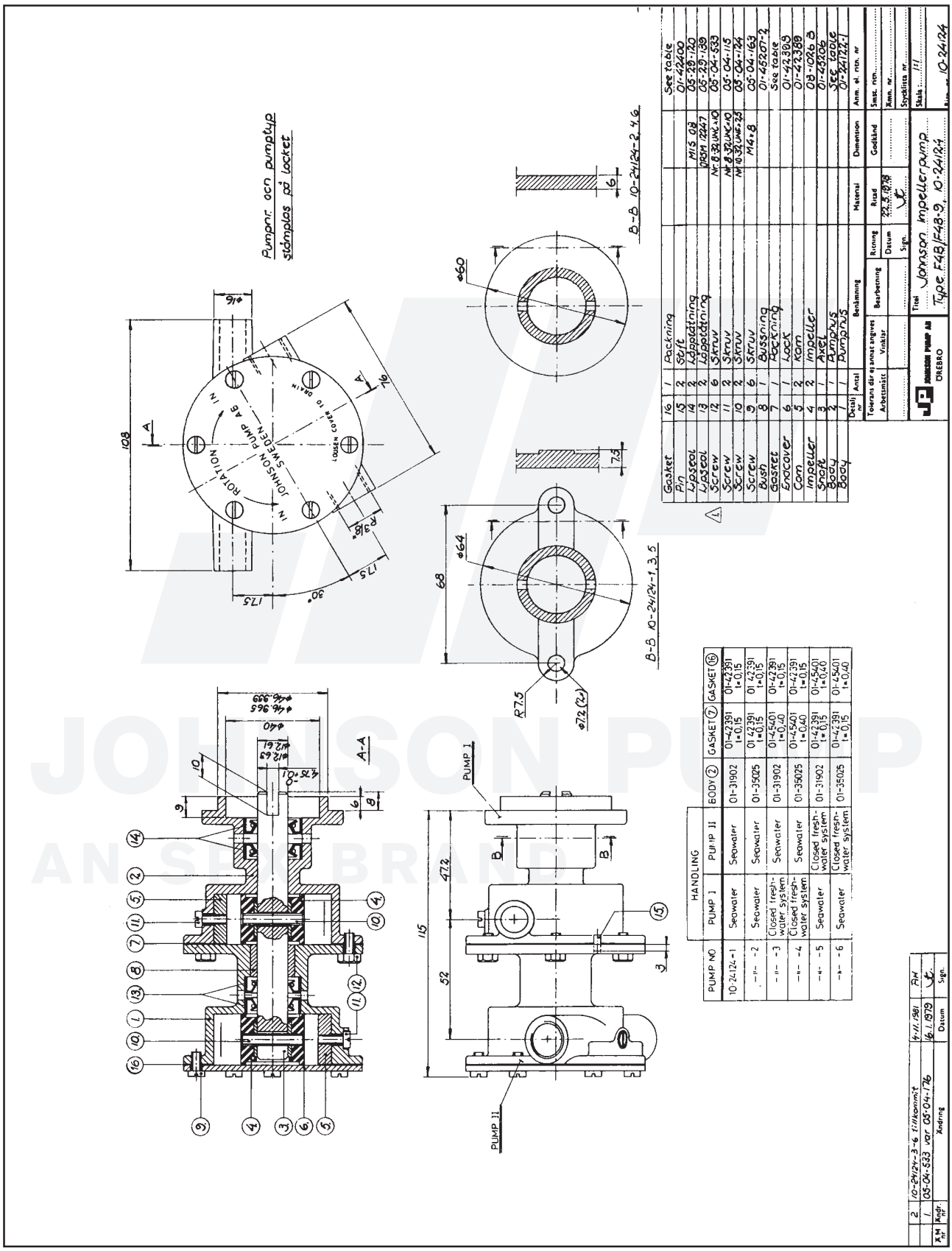

PUMP NO	PUMP I	PUMP II	BODY (2)	GASKET (7)	GASKET (16)
10-24124-1	Seawater	Seawater	01-31902	01-42391 t=0,15	01-42391 t=0,15
-"- -2	Seawater	Seawater	01-35025	01-42391 t=0,15	01-42391 t=0,15
-"- -3	Closed fresh-water system	Seawater	01-31902	01-45401 t=0,40	01-42391 t=0,15
-"- -4	Closed fresh-water system	Seawater	01-35025	01-45401 t=0,40	01-42391 t=0,15
-"- -5	Seawater	Closed fresh-water system	01-31902	01-42391 t=0,15	01-45401 t=0,40
-"- -6	Seawater	Closed fresh-water system	01-35025	01-42391 t=0,15	01-45401 t=0,40

Nr	Ändr. nr	Ändring	Datum	Sign.
2	10-24124-3-6 tillkommit	4.11.1981		AM
1	05-04-533 var 05-04-176	16.1.1979		

JOHNSON PUMP
AN SPX BRAND

The product, i.e. concept, design and construction, is the property of SPX Johnson Pump Marine AB

10-24144 pump F4B-9

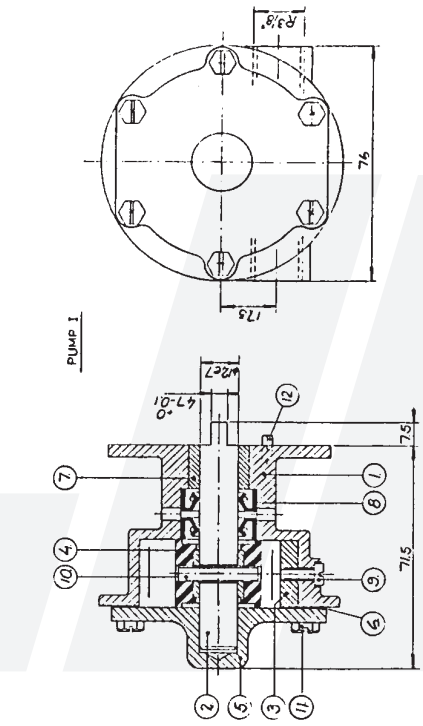

F4B-9 Impeller pump
Art.No. 10-24144-1

Part no.	Description GB	Position	Quantity
01-24122-2	BODY F4B-9	1	1
01-45313	SHAFT F4B-9	2	1
01-42389	CAM 1/1 F4B-	3	1
08-810B-1	IMPELLER	4	1
01-42388-2	ENDCOVER F4B-9	5	1
01-42391	GASKET F4B-	6	1
01-45207-3	BUSHING F4B-9	7	1
0.2233.010	LIP SEAL 12X24X7 DPSM	8	2
01-46794-04	SCREW 8-32UNCX10	9	1
0.0141.500	SCREW M4X10 DIN933SLOTTED	11	12
01-42400	PIN F35B-/F7B/F70B	12	2
01-45284	GASKET F4B-9	13	1
01-45410	GASKET F4B-9	13	1
01-46790-01	WASHER D7,5XD4X1 CU	0	1

HANDLING		
PUMP NO	PUMP I	GASKET (6)
10-24144-1	Seawater	01-42391 1+0,15
10-24144-2	Closed fresh-water system	01-45401 1+0,40

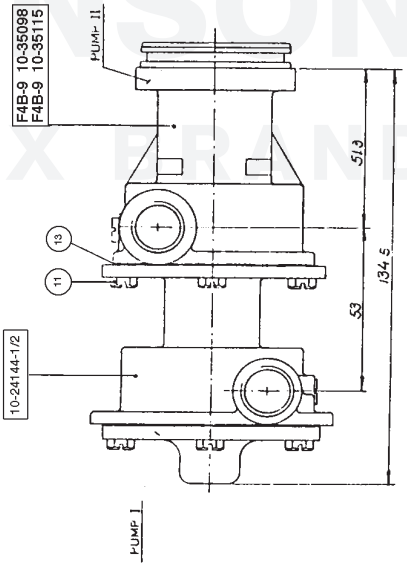

RECOMMENDATION: FOR GASKET SELECTION PUMP II

HANDLING		
PUMP II	GASKET (13)	
Seawater	01-45764 1+0,15	
Closed fresh-water system	01-45610 1+0,40	Red marked

Johnson Impellerpump
Type F4B-9 Cooling/Cooling
Scale 1:1
Drw. No 10-24144
Date 21.11.197

JOHNSON PUMP
AN SPX BRAND

10-24164 pump F4B-9

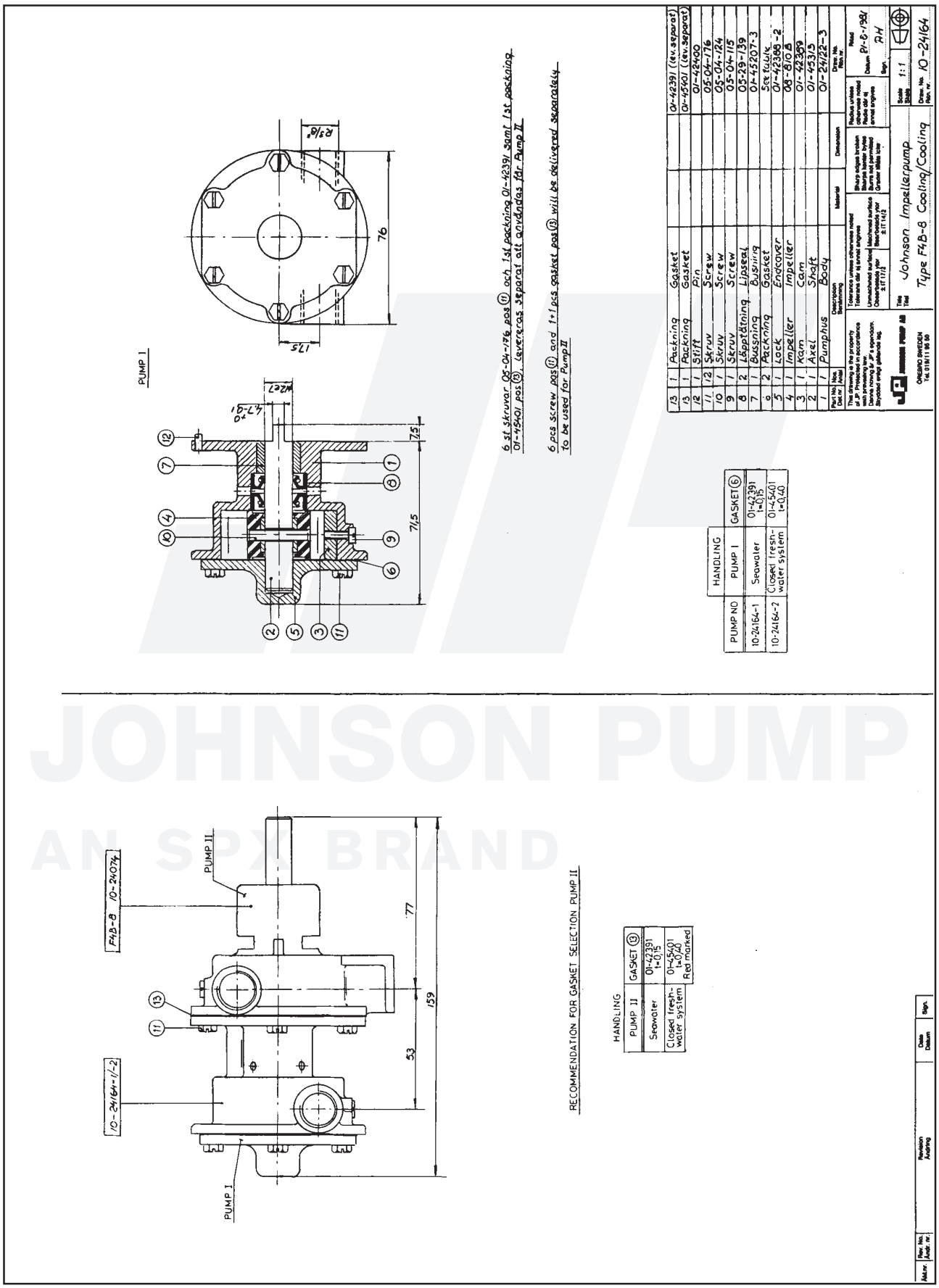

The product, i.e. concept, design and construction, is the property of SPX Johnson Pump Marine AB

10-24165 pump F4B-9

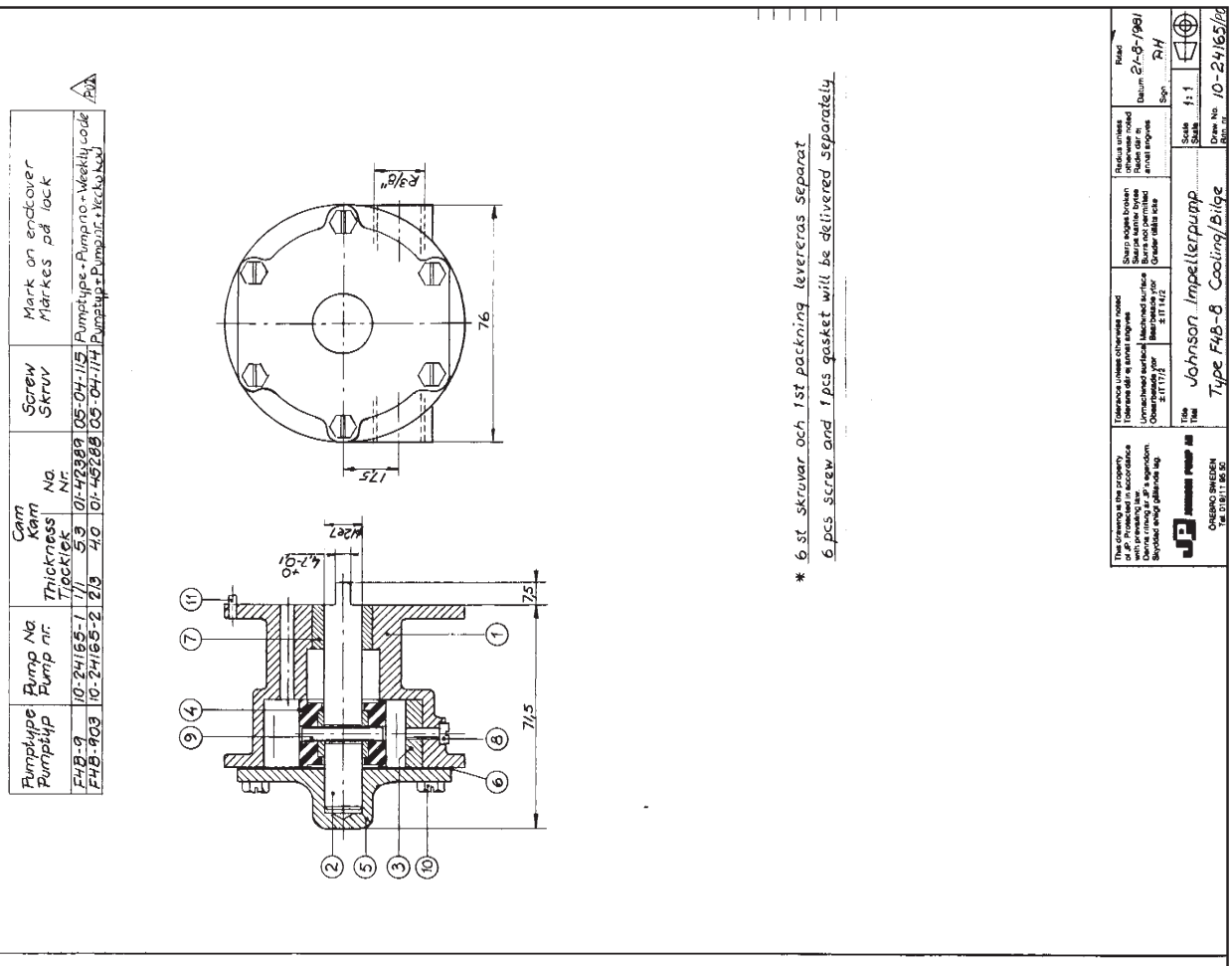

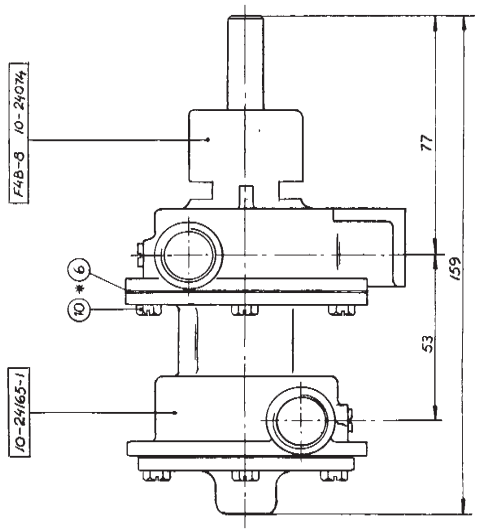

F4B-903 Impeller pump
Art. No. 10-24165-2

Part. No.	Description GB	Position	Quantity
01-24122-4	BODY F4B-9	1	1
01-45313	SHAFT F4B-9	2	1
01-45288	CAM 2/3 F4B-803/-903	3	1
08-810B-1	IMPELLER	4	1
01-42388-2	ENDCOVER F4B-9	5	1
01-42391	GASKET F4B-	6	2
01-45207-3	BUSHING F4B-9	7	1
01-46794-03	SCREW 8-32UNCX8	8	1
0.0141.500	SCREW M4X10 DIN933SLOTTED	10	12
01-42400	PIN F35B-/F7B/F70B	11	1
01-46790-01	WASHER D7.5XD4X1 CU	0	1
0.3444.001	CARTON NO. 1 170X135X 90	0	1
JP 533	INSRUCTIONS/IMPELLERCARD	0	1

10-24166 pump F4B-9

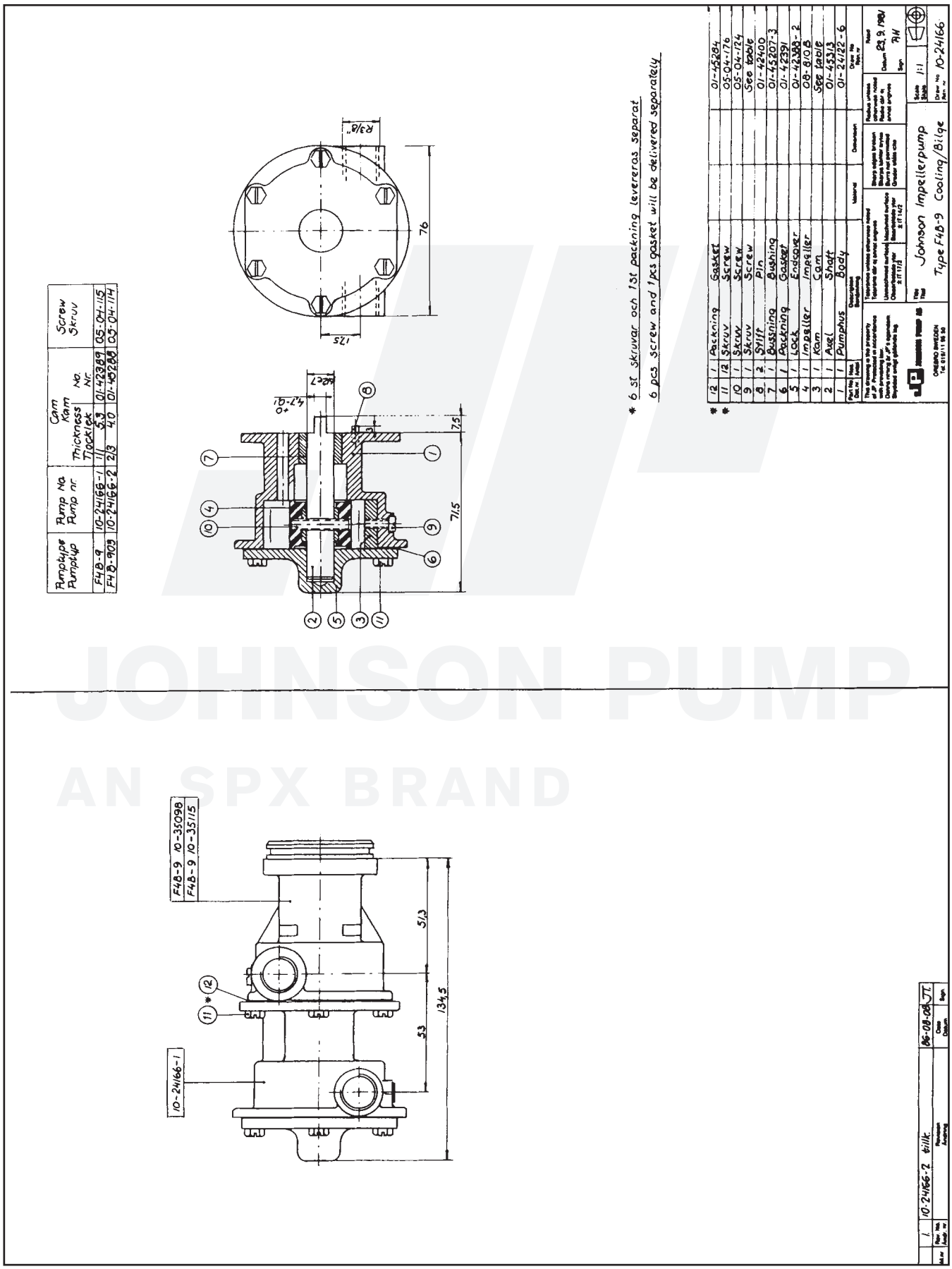

JOHNSON PUMP
AN SPX BRAND

The product, i.e. concept, design and construction, is the property of SPX Johnson Pump Marine AB

10-24167 pump F4B-9

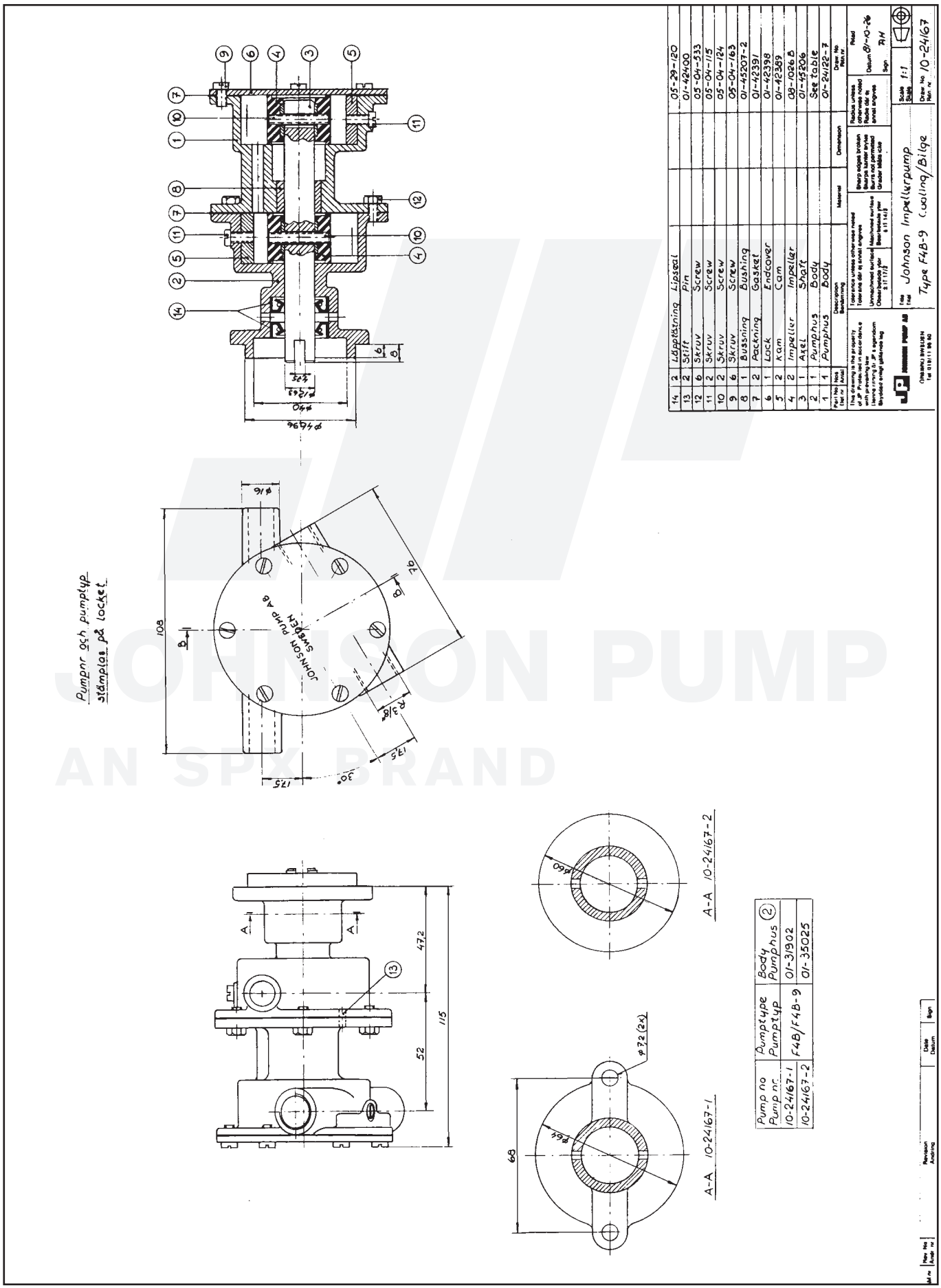

JOHNSON PUMP
AN SPX BRAND

10-35142 pump F4B-9

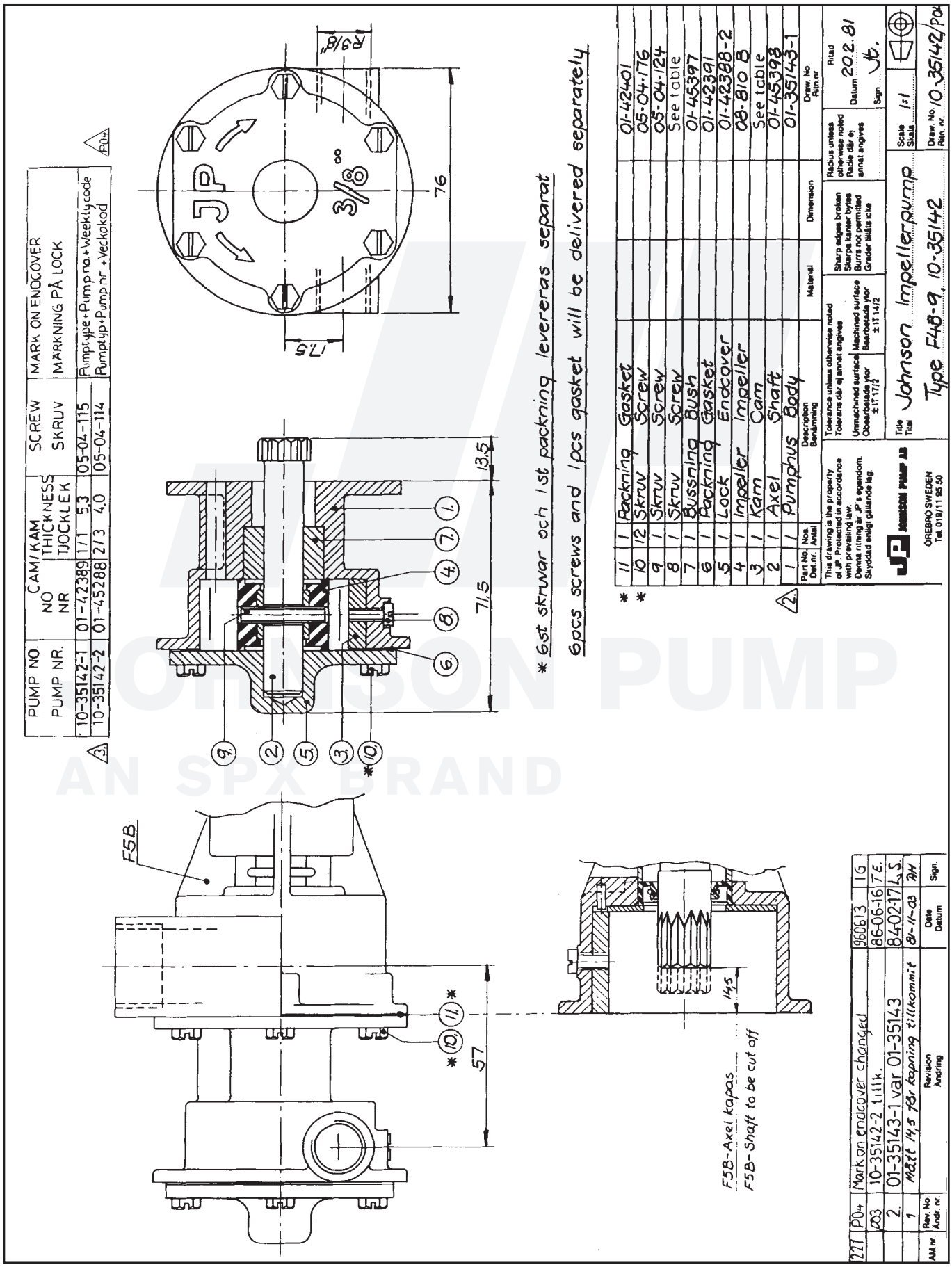

JOHNSON PUMP
AN SPX BRAND

The product, i.e. concept, design and construction, is the property of SPX Johnson Pump Marine AB

10-35205 pump F4B-9

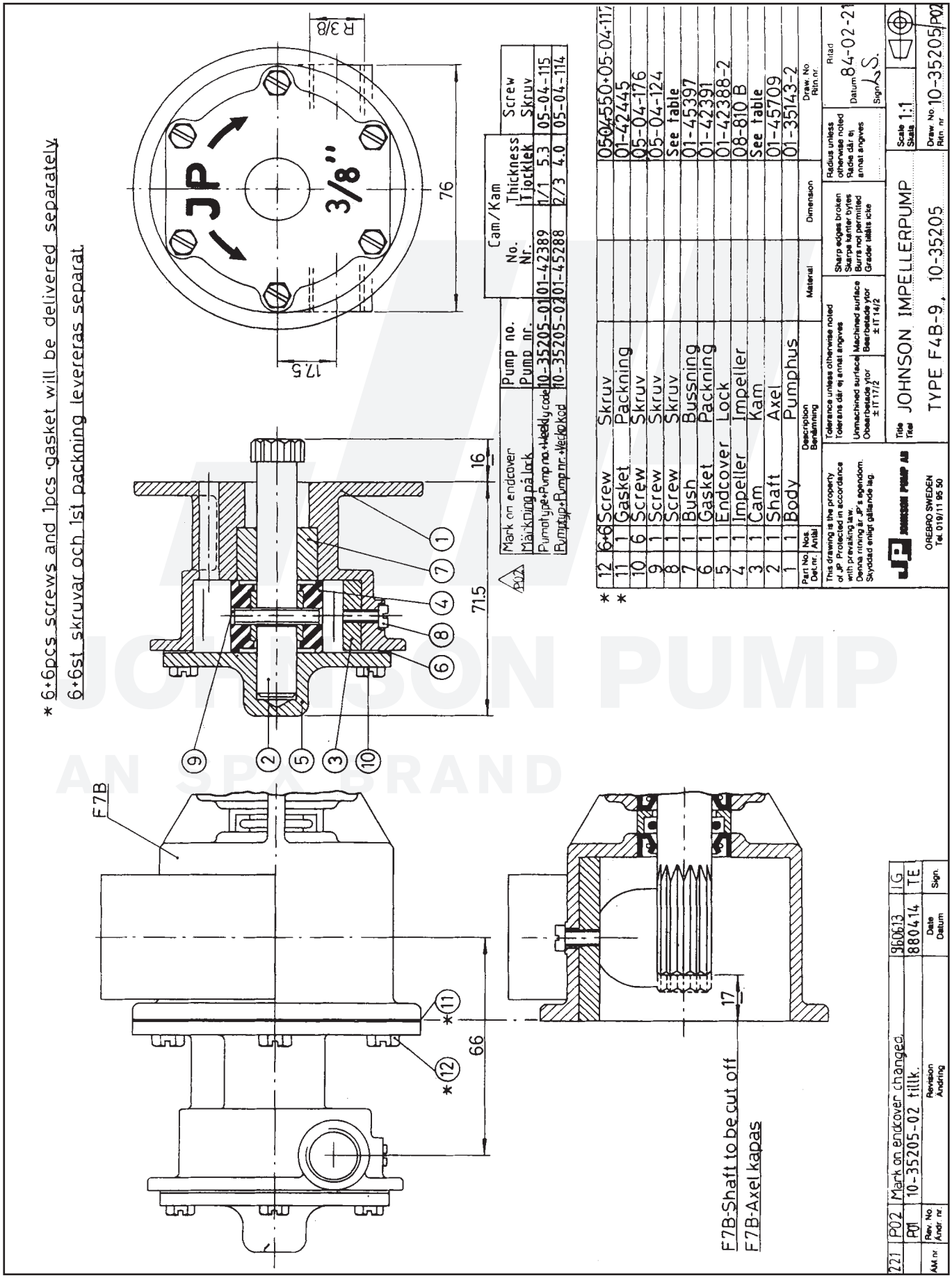

JOHNSON PUMP
AN SPX BRAND

10-24047 pump F5B/F4B-9

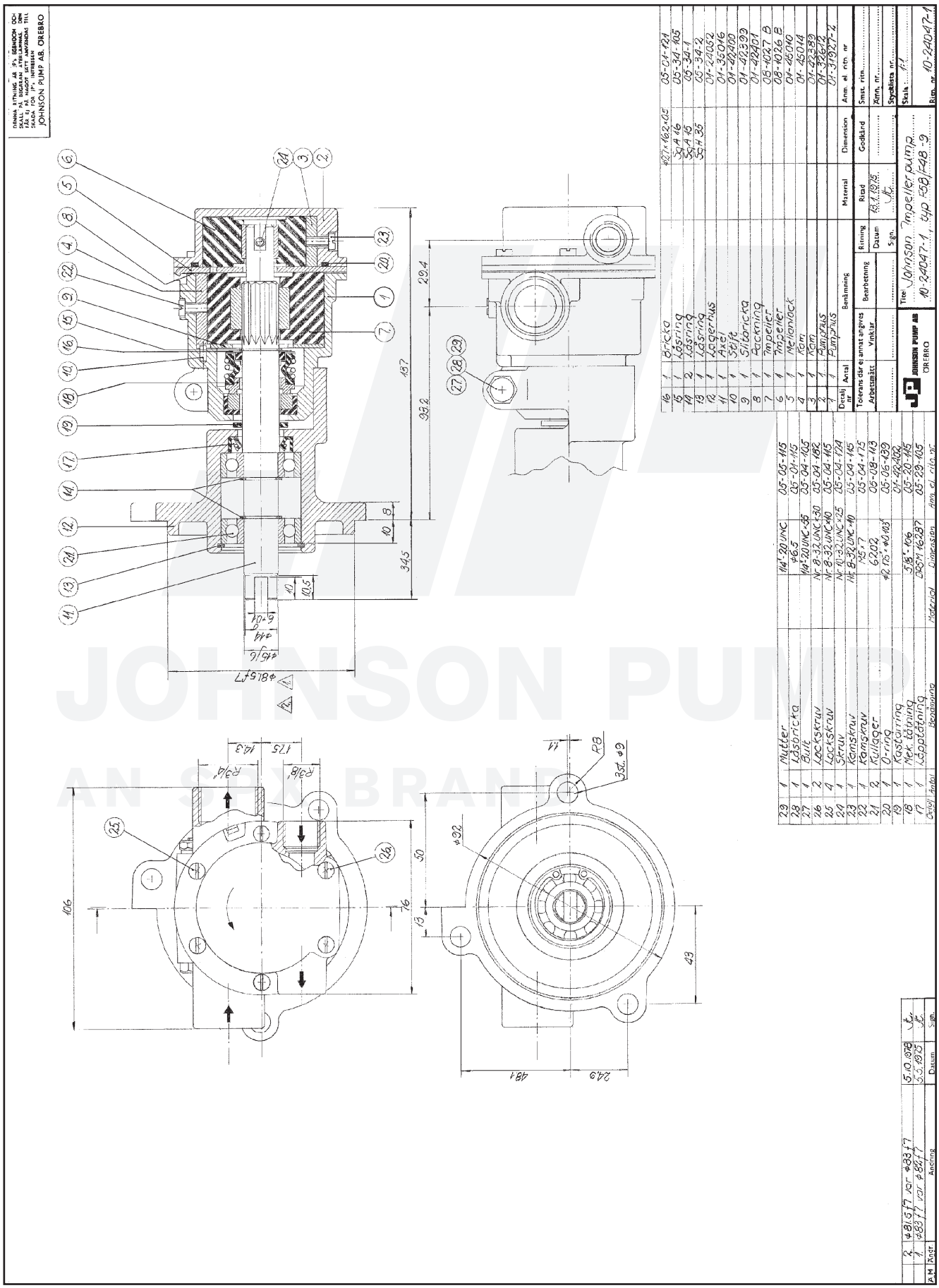
JOHNSON PUMP AB. ÖREBRO
Johnson impeller pump
10-24047-1 typ F5B/F4B-9
Material
Dimension
Anm. el. rit. nr
Smst. rit.
Godkänd
Riad
Material
Benämning
Bearbetning
Rimning
Vinklar
Tolerans där ej annat angives
Arbetsskärt
Datum
Sign.
Titel
Stala 1:1
Rim. nr 10-24047-1
Mutter
Lösbricka
Bult
Lockskruv
Lockskruv
Skruv
Kamskruv
Kamskruv
Kullager
O-ring
Kastlänning
Mek tätning
Kapotetning
Beteckning
Material
Dimension
Anm. el. rit. nr
Anstring
Datum
Sign.
Pos
Antal
Benämning
Material
Dimension
Anm. el. rit. nr
Brickа
Lösring
Lösring
Lösring
Lagerhus
Axel
Sätet
Stiftbricka
Packning
Impeller
Mellanlock
Kam
Pumphus
Pumphus
Pumphus

10-13064 pump F7B/F9B

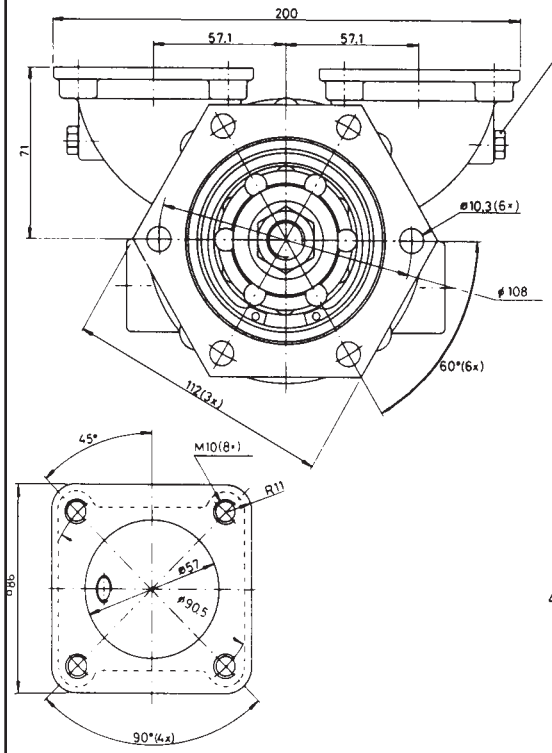

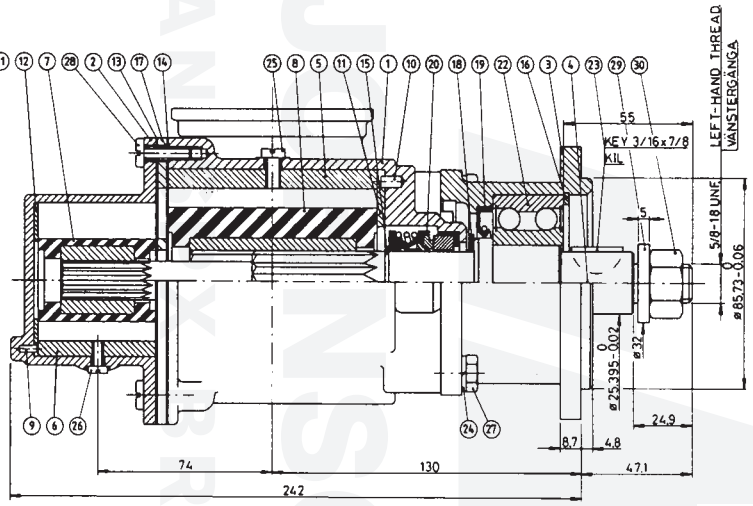

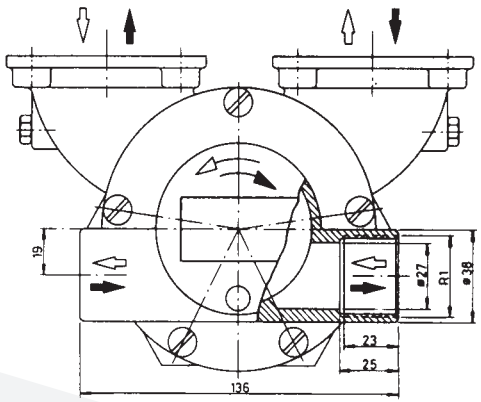

Pump nr / Pump no	Pump typ / Pump type	Märkning på pumphus / Marking on body (2)
10-13064-1	F7B/F9B-9	Pump typ = 50.06500-7012 + tillv. år + vecka / Pump type = 50.06500-7012 + mon. year + week
10-13064-2	F7B/F9B-9	Pump typ + Pump nr + tillv. år + vecka / Pump type + Pump no + mon. year + week

F9B-9 / F7B-9 Impeller Pump
Art. No. 13064-2

Part no.	Description GB	Position	Quantity
01-13003	BODY F9B	1	1
01-24245	BODY F9B/F7B-9	2	1
01-24246	BEARING HOUSING F7/F8/F9B-9	3	1
01-35214	SHAFT F9B/F7B-9	4	1
01-43137	CAM 1/1 F9B-	5	1
01-42679	CAM 1/1 F7B/F70B	6	1
08-1028B	IMPELLER	7	1
08-802B	IMPELLER	8	1
01-42400	PIN F35B-/F7B/F70B	9	1
01-42426	PIN	10	1
01-42423	WEARPLATE F8/F80/F9/F95B-	11	1
01-42443	WEARPLATE F7B/F70B	12	1
01-45758	GASKET F9B/F7B-9	13	1
01-42424	GASKET F8B/F9B-	14	1
0.0370.525	EXT. CIRCLIP D25 DIN471 ST	15	1
0.0371.072	RETAIN. RING BORE D72 DIN472 SPRST	16	1
01-45755	WASHER F9B/F7B-9	17	1
01-42427-15	SLINGER F8/F9B-	18	1
0.2233.016	LIP SEAL 36X62X7 DPSM	19	1
0.2247.051	MECH.SEAL COMPL 1" 106BT2C1	20	1
0.3431.701	ANGLE CONTACT BEARING 3306 2Z	22	1
01-46352	KEY	23	1
0.0353.309	SPRINGWASH D8.2 DIN127 STZN	24	4
01-46794-02	SCREW 1/4"-20UNCX10 AL.BRONZE	25	1
01-46794-01	SCREW 12-24UNCX9.5 BRASS	26	1
0.0144.002	BOLT 5/16"-18UNCX20 SS1943	27	4
0.0148.001	SCREW 1/4"-20UNCX19 SS1956	28	5
01-46789-05	WASHER D17XD32X5 STZN	29	1
0.0193.001	NUT 5/8"-18UNF LEFT SS1990	30	1

POS	Ändring / Revision	950.22	IG	RJ
POS	Märkning enligt 10-13064-1 / 10-13064-2 ändrad	521012	RJ	DR
POS	Ändr. [illegible]	[illegible]	AS	RJ
	Justerering 95.08.549 enligt 03.08.545	03.06.09	JV	

Tillverkas för ej annat angivet / Arbetsmärkt	Vinkler	Beskrivning	Riktning / Datum / Sign	Ritad 84-06-25 L.S.	Godkänd
JOHNSON PUMP AB		Titel JOHNSON IMPELLERPUMP F7B/F9B			Skala 1:1 10-13064

JOHNSON PUMP
ANKER RAD

F75B/ F7B-9 Impeller pump
Art. No. 10-13142-02

Part no.	Description GB	Position	Quantity
01-13123-1	BODY F75B-9	1	1
01-46146	CAM 1/1 F75B	2	1
08-821B	IMPELLER F75B	3	1
01-35702	SHAFT F75B/F7B-9	4	1
01-46361	WASHER F75B/F7B-9	5	1
01-46286	GASKET F75B	6	1
01-42443	WEARPLATE F7B/F70B	7	2
01-42400	PIN F35B-/F7B/F70B	8	1
01-24439-1	BEARING HOUSING F75B/F7B-9	9	1
01-46284-2	SPACER F75B-9	10	1
01-42427-15	SLINGER F8/F9B-	11	1
0.0370.525	EXT. CIRCLIP D25 DIN471 ST	12	2
0.0371.062	RETAIN. RING BORE D62 DIN472 SPRST	13	1
01-46790-02	WASHER D8.2XD14X1 CU	14	1
0.2247.008	MECH.SEAL COMPL FA25.47.14	15	1
0.2233.351	LIP SEAL 25X47X10/7	16	1
0.3431.001	BALL BEARING 6205 2 RS C3 ST	17	1
0.3431.044	BALL BEARING 6305 2RS C3 ST	18	1
0.0138.921	TAP BOLT M5X16 M DIN933 A4	19	6
01-46794-12	SCREW M8X12 AL.BRONZE	20	1
0.0141.918	TAP BOLT M8X25 DIN933 8.8ZP	21	4
0.0353.309	SPRINGWASH D8.2 DIN127 STZN	22	4
01-24437-1	BODY F75B/F7B-9	23	1
01-42679	CAM 1/1 F7B/F70B	24	1
08-1028B	IMPELLER	25	1
01-46794-01	SCREW 12-24UNCX9.5 BRASS	26	1
01-46362	GASKET F75B/F7B-9	27	1
01-46291	GASKET F75B-9	0	1

The product, i.e. concept, design and construction, is the property of SPX Johnson Pump Marine AB

10-13142 pump F75B-9/F7B-9

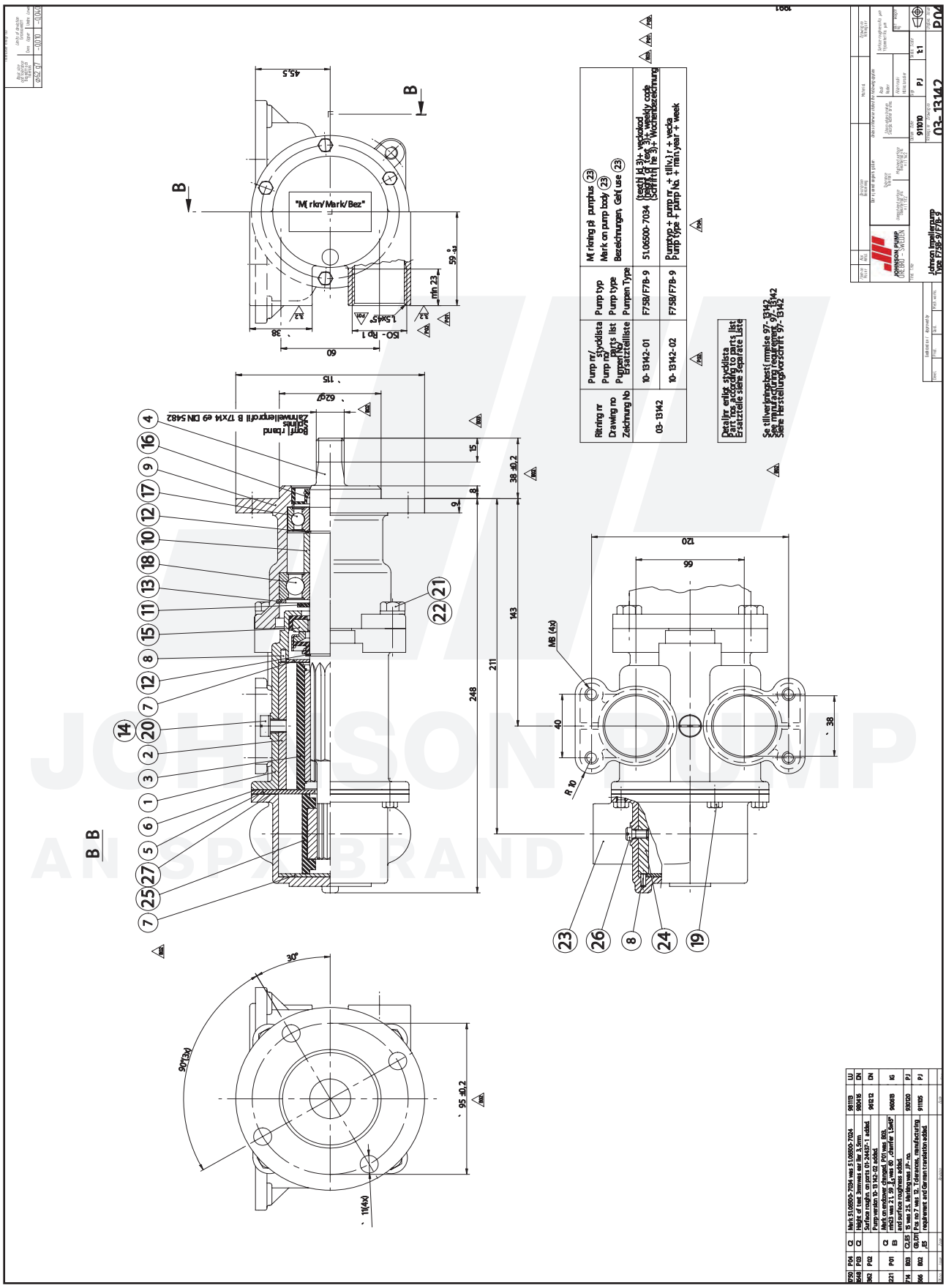

JOHNSON PUMP
AN SPX BRAND

Deck wash & bilge pumps

Clutch Pumps

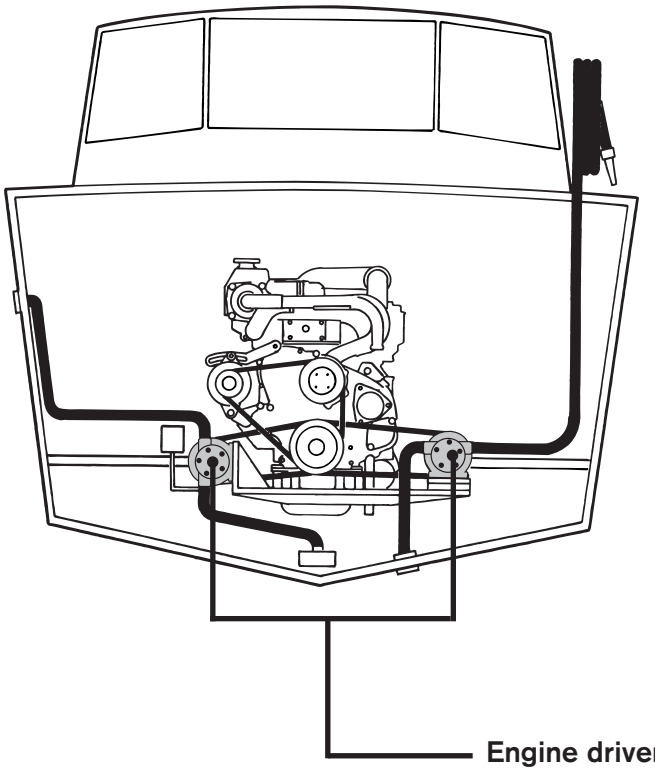

Engine driven clutch pumps for deck wash and for bilge, -5000/5001 series

Heavy duty self-priming pumps, which offers high flow rates and can handle bilge debris without damaging the pumps. Supplied with electro-magnetic clutch for remote or automatic control . *Must not be run dry.*

When the impeller pumps are intended for use as bilge pumps Johnson vacuum switch 09-45053 should be installed. The vacuum switch can be operated either manually or automatically.

Deck wash & bilge pumps

Clutch Pumps, -5000/5001 serie

Pump	Art. No.	Page
F7B-5001	10-24071	356
F7B-5000	10-24116	357
F7B-5001 MC	10-24556	359
F7B-5001	10-24577	361
F7B-MC	10-24578	363
F8B-5001	10-13022	365
F8B-5	10-24160	367
F8B-5000	10-13025	369
F8B-5001 MC	10-24559	371
F8B-5000-TSS	10-13176	373
F9B-5000	10-13027	375
F95B-5000	10-13143	377
F9B-5600-TSS	10-13178	379
F9B-5600	10-13226	381
F9B-5	10-24161	383

10-24071 pump F7B-5001

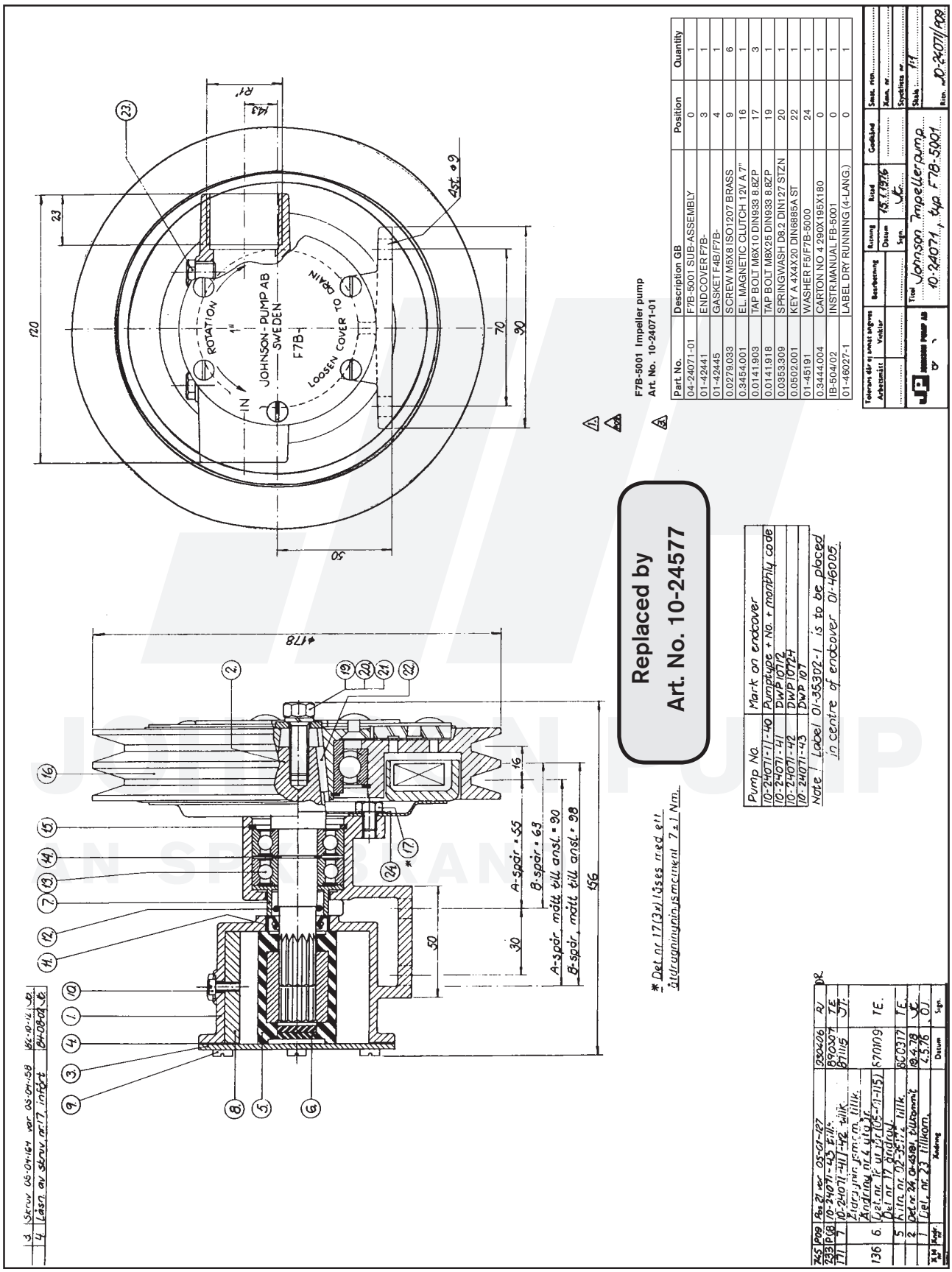

Part. No.	Description GB	Position	Quantity
04-24071-01	F7B-5001 SUB-ASSEMBLY	0	1
01-42441	ENDCOVER F7B-	3	1
01-42445	GASKET F4B/F7B-	4	1
0.0279.033	SCREW M6X8 ISO1207 BRASS	9	6
0.3454.001	EL. MAGNETIC CLUTCH 12V A 7"	16	1
0.0141.903	TAP BOLT M6X10 DIN933 8.8ZP	17	3
0.0141.918	TAP BOLT M8X25 DIN933 8.8ZP	19	1
0.0353.309	SPRINGWASH D8.2 DIN127 STZN	20	1
0.0502.001	KEY A 4X4X20 DIN6885A ST	22	1
01-45191	WASHER F5/F7B-5000	24	1
0.3444.004	CARTON NO 4 290X195X180	0	1
IB-504/02	INSTR.MANUAL FB-5001	0	1
01-46027-1	LABEL DRY RUNNING (4-LANG.)	0	1

JOHNSON PUMP
AN SPX BRAND

The product, i.e. concept, design and construction, is the property of SPX Johnson Pump Marine AB

10-24116 pump F7B-5000

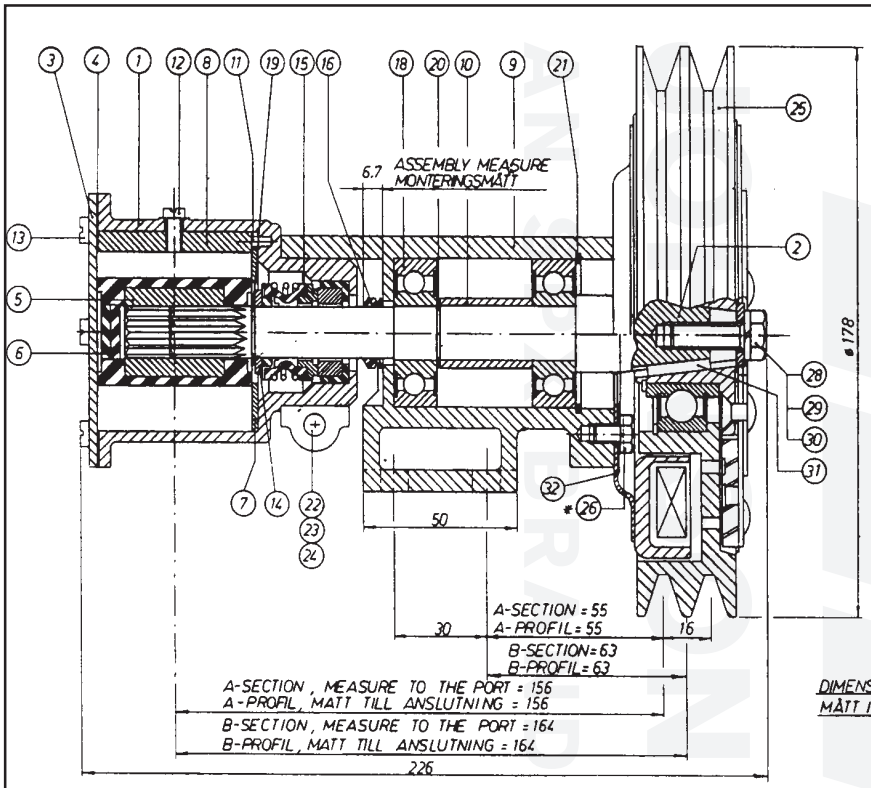

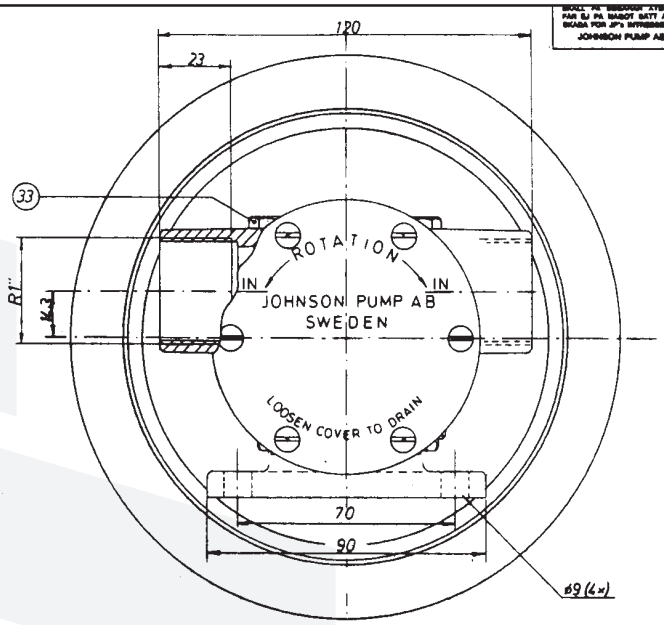

DIMENSIONS IN mm.
MÅTT I mm.

*DET. NO. 26 (3x) TO BE LOCKED WITH A TIGHTENING MOMENT OF 7±1 Nm

*DET. NR. 26 (3x) LÅSES MED ETT ÅTDRAGNINGSMOMENT, 7±1 Nm

F7B-5000 Impeller pump
Art. No. 10-24116-01

Part. No.	Description GB	Position	Quantity
08-1028B	IMPELLER	5	1
0.0194.001	NUT 1/4"-20UNC SS1989 8.8ZN	24	1
0.0353.402	WASHER D6,5 X D11,8 X1,6	23	1
0.0144.001	BOLT 1/4"-20UNCX57 SS1943 STZN	22	1
0.0371.047	RETAIN. RING BORE D47 DIN472 SPRST	21	1
0.0370.017	EXT. CIRCLIP D17 DIN471 ST	20	1
0.0370.516	EXT. CIRCLIP D16 DIN471 PHB	19	1
0.3431.778	BALL BEARING 6303-2RSH	18	2
0.2230.015	V-RING 15.5-17.5 NBR/65SH	16	1
0.2247.050	MECH.SEAL COMPL 5/8" 106BT2C1	15	1
01-45174	WASHER F7B-3000/-5000	14	1
01-42400	PIN F35B-/F7B/F70B	11	1
01-45170	SPACER F5B/F7B-3000/-5000	10	1
01-24098	PEDESTAL F5B/F7B-5000	9	1
01-42443	WEARPLATE F7B/F70B	7	1
01-35084	SHAFT F5/F7B-5000	2	1
01-46794-01	SCREW 12-24UNCX9.5 BRASS	12	1
01-42679	CAM 1/1 F7B/F70B	8	1
01-21862-3	BODY F7B-5000	1	1
01-46794-05	SCREW 10-32UNFX8 BRASS	13	6
01-42445	GASKET F4B/F7B-	4	1
01-42441	ENDCOVER F7B-	3	1
0.3454.001	EL. MAGNETIC CLUTCH 12V A 7"	25	1
0.0502.001	KEY A 4X4X20 DIN6885A ST	31	1
0.0353.309	SPRINGWASH D8.2 DIN127 STZN	29	1
0.0141.918	TAP BOLT M8X25 DIN933 8.8ZP	28	1
0.0141.903	TAP BOLT M6X10 DIN933 8.8ZP	26	3
01-45191	WASHER F5/F7B-5000	32	1

Ändr. nr	Ändring	Datum	Sign.
P07	Pos 30 utg. 05-01-127 Åtdragningsmoment tillk.	930406	RJ
P.6	Det. nr 26 ändrad Det. nr. 27 utgår 05-01-115	870112	TE.
5	Rätn. nr 02-35173 tillk.	860317	TE.
4.	Kullager 05-08-22 var 05-08-21	25.4.83	
3.	Läppätn. 05-29-131 utgår (17)		
2.	Plugg 05-03-122 tillkommit	22.10.1979	
1.	Pumphus 01-21862-3 var 01-21862-2		
	Det. nr 32, 01-45191, tillkommit	19.4.1978	

PUMPTYP OCH PUMP NR STÄMPLAS PÅ LOCKET.

Tolerans där ej annat angivet		Bearbetning	Ritning	Ritad	Godkänd	Smpl. rätn.
Arbetsmått	Vinklar		Datum	771114		Ärsn. nr
			Sign.	OJ		Styckliste nr
JP OR		Titel: JOHNSON IMPELLERPUMP 10-24116, TYP F7B-5000				Skala: 1:1
						Rätn. nr 10-24116/P07

F7B-5001 MC Impeller pump
Art No. 10-24556-02

Part No	Description GB	Position	Quantity
04-35879-2	PUMP BODY F7B MC SUB ASSEMBLY	1	1
01-35865	SHAFT F7B-5001/50017 MC	2	1
01-42441	ENDCOVER F7B-	3	1
08-1028B	IMPELLER	4	1
01-42445	GASKET F4B/F7B-	5	1
01-42679	CAM 1/1 F7B/F70B	6	1
01-45046	PLATE F5/F7B-8/-5001	7	1
0.0279.033	SCREW M5X8 ISO1207 BRASS	8	6
01-46794-01	SCREW 12-24UNCX9.5 BRASS	9	1
0.2233.001	LIP SEAL 16X28X7 DPSM	10	1
0.2173.402	O-RING 15.3X2.4 SS1586 NBR70	11	1
0.3431.742	BALL BEARING 6203 2 RS1 ST	12	2
0.0371.040	RETAIN. RING BORE D40 DIN472 SPRST	13	1
0.0370.017	EXT. CIRCLIP D17 DIN471 ST	14	1
01-46027-1	LABEL DRY RUNNING (4-LANG.)	15	1
01-35876	CLUTCH CARRIER	16	1
01-46732	DISTANCE RING F7B MC	17	1
01-46730	SPRING F7B/F8B MC	18	1
01-35867	SHAFT HUB	19	1
01-35863	PULLEY	20	1
01-46712	PIN F7B/F8B MC	21	3
01-35864	CLUTCH CONE	22	1
01-46709	SPRING	23	1
01-46713	SPRING HOLDER F7B/F8B MC	24	1
01-46714	SLEEVE F7B/F8B MC	25	2
0.3447.001	LEVER GN310 AN 125-M10	26	1
0.3433.001	BALL RB-7.5G20 ISO3290-1975 ST	27	1
0.0502.025	KEY A 6X6X25 DIN6885A ST	28	2
0.3431.740	BALL BEARING 6008-2RS1	29	1
0.0370.040	EXT. CIRCLIP D40 DIN471 ST	30	1
0.0371.068	RETAIN. RING BORE D68 DIN472 SPRST	31	1
0.0356.002	WASHER D8.4XD26X5 SS1466 STZN	32	1
0.0141.915	TAP BOLT M8X14 DIN933 8.8ZN	33	1
0.0141.918	TAP BOLT M8X25 DIN933 STZN	34	2
0.0300.742	SET SCREW M6X6 DIN916 A2	35	1

F7B-5001 MC Impeller pump
Art No. 10-24556-01

Part No	Description GB	Position	Quantity
04-35895-1	PUMP BODY F7B MC SUB ASSEMBLE	1	1
01-35865	SHAFT F7B-5001/50017 MC	2	1
01-42441	ENDCOVER F7B-	3	1
08-1028B	IMPELLER	4	1
01-42445	GASKET F4B/F7B-	5	1
01-42679	CAM 1/1 F7B/F70B	6	1
01-45046	PLATE F5/F7B-8/-5001	7	1
0.0279.033	SCREW M5X8 ISO1207 BRASS	8	6
01-46794-01	SCREW 12-24UNCX9.5 BRASS	9	1
0.2233.001	LIP SEAL 16X28X7 DPSM	10	1
0.2173.402	O-RING 15.3X2.4 SS1586 NBR70	11	1
0.3431.742	BALL BEARING 6203 2 RS1 ST	12	2
0.0371.040	RETAIN. RING BORE D40 DIN472 SPRST	13	1
0.0370.017	EXT. CIRCLIP D17 DIN471 ST	14	1
01-46027-1	LABEL DRY RUNNING (4-LANG.)	15	1
01-35876	CLUTCH CARRIER	16	1
01-46732	DISTANCE RING F7B MC	17	1
01-46730	SPRING F7B/F8B MC	18	1
01-35867	SHAFT HUB	19	1
01-35863	PULLEY	20	1
01-46712	PIN F7B/F8B MC	21	3
01-35864	CLUTCH CONE	22	1
01-46709	SPRING	23	1
01-46713	SPRING HOLDER F7B/F8B MC	24	1
01-46714	SLEEVE F7B/F8B MC	25	2
0.3447.001	LEVER GN310 AN 125-M10	26	1
0.3433.001	BALL RB-7.5G20 ISO3290-1975 ST	27	1
0.0502.025	KEY A 6X6X25 DIN6885A ST	28	2
0.3431.740	BALL BEARING 6008-2RS1	29	1
0.0370.040	EXT. CIRCLIP D40 DIN471 ST	30	1
0.0371.068	RETAIN. RING BORE D68 DIN472 SPRST	31	1
0.0356.002	WASHER D8.4XD26X5 SS1466 STZN	32	1
0.0141.915	TAP BOLT M8X14 DIN933 8.8ZN	33	1
0.0141.918	TAP BOLT M8X25 DIN933 STZN	34	2
0.0300.742	SET SCREW M6X6 DIN916 A2	35	1

JOHNSON PUMP
A SPX BRAND

The product, i.e. concept, design and construction, is the property of SPX Johnson Pump Marine AB

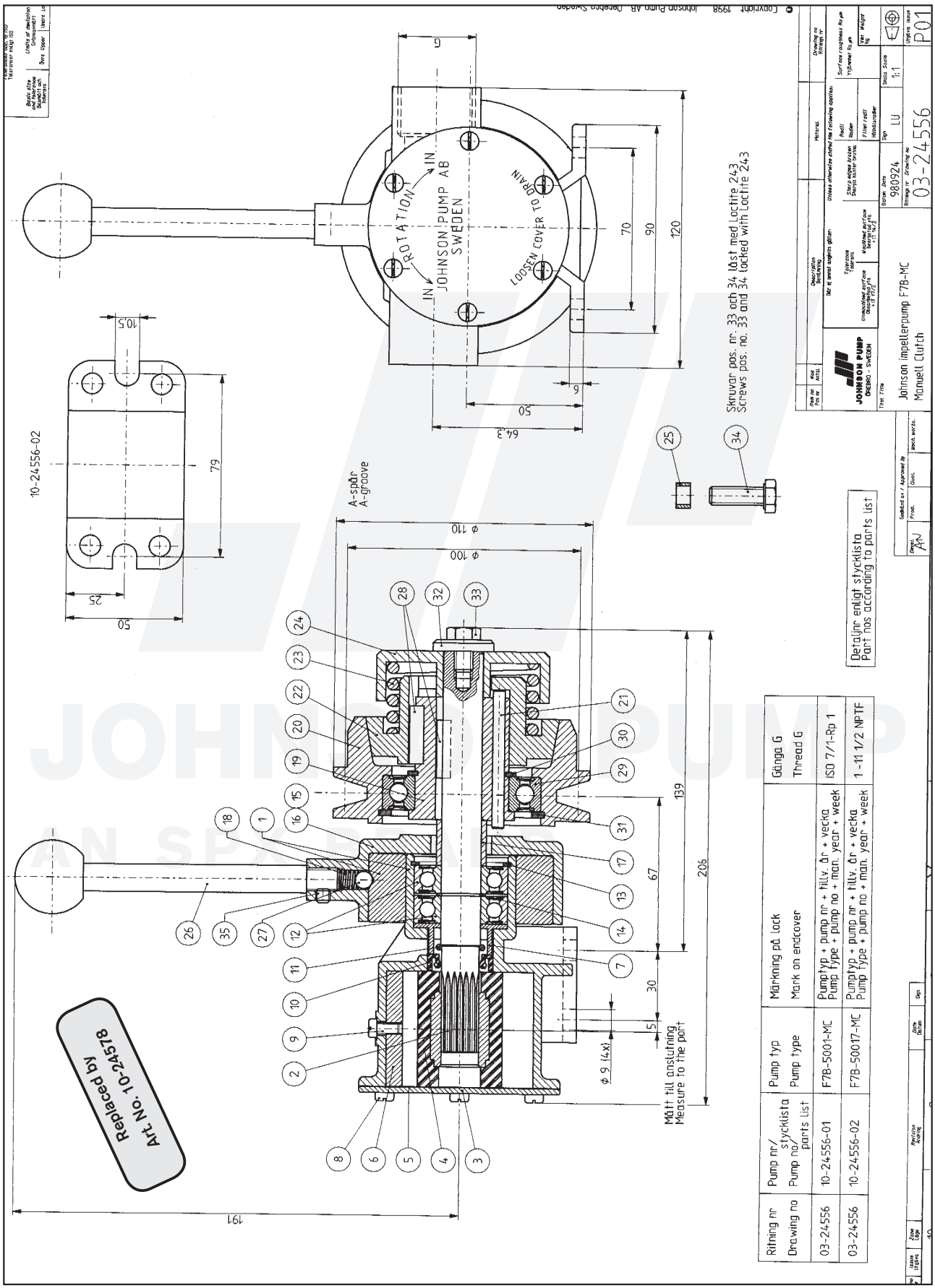

JOHNSON PUMP
AN SPX BRAND

F7B-5001 Impeller pump
Art. No. 10-24577-99

Part no.	Description GB	Position	Quantity
01-24574-1	BODY F7B-5001	1	1
01-46745	SHAFT F7B-5001	2	1
01-46648-3	ENDCOVER F7B	3	1
08-1028B	IMPELLER	4	1
01-42679	CAM 1/1 F7B/F70B	5	1
01-42400	PIN F35B-/F7B/F70B	6	1
01-46798-2	WEAR PLATE F7B	7	1
01-45680	WASHER F5B/F6B/F7B	8	1
01-46009	SPACER F7B-9	9	1
0.0279.301	SCREW M5X8 ISO1207 A4	10	6
01-46794-01	SCREW 12-24UNCX9.5 BRASS	11	1
0.2172.012	O-RING 63,22X1,78 NBR70	12	1
0.2173.402	O-RING 15.3X2.4 SS1586 NBR70	13	1
0.3431.742	BALL BEARING 6203 2 RS1 ST	14	2
0.2247.022	MECH.SEAL COMPL D16	15	1
0.0371.040	RETAIN. RING BORE D40 DIN472 SPRST	16	1
0.0370.017	EXT. CIRCLIP D17 DIN471 ST	17	1
0.0370.516	EXT. CIRCLIP D16 DIN471 PHB	18	1
01-46797	LABEL	19	1
09-46436	ASS. KIT F. CLUTCH F5/F7	27	1

The product, i.e. concept, design and construction, is the property of SPX Johnson Pump Marine AB

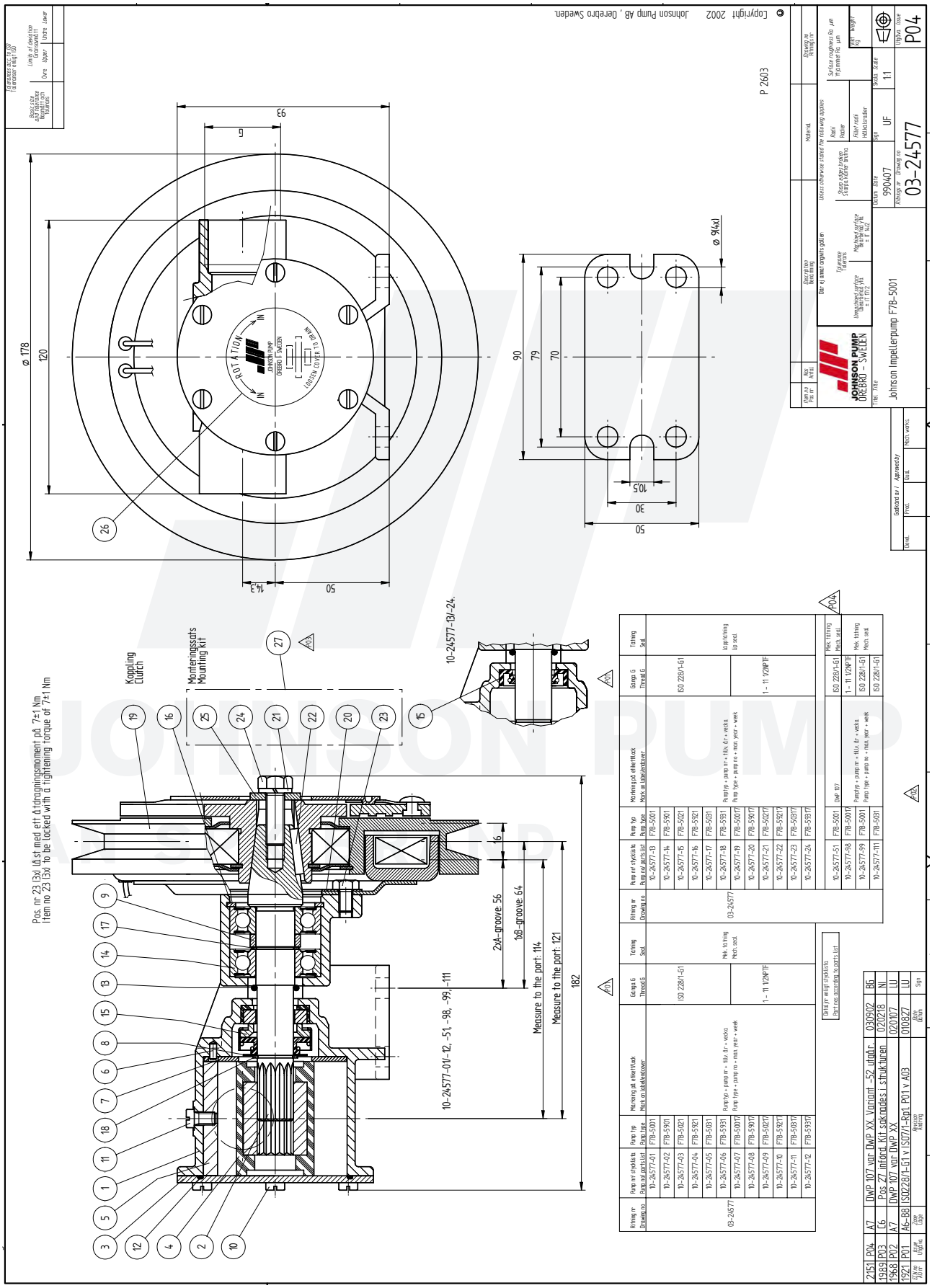

JOHNSON PUMP
ARE GENUINE

Deck wash & bilge

F7B-5001 MC Impeller pump
Art. No. 10-24578-03

Part No.	Description GB	Position	Quantity
04-35895-1	PUMP BODY F7B MC SUB ASSEMBLE	1	1
01-35894	SHAFT F7B-8-MC	2	1
01-46648-3	ENDCOVER F7B	3	1
08-1028B	IMPELLER	4	1
01-42400	PIN F35B-/F7B/F70B	5	1
01-42679	CAM 1/1 F7B/F70B	6	1
01-46798-2	WEAR PLATE F7B	7	1
01-45680	WASHER F5B/F6B/F7B	8	1
01-46009	SPACER F7B-9	9	1
0.0279.301	SCREW M5X8 ISO1207 A4	10	6
01-46794-01	SCREW 12-24UNCX9.5 BRASS	11	1
0.2247.022	MECH.SEAL COMPL D16	12	1
0.2172.012	O-RING 63,22X1,78 NBR70	13	1
0.2173.402	O-RING 15.3X2.4 SS1586 NBR70	14	1
0.3431.742	BALL BEARING 6203 2 RS1 ST	15	2
0.0371.040	RETAIN. RING BORE D40 DIN472 SPRST	16	1
0.0370.017	EXT. CIRCLIP D17 DIN471 ST	17	1
0.0370.516	EXT. CIRCLIP D16 DIN471 PHB	18	1
01-46027-1	LABEL DRY RUNNING (4-LANG.)	19	1
01-35876	CLUTCH CARRIER	20	1
01-46732	DISTANCE RING F7B MC	21	1
01-46730	SPRING F7B/F8B MC	22	1
01-35867	SHAFT HUB	23	1
01-35863	PULLEY	24	1
01-46712	PIN F7B/F8B MC	25	3
01-35864	CLUTCH CONE	26	1
01-46709	SPRING	27	1
01-46713	SPRING HOLDER F7B/F8B MC	28	1
01-46714	SLEEVE F7B/F8B MC	29	2
0.3447.001	LEVER GN310 AN 125-M10	30	1
0.3433.001	BALL RB-7.5G20 ISO3290-1975 ST	31	1
0.0502.025	KEY A 6X6X25 DIN6885A ST	32	2
0.3431.740	BALL BEARING 6008-2RS1	33	1
0.0370.040	EXT. CIRCLIP D40 DIN471 ST	34	1
0.0371.068	RETAIN. RING BORE D68 DIN472 SPRST	35	1
0.0356.002	WASHER D8.4XD26X5 SS1466 STZN	36	1
0.0141.915	TAP BOLT M8X14 DIN933 8.8ZN	37	1
0.0141.918	TAP BOLT M8X25 DIN933 STZN	38	2
0.0300.742	SET SCREW M6X6 DIN916 A2	39	1
01-46797	LABEL	40	1

F7B-50017 MC Impeller pump
Art. No. 10-24578-04

Part No.	Description GB	Posotion	Quantity
04-35895-2	PUMP BODY F7B MC SUB ASSEMBLY	1	1
01-35894	SHAFT F7B-8-MC	2	1
01-46648-3	ENDCOVER F7B	3	1
08-1028B	IMPELLER	4	1
01-42400	PIN F35B-/F7B/F70B	5	1
01-42679	CAM 1/1 F7B/F70B	6	1
01-46798-2	WEAR PLATE F7B	7	1
01-45680	WASHER F5B/F6B/F7B	8	1
01-46009	SPACER F7B-9	9	1
0.0279.301	SCREW M5X8 ISO1207 A4	10	6
01-46794-01	SCREW 12-24UNCX9.5 BRASS	11	1
0.2247.022	MECH.SEAL COMPL D16	12	1
0.2172.012	O-RING 63,22X1,78 NBR70	13	1
0.2173.402	O-RING 15.3X2.4 SS1586 NBR70	14	1
0.3431.742	BALL BEARING 6203 2 RS1 ST	15	2
0.0371.040	RETAIN. RING BORE D40 DIN472 SPRST	16	1
0.0370.017	EXT. CIRCLIP D17 DIN471 ST	17	1
0.0370.516	EXT. CIRCLIP D16 DIN471 PHB	18	1
01-46027-1	LABEL DRY RUNNING (4-LANG.)	19	1
01-35876	CLUTCH CARRIER	20	1
01-46732	DISTANCE RING F7B MC	21	1
01-46730	SPRING F7B/F8B MC	22	1
01-35867	SHAFT HUB	23	1
01-35863	PULLEY	24	1
01-46712	PIN F7B/F8B MC	25	3
01-35864	CLUTCH CONE	26	1
01-46709	SPRING	27	1
01-46713	SPRING HOLDER F7B/F8B MC	28	1
01-46714	SLEEVE F7B/F8B MC	29	2
0.3447.001	LEVER GN310 AN 125-M10	30	1
0.3433.001	BALL RB-7.5G20 ISO3290-1975 ST	31	1
0.0502.025	KEY A 6X6X25 DIN6885A ST	32	2
0.3431.740	BALL BEARING 6008-2RS1	33	1
0.0370.040	EXT. CIRCLIP D40 DIN471 ST	34	1
0.0371.068	RETAIN. RING BORE D68 DIN472 SPRST	35	1
0.0356.002	WASHER D8.4XD26X5 SS1466 STZN	36	1
0.0141.915	TAP BOLT M8X14 DIN933 8.8ZN	37	1
0.0141.918	TAP BOLT M8X25 DIN933 STZN	38	2
0.0300.742	SET SCREW M6X6 DIN916 A2	39	1
01-46797	LABEL	40	1

JOHNSON PUMP
A SPX BRAND

The product, i.e. concept, design and construction, is the property of SPX Johnson Pump Marine AB

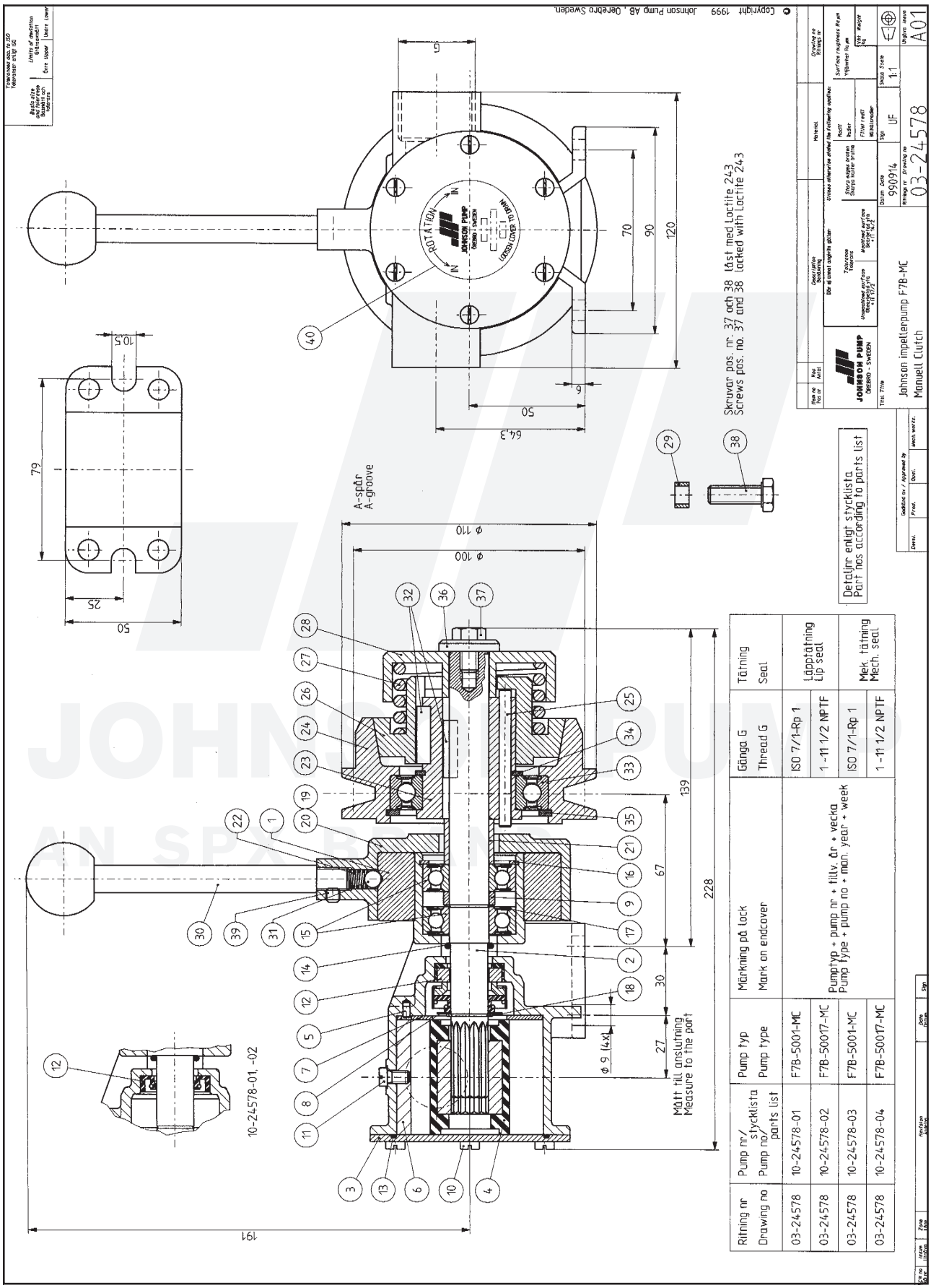
Copyright 1999 Johnson Pump AB, Oerebro Sweden.
ROTATION
IN
OUT DOWN
JOHNSON PUMP
OEREBRO - SWEDEN
LOOSE COVER
Skruvar pos. nr. 37 och 38 låst med Loctite 243
Screws pos. no. 37 and 38 locked with Loctite 243
A-spår
A-groove
Detaljnr enligt stycklista
Part nos according to parts list
Johnson impellerpump F7B-MC
Manuell Clutch
03-24578
A01
10-24578-01, -02
Mått till anslutning
Measure to the port
Märkning på lock
Mark on endcover
Pumptyp + pump nr + tillv. år + vecka
Pump type + pump no + man. year + week
Gänga G
Thread G
Tätning
Seal
Läpptätning
Lip seal
Mek. tätning
Mech. seal
ISO 7/1-Rp 1
1 -11 1/2 NPTF
Pump nr/ stycklista
Pump no/ parts list
Pump typ
Pump type
Ritning nr
Drawing no
03-24578-01 F7B-5001-MC
03-24578-02 F7B-50017-MC
03-24578-03 F7B-5001-MC
03-24578-04 F7B-50017-MC

F8B-5001 Impeller pump w/o clutch
Art. No. 10-13022-99

Service Kit 09-45575

Part. No	Description GB	Position	Quantity
01-13164-1	BODY F8B-8/5001	1	1
01-35136	SHAFT F8B-5001	2	1
01-42680	CAM 1/1 F8B-	3	1
08-819B	IMPELLER F8B-9	4	1
01-42422-1	ENDCOVER F8B/F9B-	5	1
01-42424	GASKET F8B/F9B-	6	1
01-42423	WEARPLATE F8/F80/F9/F95B-	7	1
01-42426	PIN	8	1
01-45374	SPACER F8B-8/-5001	9	1
0.3431.780	BALL BEARING 6305-2RS1	11	2
0.0371.062	RETAIN. RING BORE D62 DIN472 SPRST	12	1
0.0138.134	TAPBOLT M6X12 DIN933 A2	13	5
01-46794-02	SCREW 1/4"-20UNCX10 AL.BRONZE	14	1
0.2247.008	MECH.SEAL COMPL FA25.47.14	17	1
0.0370.525	EXT. CIRCLIP D25 DIN471 ST	18	1
01-35144-2	ADAPTOR F8/F9B-5000	25	1
0.0300.566	SETSCREW M8X12 DIN916 A2	26	3
0.2172.573	O-RING 23.4X3.53 BS1806 NBR70	27	1
0.0370.025	EXT. CIRCLIP D25 DIN471 ST	29	1
09-46437	ASS. KIT F. CLUTCH F8/F9/F95	0	1

Pump type	Part No.	Connection	Seal
F8B-5001	10-13022-99	BSP 1 1/2"	Mechanical Seal
F8B-50017	10-13022-98	NPTF 1 1/2"-11 1/2	Mechanical Seal
F8B-50017	10-13022-96	NPTF 1 1/2"-11 1/2	Mechanical Seal
F8B-50017	10-13022-95	NPTF 1 1/4"-11 1/2	Mechanical Seal

The product, i.e. concept, design and construction, is the property of SPX Johnson Pump Marine AB

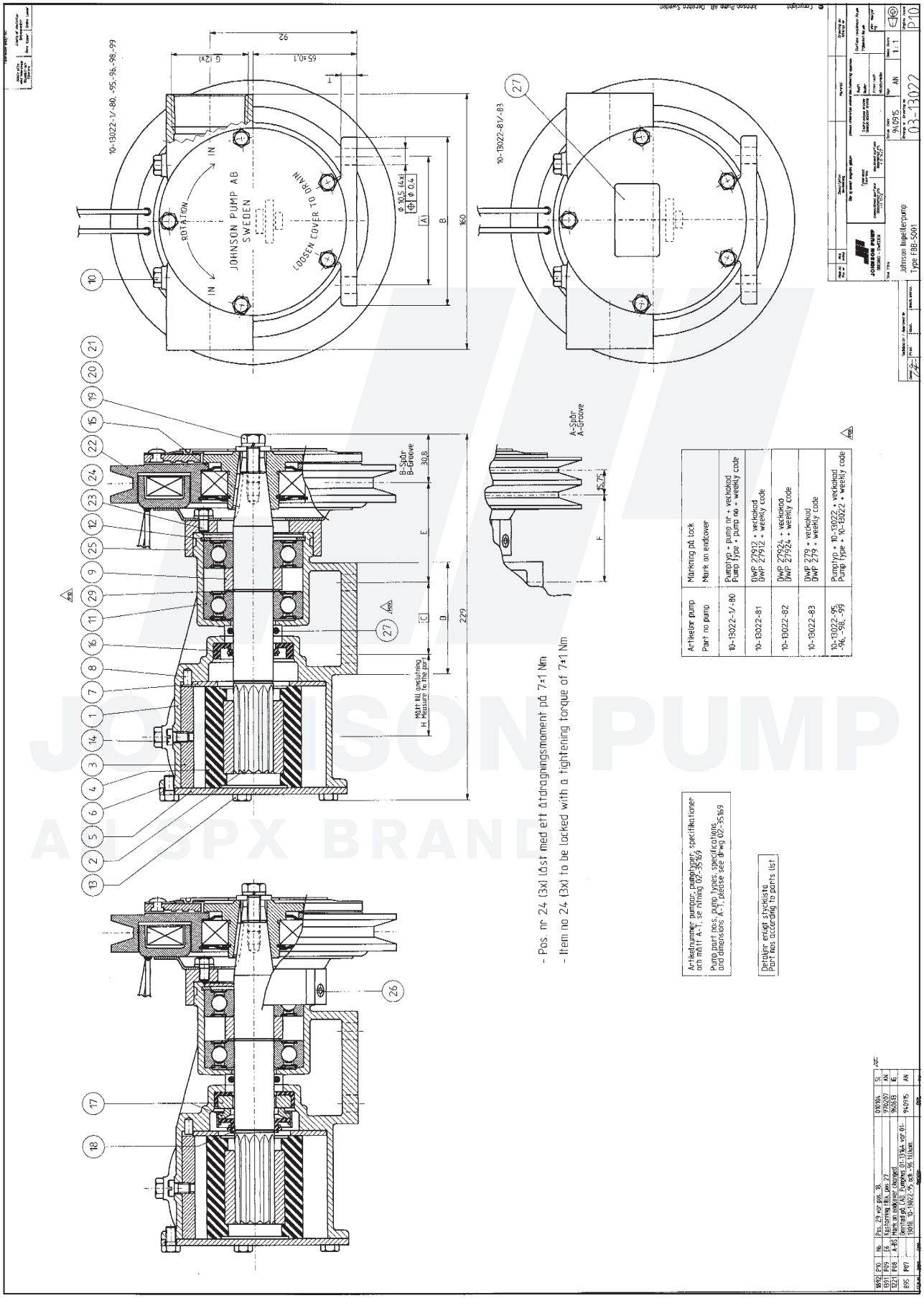

JOHNSON PUMP
AN SPX BRAND

F8B-5 Impeller pump
Art. No. 10-24160-1

Part No.	Description GB	Position	Quantity
01-11206	BODY F8B-	1	1
01-35163-1	ENDCOVER F8B-9/F8B-5 OEM	2	1
01-35138	SHAFT F8/F9B-5000	3	1
01-42680	CAM 1/1 F8B-	4	1
08-1029B	IMPELLER	5	1
01-42424	GASKET F8B/F9B-	6	1
01-42426	PIN	7	1
01-42423	WEARPLATE F8/F80/F9/F95B-	8	1
01-13020	PEDESTAL F8/F9B-3000/-5000	9	1
01-42747	SPACER F8/F9	10	1
01-35144-1	ADAPTOR F8/F9B-5 OEM	11	1
0.2230.319	V-GASKET V 25A NBR70	12	1
0.2247.051	MECH.SEAL COMPL 1” 106BT2C1	13	1
0.3431.780	BALL BEARING 6305-2RS1	14	2
0.0371.062	RETAIN. RING BORE D62 DIN472 SPRST	15	1
0.0370.525	EXT. CIRCLIP D25 DIN471 ST	16	2
0.3454.004	EL. MAGNETIC CLUTCH 24V B 7”	17	1
0.0502.001	KEY A 4X4X20 DIN6885A ST	18	1
0.0353.309	SPRINGWASH D8.2 DIN127 STZN	19	5
0.0141.918	TAP BOLT M8X25 DIN933 8.8ZP	21	1
0.0300.566	SETSCREW M8X12 DIN916 A2	22	3
0.0353.402	WASHER D6,5 X D11,8 X1,6	0	3
0.0141.903	TAP BOLT M6X10 DIN933 8.8ZP	0	3
0.0144.002	BOLT 5/16”-18UNCX20 SS1943	0	4
01-46794-02	SCREW 1/4”-20UNCX10 AL.BRONZE	0	1
0.0144.200	BOLT 1/4”-20UNCX1/2” SS1943 A4	0	5
0.3452.100	SCREWED HOSE JOINT SCHLEMMER	0	1
0.3452.101	HOSE D13XD9.9 SCHLEMMER1200100	0	1
01-46027-1	LABEL DRY RUNNING (4-LANG.)	0	1

The product, i.e. concept, design and construction, is the property of SPX Johnson Pump Marine AB

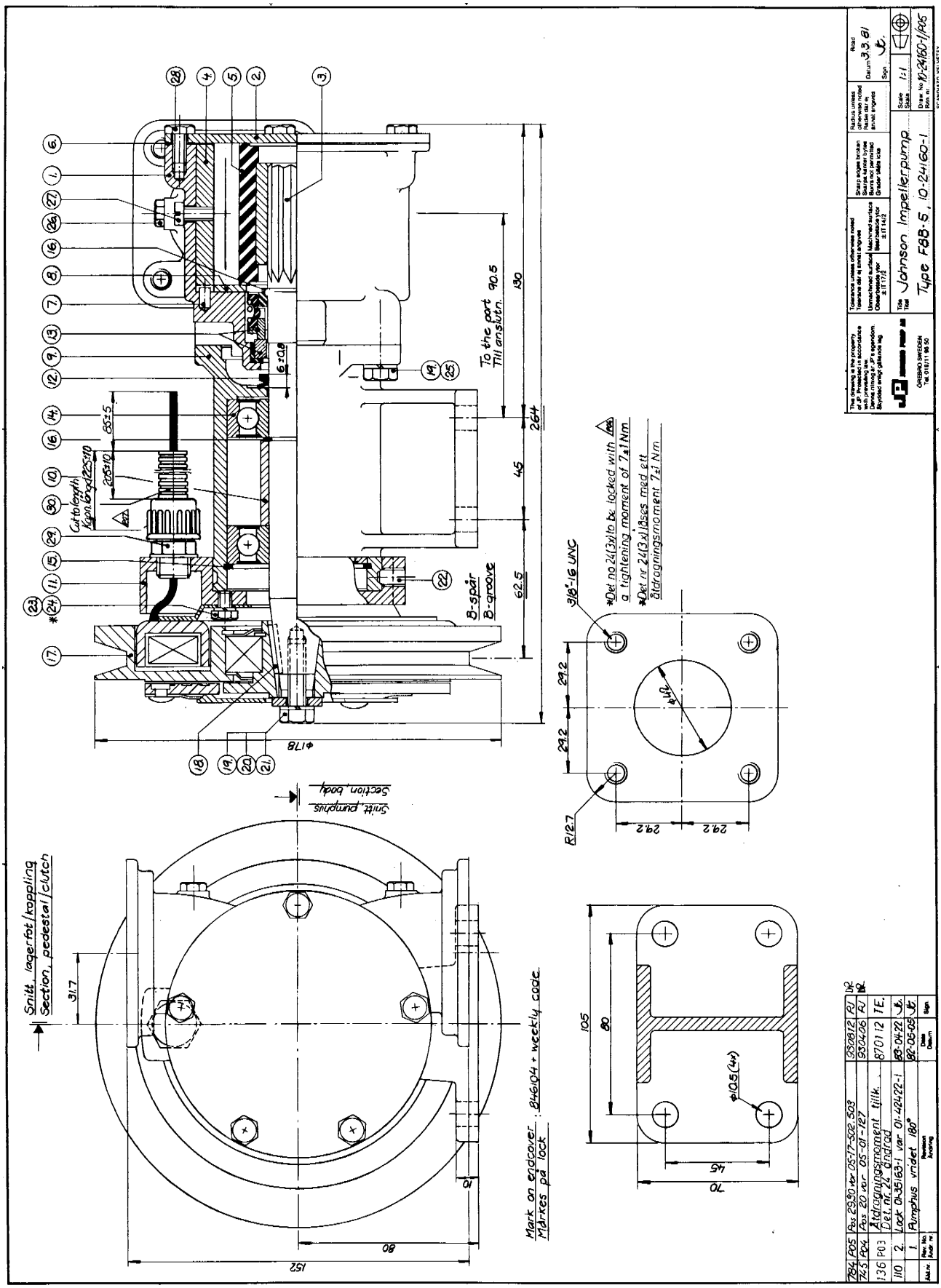
Snitt, lagerfot/koppling
Section, pedestal/clutch
Snitt, pumphus
Section, body
Mark on endcover. B46104 + weekly code
Märkes på lock
To the port
Till anslutn.
B-spår
B-groove
Cut to length
Klipp till
Det nr 24(3x) to be locked with a tightening moment of 7±1 Nm
Det nr 24(3x) låses med ett åtdragningsmoment 7±1 Nm
3/8"-16 UNC
Johnson Impellerpump
Type F8B-5, 10-24160-1
Pumphus vridet 180°
Lock 04-35163-1 var 01-42422-1
Åtdragningsmoment tillk.
Det nr 24 ändrad
Pos 20 var 05-01-127
Pos 29.90 var 05-17-502.503
Rev. No
Ver. nr
Date
Datum
Sign
Scale
Skala
Drw. No
Ritn. nr
10-24160-1/P05
Datum 3.3.81
Sign
OREBRO SWEDEN
Tel. 019/11 95 50

JOHNSON PUMP
AN SPX BRAND

The product, i.e. concept, design and construction, is the property of SPX Johnson Pump Marine AB

10-13025 pump F8B-5000

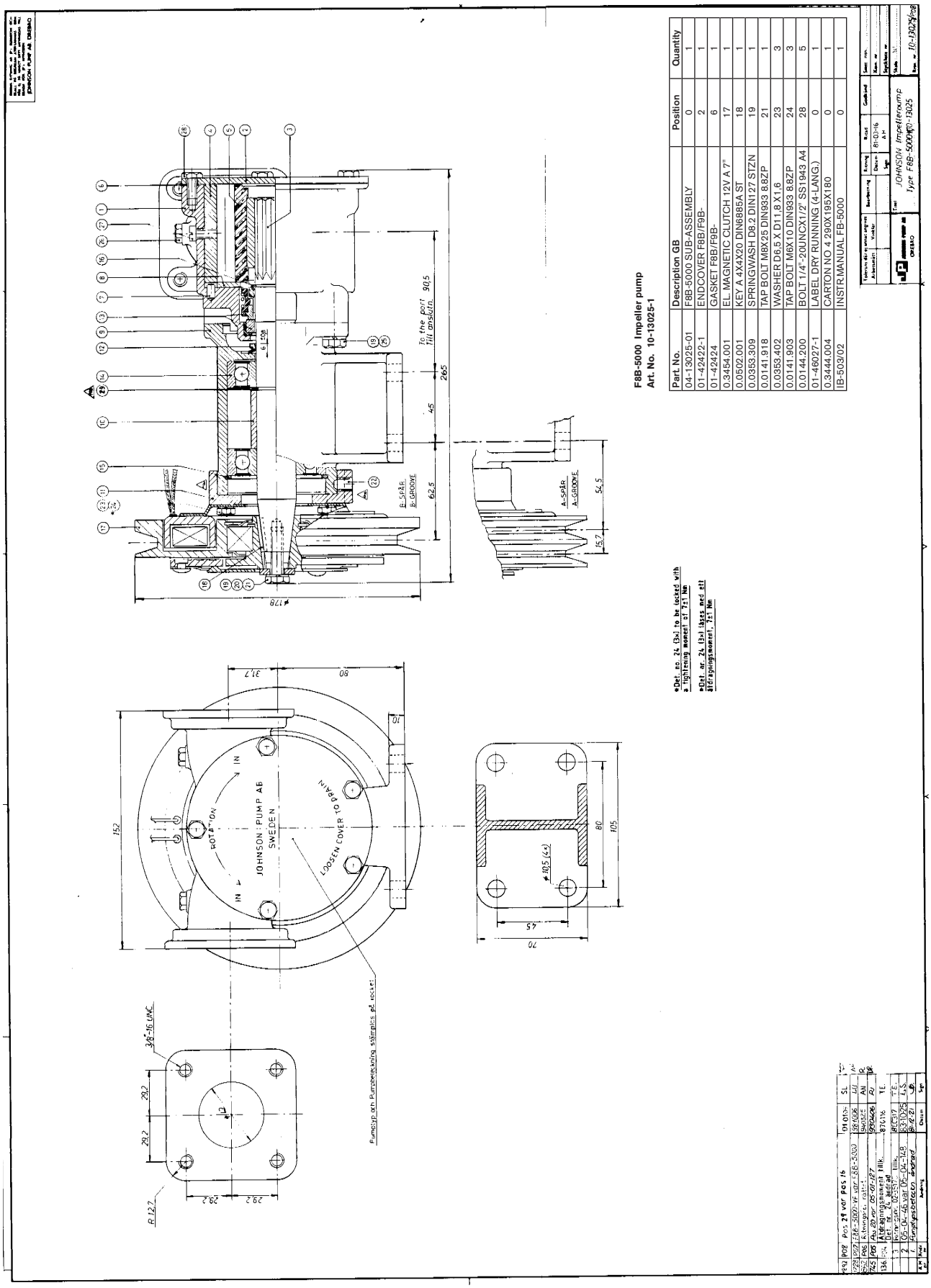

F8B-5000 Impeller pump
Art. No. 10-13025-1

Part. No.	Description GB	Position	Quantity
04-13025-01	F8B-5000 SUB-ASSEMBLY	0	1
01-42422-1	ENDCOVER F8B/F9B-	2	1
01-42424	GASKET F8B/F9B-	6	1
0.3454.001	EL. MAGNETIC CLUTCH 12V A 7"	17	1
0.0502.001	KEY A 4X4X20 DIN6885A ST	18	1
0.0353.309	SPRINGWASH D8.2 DIN127 STZN	19	1
0.0141.918	TAP BOLT M8X25 DIN933 8.8ZP	21	1
0.0353.402	WASHER D6.5 X D11.8 X1.6	23	3
0.0141.903	TAP BOLT M6X10 DIN933 8.8ZP	24	3
0.0144.200	BOLT 1/4"-20UNCX1/2" SS1943 A4	28	5
01-46027-1	LABEL DRY RUNNING (4-LANG.)	0	1
0.3444.004	CARTON NO 4 290X195X180	0	1
IB-503/02	INSTR.MANUAL FB-5000	0	1

*Det. no 24 (3x) to be locked with a tightening moment of 7±1 Nm

*Det. nr 24 (3x) låses med ett åtdragningsmoment, 7±1 Nm

F8B-5001 Impeller pump
Art. No. 10-24559-01

Part no.	Description GB	Position	Quantity
04-35877-1	PUMP BODY F8B MC SUB ASSEMBLE	1	1
01-35875	SHAFT F8B-5001/50017 MC	2	1
01-42680	CAM 1/1 F8B-	3	1
08-819B	IMPELLER F8B-9	4	1
01-42422-1	ENDCOVER F8B/F9B-	5	1
01-42424	GASKET F8B/F9B-	6	1
01-42423	WEARPLATE F8/F80/F9/F95B-	7	1
01-42426	PIN	8	1
01-45374	SPACER F8B-8/-5001	9	1
0.3431.780	BALL BEARING 6305-2RS1	10	2
0.0371.062	RETAIN. RING BORE D62 DIN472 SPRST	11	1
0.0138.134	TAPBOLT M6X12 DIN933 A2	12	5
01-46794-02	SCREW 1/4”-20UNCX10 AL.BRONZE	13	1
0.2247.008	MECH.SEAL COMPL FA25.47.14	14	1
0.0370.525	EXT. CIRCLIP D25 DIN471 ST	15	1
01-46027-1	LABEL DRY RUNNING (4-LANG.)	16	1
0.2172.573	O-RING 23.4X3.53 BS1806 NBR70	17	1
01-35876	CLUTCH CARRIER	18	1
01-46730	SPRING F7B/F8B MC	19	1
01-35867	SHAFT HUB	20	1
01-35863	PULLEY	21	1
01-46712	PIN F7B/F8B MC	22	3
01-35864	CLUTCH CONE	23	1
01-46709	SPRING	24	1
01-46713	SPRING HOLDER F7B/F8B MC	25	1
01-46714	SLEEVE F7B/F8B MC	26	2
0.3447.001	LEVER GN310 AN 125-M10	27	1
0.3433.001	BALL RB-7.5G20 ISO3290-1975 ST	28	1
0.0502.025	KEY A 6X6X25 DIN6885A ST	29	2
0.3431.740	BALL BEARING 6008-2RS1	30	1
0.0370.040	EXT. CIRCLIP D40 DIN471 ST	31	1
0.0371.068	RETAIN. RING BORE D68 DIN472 SPRST	32	1
0.0356.002	WASHER D8.4XD26X5 SS1466 STZN	33	1
0.0141.915	TAP BOLT M8X14 DIN933 8.8ZN	34	3
0.0300.742	SET SCREW M6X6 DIN916 A2	35	1
0.0370.025	EXT. CIRCLIP D25 DIN471 ST	36	1

F8B-50017 Impeller pump
Art. No. 10-24559-02

Part No	Description	Position	Quantity
04-35877-2	PUMP BODY F8B MC SUB ASSEMBLY	1	1
01-35875	SHAFT F8B-5001/50017 MC	2	1
01-42680	CAM 1/1 F8B-	3	1
08-819B	IMPELLER F8B-9	4	1
01-42422-1	ENDCOVER F8B/F9B-	5	1
01-42424	GASKET F8B/F9B-	6	1
01-42423	WEARPLATE F8/F80/F9/F95B-	7	1
01-42426	PIN	8	1
01-45374	SPACER F8B-8/-5001	9	1
0.3431.780	BALL BEARING 6305-2RS1	10	2
0.0371.062	RETAIN. RING BORE D62 DIN472 SPRST	11	1
0.0138.134	TAPBOLT M6X12 DIN933 A2	12	5
01-46794-02	SCREW 1/4”-20UNCX10 AL.BRONZE	13	1
0.2247.008	MECH.SEAL COMPL FA25.47.14	14	1
0.0370.525	EXT. CIRCLIP D25 DIN471 ST	15	1
01-46027-1	LABEL DRY RUNNING (4-LANG.)	16	1
0.2172.573	O-RING 23.4X3.53 BS1806 NBR70	17	1
01-35876	CLUTCH CARRIER	18	1
01-46730	SPRING F7B/F8B MC	19	1
01-35867	SHAFT HUB	20	1
01-35863	PULLEY	21	1
01-46712	PIN F7B/F8B MC	22	3
01-35864	CLUTCH CONE	23	1
01-46709	SPRING	24	1
01-46713	SPRING HOLDER F7B/F8B MC	25	1
01-46714	SLEEVE F7B/F8B MC	26	2
0.3447.001	LEVER GN310 AN 125-M10	27	1
0.3433.001	BALL RB-7.5G20 ISO3290-1975 ST	28	1
0.0502.025	KEY A 6X6X25 DIN6885A ST	29	2
0.3431.740	BALL BEARING 6008-2RS1	30	1
0.0370.040	EXT. CIRCLIP D40 DIN471 ST	31	1
0.0371.068	RETAIN. RING BORE D68 DIN472 SPRST	32	1
0.0356.002	WASHER D8.4XD26X5 SS1466 STZN	33	1
0.0141.915	TAP BOLT M8X14 DIN933 8.8ZN	34	3
0.0300.742	SET SCREW M6X6 DIN916 A2	35	1
0.0370.025	EXT. CIRCLIP D25 DIN471 ST	36	1

The product, i.e. concept, design and construction, is the property of SPX Johnson Pump Marine AB

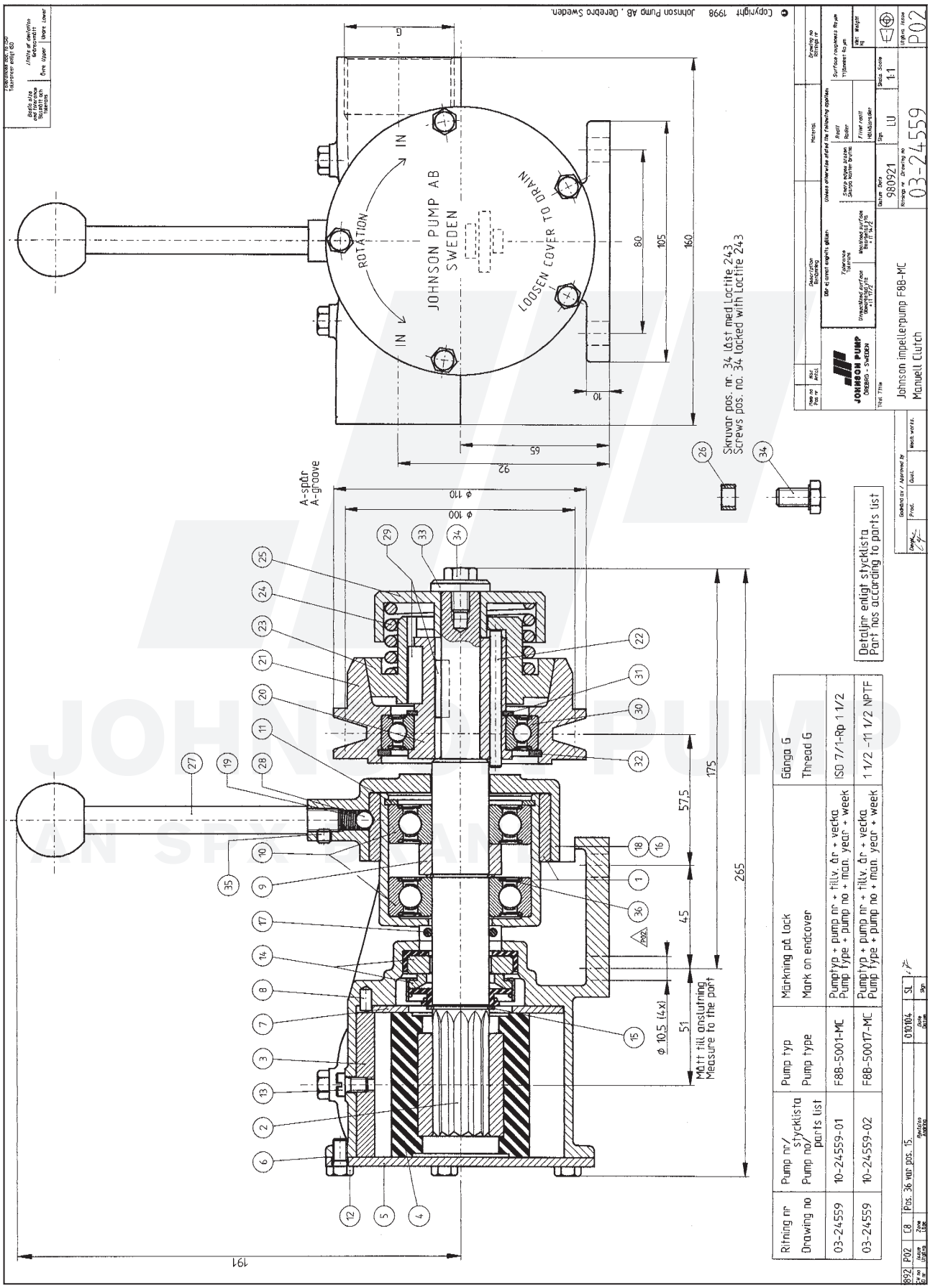
JOHNSON PUMP AB
SWEDEN
ROTATION
IN
IN
LOOSEN COVER TO DRAIN
A-spår
A-groove
Skruvar pos. nr. 34 låst med Loctite 243
Screws pos. no. 34 locked with Loctite 243
Detaljnr enligt stycklista
Part nos according to parts list
Mått till anslutning
Measure to the port
Märkning på lock
Mark on endcover
Gänga G
Thread G
Pump typ
Pump type
Pump nr/ stycklista
Pump no/ parts list
Ritning nr
Drawing no
F8B-5001-MC
F8B-50017-MC
10-24559-01
10-24559-02
03-24559
ISO 7/1-Rp 1 1/2
1 1/2 -11 1/2 NPTF
JOHNSON PUMP
ÖREBRO - SWEDEN
Johnson impellerpump F8B-MC
Manuell Clutch
980921
03-24559
P02
Copyright 1998 Johnson Pump AB, Örebro Sweden.

F8B-5000-TSS Impeller pump w/o clutch
Art. No. 10-13176-99

Service Kit 09-45579

Part. No	Description GB	Position	Quantity
01-13002-1	BODY F8B-	1	1
01-42422-1	ENDCOVER F8B/F9B-	2	1
01-35138	SHAFT F8/F9B-5000	3	1
01-42680	CAM 1/1 F8B-	4	1
08-819B	IMPELLER F8B-9	5	1
01-42424	GASKET F8B/F9B-	6	1
01-42426	PIN	7	1
01-42423	WEARPLATE F8/F80/F9/F95B-	8	1
01-13020	PEDESTAL F8/F9B-3000/-5000	9	1
01-42747	SPACER F8/F9	10	1
01-35144-2	ADAPTOR F8/F9B-5000	11	1
0.2230.319	V-GASKET V 25A NBR70	12	1
0.2247.051	MECH.SEAL COMPL 1" 106BT2C1	13	1
0.3431.780	BALL BEARING 6305-2RS1	14	2
0.0371.062	RETAIN. RING BORE D62 DIN472 SPRST	15	1
0.0370.525	EXT. CIRCLIP D25 DIN471 ST	16	1
0.0353.309	SPRINGWASH D8.2 DIN127 STZN	19	4
0.0300.566	SETSCREW M8X12 DIN916 A2	22	3
0.0144.002	BOLT 5/16"-18UNCX20 SS1943	25	4
01-46794-02	SCREW 1/4"-20UNCX10 AL.BRONZE	27	1
0.0144.200	BOLT 1/4"-20UNCX1/2" SS1943 A4	28	5
0.0370.025	EXT. CIRCLIP D25 DIN471 ST	29	1
0.0633.705	PLUG TYPE 410080 D54.5MM DBI	0	2
0.3444.004	CARTON NO 4 290X195X180	0	1
01-46027-1	LABEL DRY RUNNING (4-LANG.)	0	1
09-46437	ASS. KIT F. CLUTCH F8/F9/F95	0	1
09-46506	WARNING PACKAGE, INDUSTRIAL	0	1
IB-503/02	INSTR.MANUAL FB-5000	0	1
01-47039	BOX LABEL JP 135X45	0	1

The product, i.e. concept, design and construction, is the property of SPX Johnson Pump Marine AB

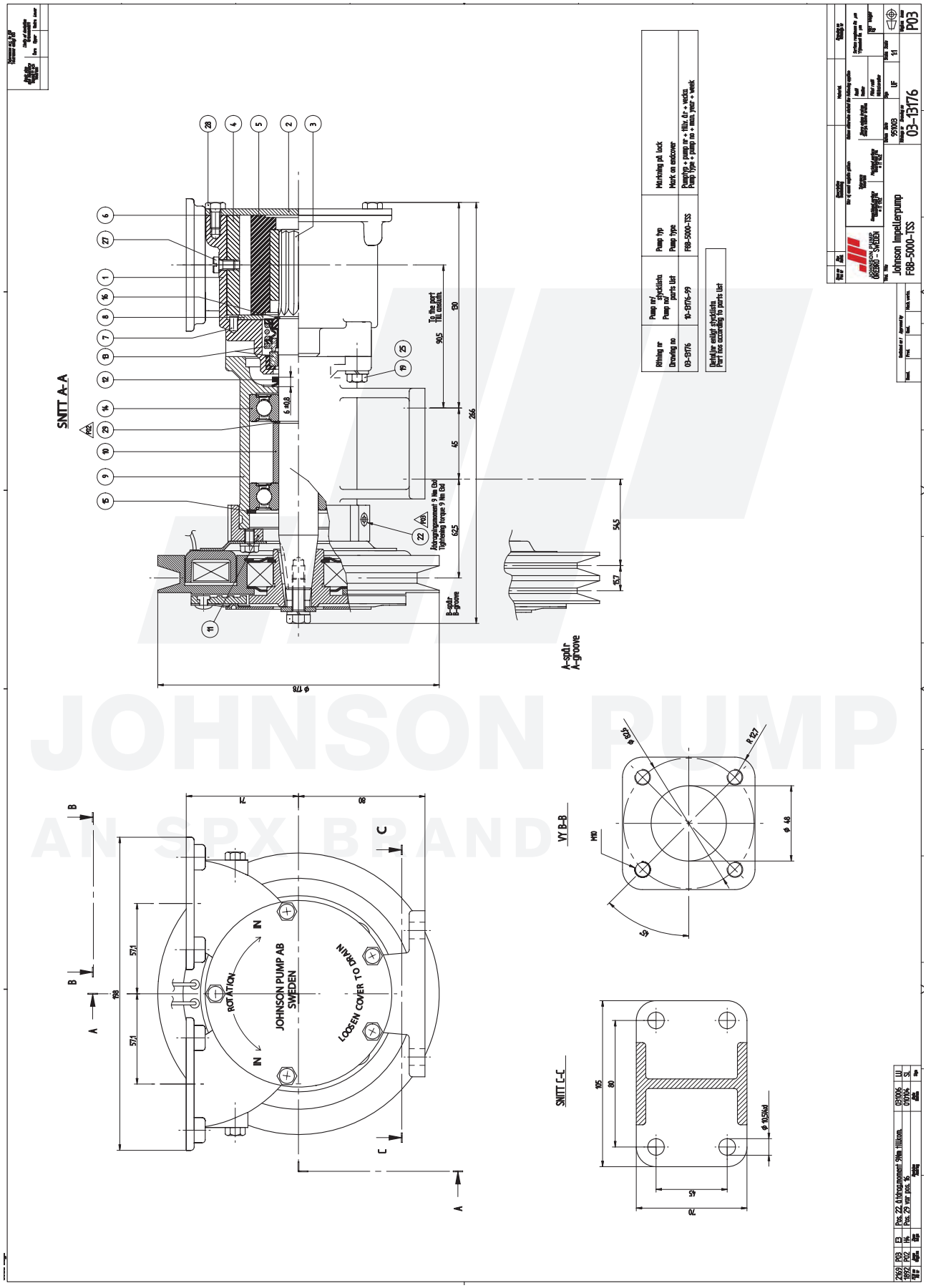

JOHNSON PUMP
AN SPX BRAND

F9B-5600 Impeller pump w/o clutch
Art. No. 10-13027-99

Part. No	Description GB	Position	Quantity
04-13027-01	F9B-5600 SUB-ASSEMBLY	0	1
01-42422-1	ENDCOVER F8B/F9B-	2	1
01-42424	GASKET F8B/F9B-	6	1
0.0144.200	BOLT 1/4"-20UNCX1/2" SS1943 A4	28	5
09-46437	ASS. KIT F. CLUTCH F8/F9/F95	0	1
0.3444.004	CARTON NO 4 290X195X180	0	1
IB-503/02	INSTR.MANUAL FB-5000	0	1
01-46027-1	LABEL DRY RUNNING (4-LANG.)	0	1
01-47039	BOX LABEL JP 135X45	0	1

The product, i.e. concept, design and construction, is the property of SPX Johnson Pump Marine AB

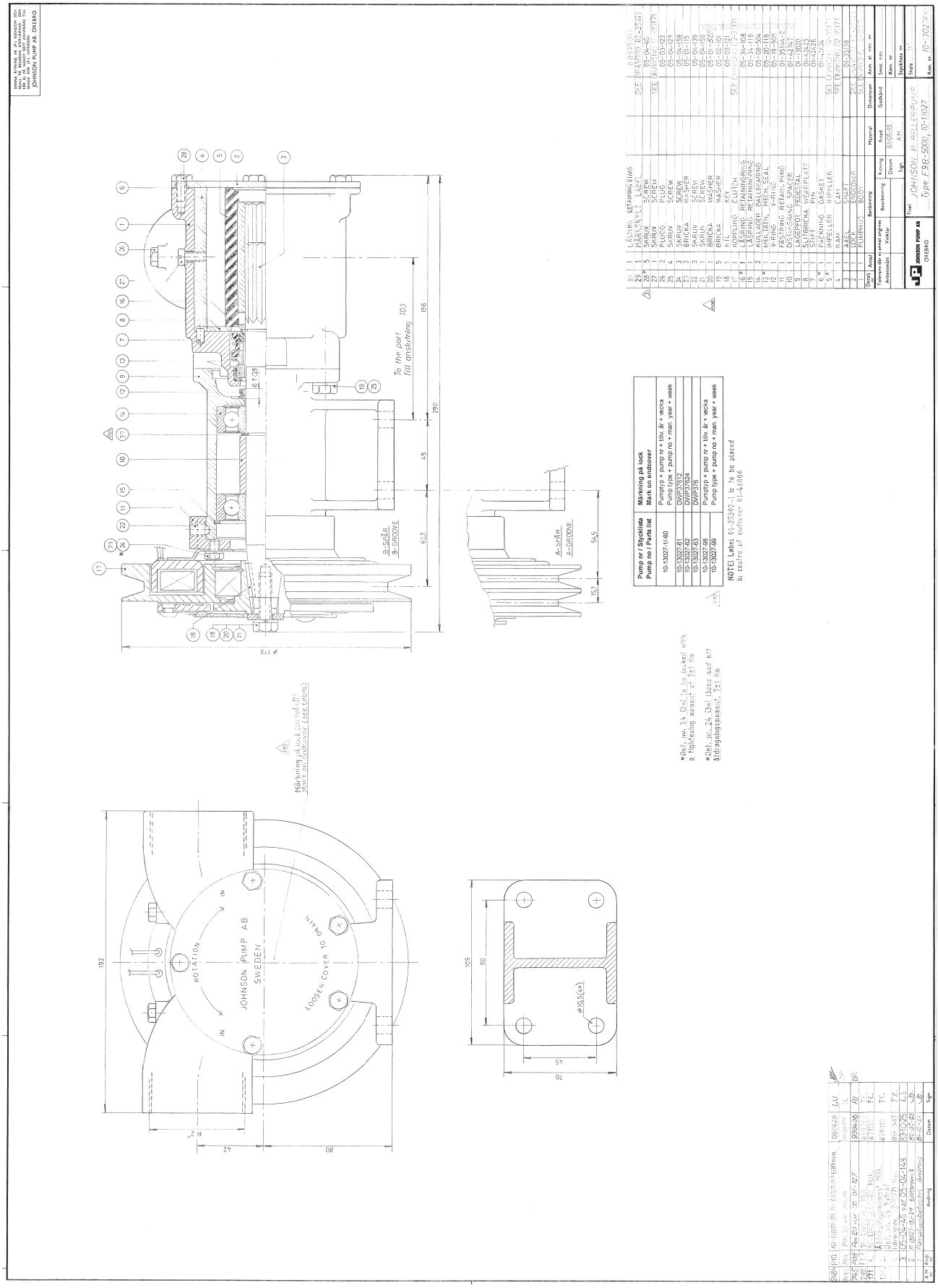
JOHNSON PUMP AB
OSKARSHAMN
Typ F9B-5000, 10-13027
To the port
Till anslutning
103
156
280
45
65,5
6 ± 0,05
A-SPÅR
A-GROOVE
B-SPÅR
B-GROOVE
54,5
15,7
Märkning på lock (se ritning)
Mark on endcover (see picture)
ROTATION
IN
JOHNSON PUMP AB
SWEDEN
LOOSEN COVER TO
OPEN
192
42
80
105
70
45
Pump nr / Stycklista
Pump no / Parts list
Märkning på lock
Mark on endcover
10-13027-1/-60
Pumptyp + pump nr + tillv. år + vecka
Pump type + pump no + man. year + week
10-13027-61
DWP37612
10-13027-62
DWP37624
10-13027-63
DWP376
10-13027-98
Pumptyp + pump nr + tillv. år + vecka
10-13027-99
Pump type + pump no + man. year + week
NOTE! Label 01-35507-1 is to be placed in centre of endcover 01-46406
*Det. nr. 24 (3st) ska dras åtdragningsmoment: 7±1 Nm
*Det. nr. 24 (3st) ska dras med ett åtdragningsmoment: 7±1 Nm
JOHNSON PUMP AB
OSKARSHAMN
Typ F9B-5000, 10-13027

F9B-5000 Impeller pump 12V 2XA
Art. No. 10-13143-01

Service Kit 09-46371

Part. No	Description GB	Position	Quantity
01-46319	GASKET F95B-	15	2
0.0141.917	TAP BOLT M8X22 DIN934 8.8ZP	20	8
01-13119-2	BODY F95B-9	1	1
01-24426-1	CONNECTION F95B-3000/-5000	3	2
0.3431.743	BALL BEARING 6307 2 RS1 ST	13	1
0.3431.043	BALL BEARING 6306 2 RS C3 ST	14	1
0.0370.535	EXT. CIRCLIP D35 DIN471 BRONZE	16	1
0.0371.080	RETAIN. RING BORE D80 DIN472 SPRST	17	1
01-46794-09	SCREW M8X25 AL.BRONZE	18	2
0.2230.322	V-GASKET V 35A NBR70	23	1
01-46323	WASHER F95B-	10	1
01-46322	WASHER F95B-	11	1
01-35700	SHAFT F95B-5000	4	1
01-35744	CAM 1/1 F95B-	12	1
0.2172.142	O-RING 90.00X2.5 NBR70	6	1
01-35284-2	ENDCOVER F9B/F95B O-RING	5	1
0.0138.134	TAP BOLT M6X12 DIN933 A2	19	5
01-13131-1	BEARING HOUSING F95B-	2	1
0.2247.018	MECH.SEAL CPL FA35.60.16	8	1
0.0141.922	TAP BOLT M10X25 DIN933 8.8ZP	21	4
01-42426	PIN	24	1
01-42423	WEARPLATE F8/F80/F9/F95B-	7	1
08-820B	IMPELLER F95B-	9	1
0.0353.111	SPRING WASHER D10.2 DIN127B A2	22	4
0.0502.001	KEY A 4X4X20 DIN6885A ST	25	1
0.3454.001	EL. MAGNETIC CLUTCH 12V A 7"	26	1
0.0141.903	TAP BOLT M6X10 DIN933 8.8ZP	28	3
0.0353.402	WASHER D6,5 X D11,8 X1,6	29	3
0.0141.918	TAP BOLT M8X25 DIN933 8.8ZP	30	1
0.0353.309	SPRINGWASH D8.2 DIN127 STZN	31	1

The product, i.e. concept, design and construction, is the property of SPX Johnson Pump Marine AB

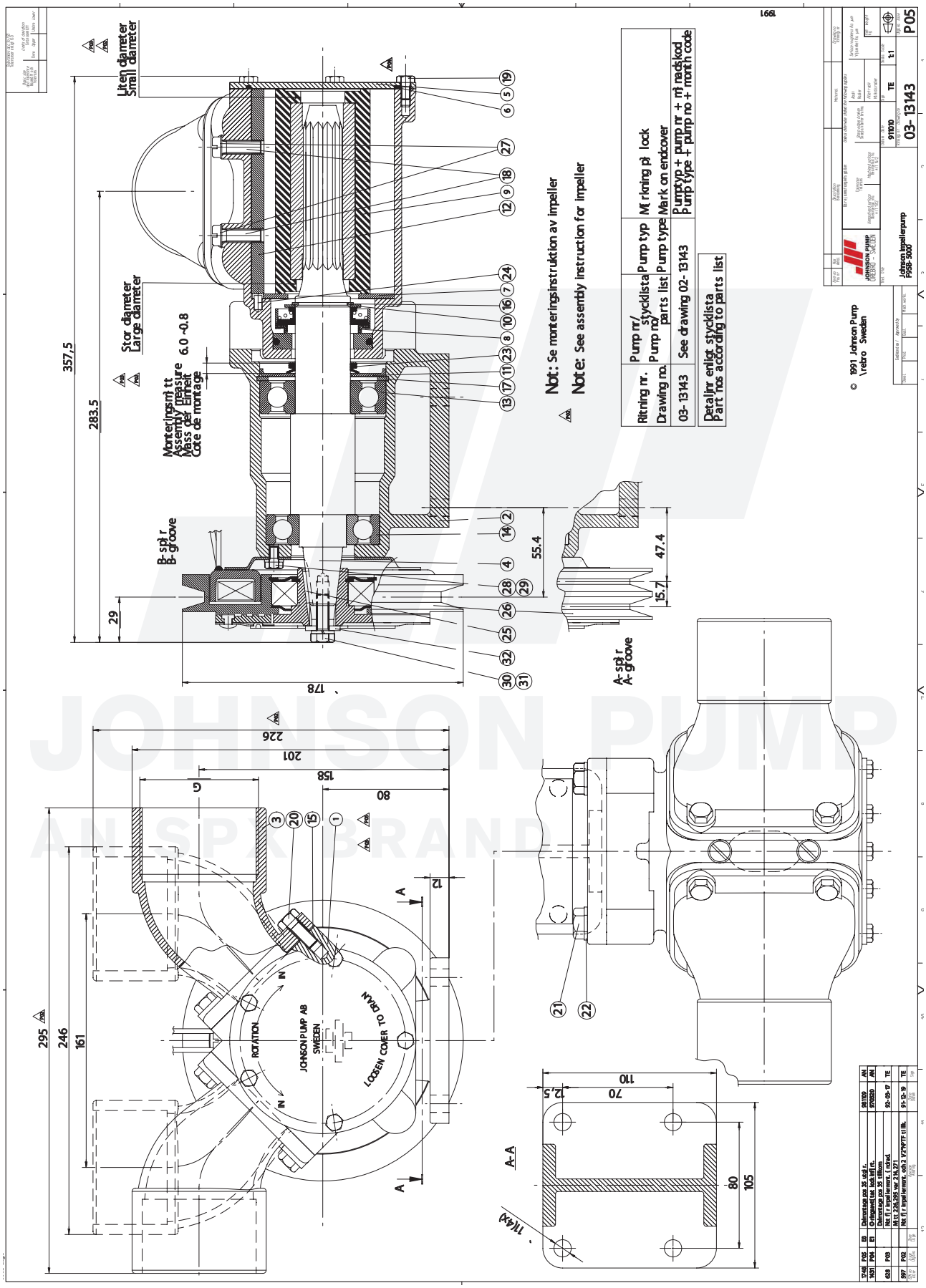

JOHNSON PUMP
A SPX BRAND

F9B-5600-TSS Impeller pump w/o clutch
Art. No. 10-13178-99

Service Kit 09-45582

Part. No	Description GB	Position	Quantity
01-13003	BODY F9B	1	1
01-42422-1	ENDCOVER F8B/F9B-	2	1
01-35138	SHAFT F8/F9B-5000	3	1
01-43137	CAM 1/1 F9B-	4	1
08-814B	IMPELLER	5	1
01-42424	GASKET F8B/F9B-	6	1
01-42426	PIN	7	1
01-42423	WEARPLATE F8/F80/F9/F95B-	8	1
01-13020	PEDESTAL F8/F9B-3000/-5000	9	1
01-42747	SPACER F8/F9	10	1
01-35144-2	ADAPTOR F8/F9B-5000	11	1
0.2230.319	V-GASKET V 25A NBR70	12	1
0.2247.051	MECH.SEAL COMPL 1" 106BT2C1	13	1
0.3431.780	BALL BEARING 6305-2RS1	14	2
0.0371.062	RETAIN. RING BORE D62 DIN472 SPRST	15	1
0.0370.525	EXT. CIRCLIP D25 DIN471 ST	16	1
0.0353.309	SPRINGWASH D8.2 DIN127 STZN	19	4
0.0300.566	SETSCREW M8X12 DIN916 A2	22	3
0.0144.002	BOLT 5/16"-18UNCX20 SS1943	25	4
01-46794-02	SCREW 1/4"-20UNCX10 AL.BRONZE	27	1
0.0144.200	BOLT 1/4"-20UNCX1/2" SS1943 A4	28	5
0.0370.025	EXT. CIRCLIP D25 DIN471 ST	29	1
0.0633.705	PLUG TYPE 410080 D54.5MM DBI	0	2
0.3444.004	CARTON NO 4 290X195X180	0	1
01-46027-1	LABEL DRY RUNNING (4-LANG.)	0	1
09-46437	ASS. KIT F. CLUTCH F8/F9/F95	0	1
09-46506	WARNING PACKAGE, INDUSTRIAL	0	1
IB-503/02	INSTR.MANUAL FB-5000	0	1
01-47039	BOX LABEL JP 135X45	0	1

The product, i.e. concept, design and construction, is the property of SPX Johnson Pump Marine AB

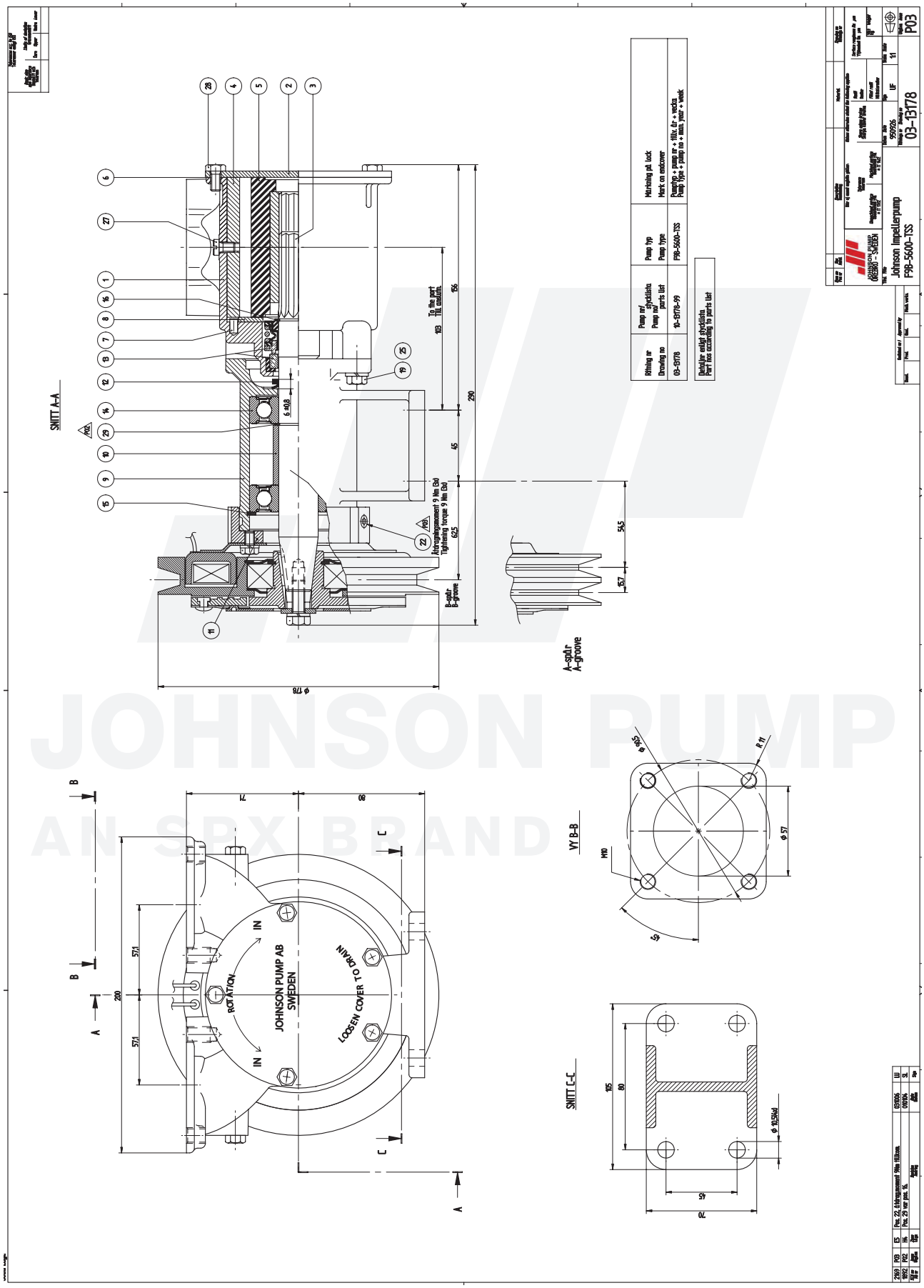

JOHNSON PUMP
AN SPX BRAND

F9B-5600 Impeller pump
Art. No. 10-13226-99

Service Kit 09-45581
See drawing number 10-13027- F9B-5000

Part. No	Description GB	Position	Quantity
04-13226-01	F9B-5600 SUB-ASSEMBLY	0	1
01-42422-3	ENDCOVER F8B/F9B- (O-RING)	2	1
0.2172.142	O-RING 90.00X2.5 NBR70	6	1
0.0144.200	BOLT 1/4"-20UNCX1/2" SS1943 A4	28	5
09-46437	ASS. KIT F. CLUTCH F8/F9/F95	0	1
0.3444.004	CARTON NO 4 290X195X180	0	1
IB-503/02	INSTR.MANUAL FB-5000	0	1
01-46027-1	LABEL DRY RUNNING (4-LANG.)	0	1
01-47039	BOX LABEL JP 135X45	0	1

The product, i.e. concept, design and construction, is the property of SPX Johnson Pump Marine AB

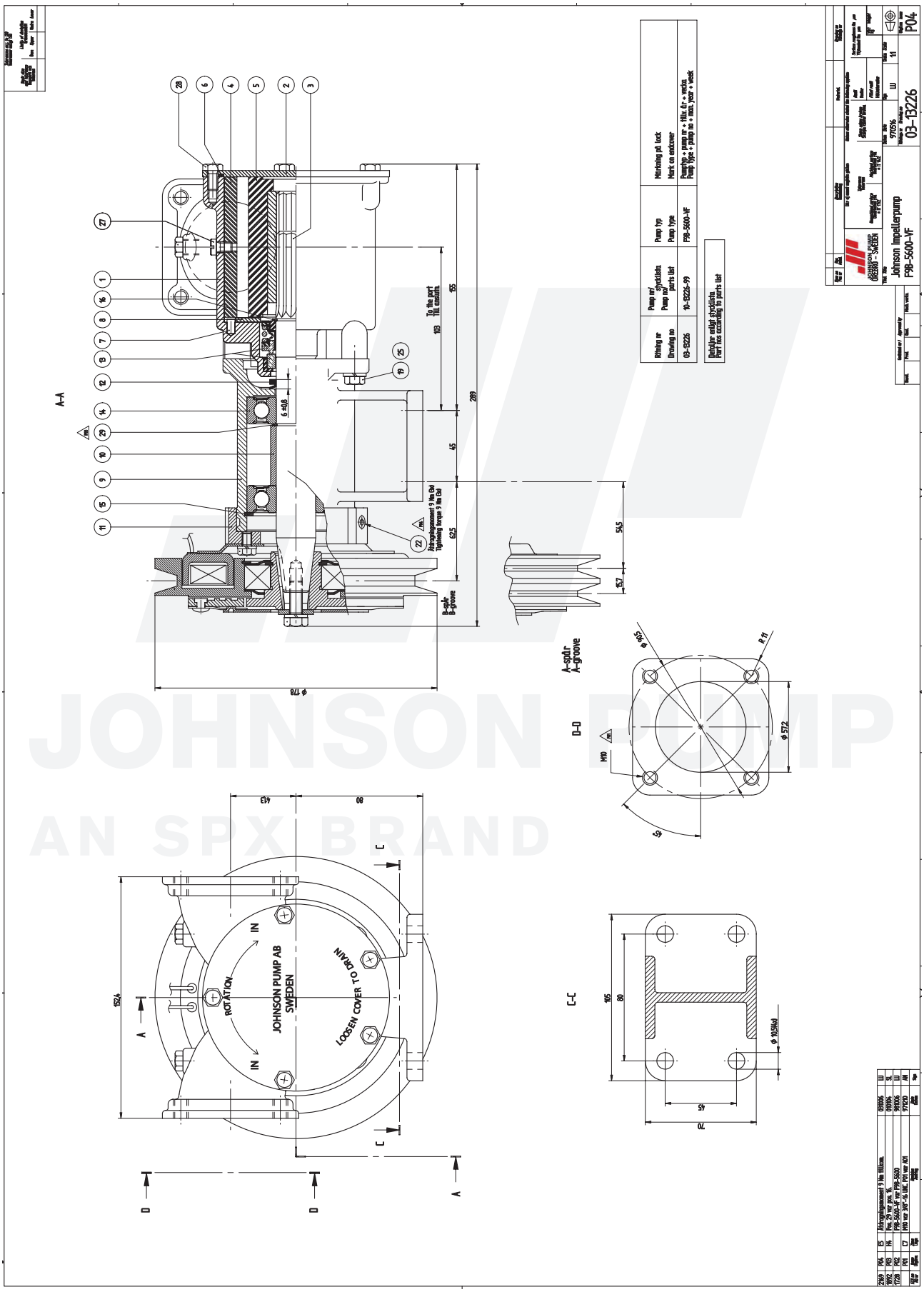

JOHNSON PUMP
AN SPX BRAND

F9B-5 Impeller pump
Art. No. 10-24161-1

Part. No	Description GB	Position	Quantity
01-11358-1	BODY F9B-	1	1
01-35163-1	ENDCOVER F8B-9/F8B-5 OEM	2	1
01-35138	SHAFT F8/F9B-5000	3	1
01-43137	CAM 1/1 F9B-	4	1
08-814B	IMPELLER	5	1
01-42424	GASKET F8B/F9B-	6	1
01-42426	PIN	7	1
01-42423	WEARPLATE F8/F80/F9/F95B-	8	1
01-13020	PEDESTAL F8/F9B-3000/-5000	9	1
01-42747	SPACER F8/F9	10	1
01-35144-1	ADAPTOR F8/F9B-5 OEM	11	1
0.2230.319	V-GASKET V 25A NBR70	12	1
0.2247.051	MECH.SEAL COMPL 1" 106BT2C1	13	1
0.3431.780	BALL BEARING 6305-2RS1	14	2
0.0371.062	RETAIN. RING BORE D62 DIN472 SPRST	15	1
0.0370.525	EXT. CIRCLIP D25 DIN471 ST	16	2
0.3454.004	EL. MAGNETIC CLUTCH 24V B 7"	17	1
0.0502.001	KEY A 4X4X20 DIN6885A ST	18	1
0.0353.309	SPRINGWASH D8.2 DIN127 STZN	19	5
0.0141.918	TAP BOLT M8X25 DIN933 8.8ZP	21	1
0.0300.566	SETSCREW M8X12 DIN916 A2	22	3
0.0353.402	WASHER D6,5 X D11,8 X1,6	23	3
0.0141.903	TAP BOLT M6X10 DIN933 8.8ZP	24	3
0.0144.002	BOLT 5/16"-18UNCX20 SS1943	25	4
01-46794-02	SCREW 1/4"-20UNCX10 AL.BRONZE	27	1
0.0144.200	BOLT 1/4"-20UNCX1/2" SS1943 A4	28	5
0.3452.100	SCREWED HOSE JOINT SCHLEMMER	29	1
0.3452.101	HOSE D13XD9.9 SCHLEMMER1200100	30	1
01-46027-1	LABEL DRY RUNNING (4-LANG.)	0	1

The product, i.e. concept, design and construction, is the property of SPX Johnson Pump Marine AB

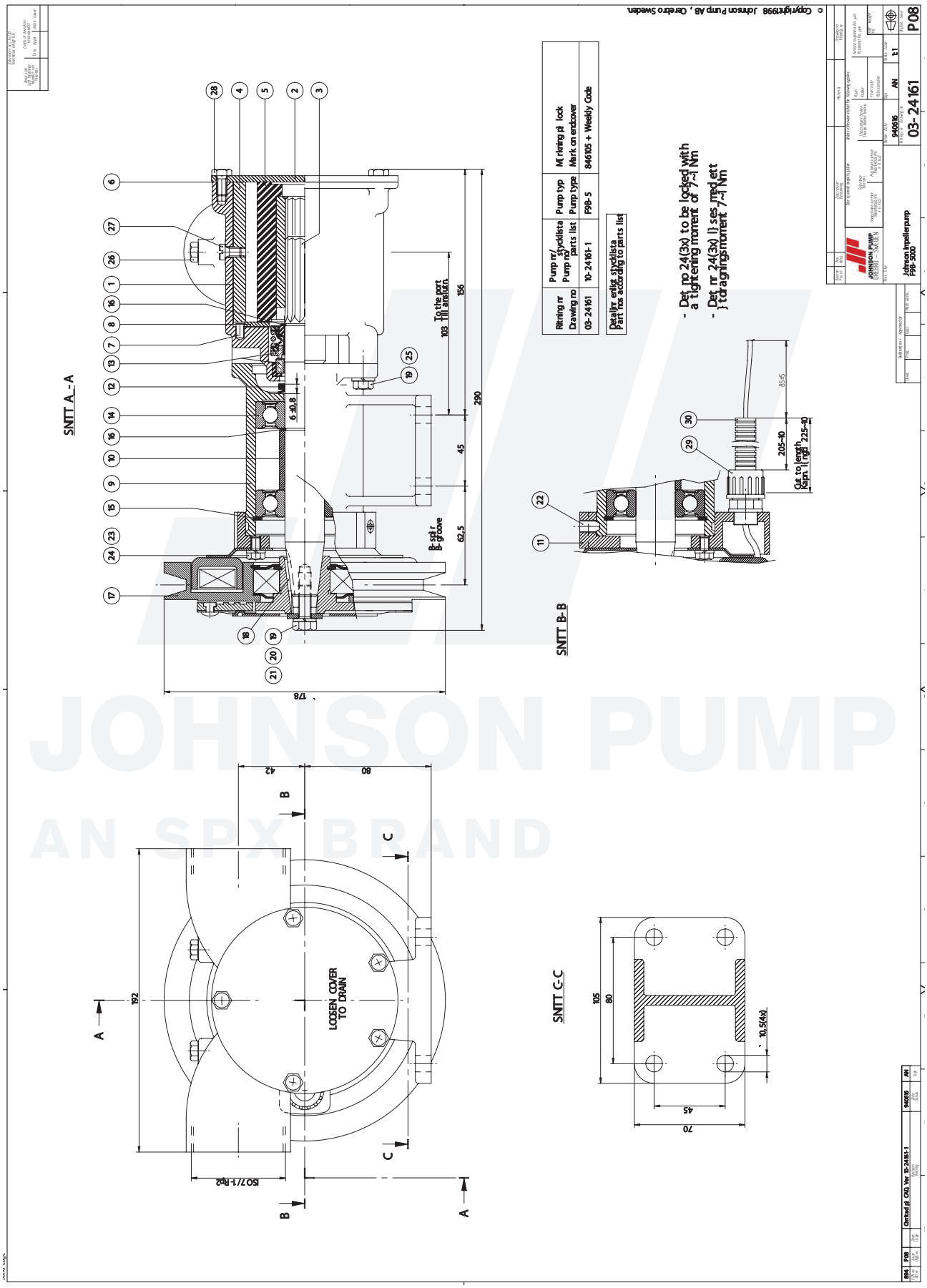

JOHNSON PUMP
AN SPX BRAND

JOHNSON PUMP
AN SPX BRAND

Multipurpose pumps

Sturdy
Compact
Bronze

Extra
Heavy
Duty

Multipurpose

Pulley driven pedestal mounted pumps are used when a free driving pulley is available on the engine

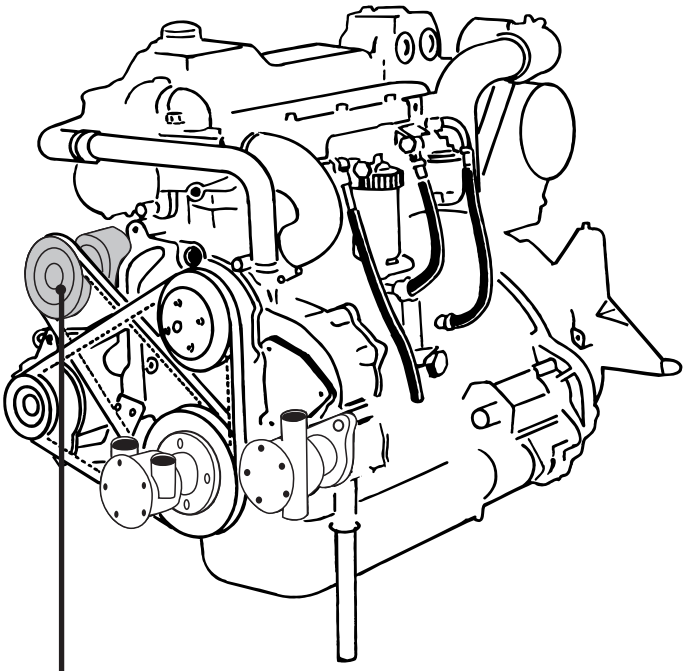

Sturdy, compact bronze pumps, -8 series

A range of multipurpose bronze pumps. Compact design, raw water resistant pumps at an attractive price – with the renowned Johnson quality. These pumps are designed for a number of applications on board.

With excellent self-priming capability, these pumps are ideal as cooling water pumps for marine engines, bilge pumps, deckwash pumps, fresh water pumps, fuel transfer pumps and other applications. Also ideally suited on shore to empty septic tanks, to flush clean and to fill water tanks.

Available in sizes from 3/8" to 1 1/2" (4 l/min to 279 l/min).

Vacuum switch as extra accessory

Extra heavy duty pumps, -3000 series

Whenever you need greater strength or service from a pump, use a Johnson extra heavy duty flexible impeller pump with separate bearing housing and mechanical seal for less wear and longer life.

These pumps cover the entire range of marine applications and may be used as cooling water pumps, bilge pumps, deckwash pumps, emergency and fire fighting pumps, etc.

Wearing parts are easily replaceable and service kits are available for all standard models.

Available in sizes from 3/4" to 2 1/2" (13 l/min to 625 l/min).

Vacuum switch as extra accessory

Multipurpose pumps

Sturdy, compact bronze, -8 series

Art. No.	Pump	Page
F35B-8	10-24569	389
F35B-8	10-35038	391
F4B-8	10-24074	393
F4B-8	10-24570	395
F5B-8	10-24073	397
F5B-8	10-24571	399
F7B-8	10-24070	401
F7B-8	10-24572	403
F8B-8	10-13021	405

Extra heavy duty, -3000 series

Art. No.	Pump	Page
F5B-3000	10-24210	406
F7B-3000	10-24209	407
F8B-3000	10-13024	409
F8B-3000-TSS	10-13175	411
F9B-3000	10-13026	413
F9B-3000-TSS	10-13177	415
F9B-3000	10-13225	417
F95B-3000	10-13121	419

F35B-8 Impeller pump
Art No. 10-24569-01

Part No	Description GB	Position	Quantity
01-35881-1	BODY F35B-8	1	1
01-46735-1	SHAFT F35/F4B-8	2	1
01-46739-2	ENDCOVER F35B NEUTRAL	3	1
08-808B-1	IMPELLER	4	1
01-42910	CAM 1/1 F35B-	5	1
01-45542	SPACER D 12X16X4,3	6	1
01-42400	PIN F35B-/F7B/F70B	7	1
01-46676	WEAR PLATE F35B-8 SS	8	1
01-45049	PLATE F35/F4B-8	9	1
01-45659	WASHER F4B-8/-9	10	1
01-46797	LABEL	11	1
01-46790-01	WASHER D7.5XD4X1 CU	12	1
0.0141.700	TAP BOLT M4X8 ISO4017 A2-70	14	4
01-46794-03	SCREW 8-32UNCX8	15	1
0.2173.440	O-RING 42X2 NBR70	16	1
0.2173.432	O-RING 11.3X2.4 SS1586 NBR70	17	1
0.3431.748	BALL BEARING 6001 2 RS1 ST	18	2
0.2247.021	MECH.SEAL COMPL D12	19	1
0.0371.028	RETAIN. RING BORE D28 DIN472 SPRST	20	1
0.0370.012	EXT. CIRCLIP D12 DIN471 ST	21	1
0.0370.512	EXT. CIRCLIP D12 DIN471 FB	22	1
01-46027-1	LABEL DRY RUNNING (4-LANG.)	0	1
0.3444.001	CARTON NO. 1 170X135X 90	0	1
IB-501/01	INSTR.MANUAL FB-8 SERIES	0	1
01-47039	BOX LABEL JP 135X45	0	1

F35B-8 Impeller pump
Art No. 10-24569-13

Part No	Description GB	Position	Quantity
01-35881-1	BODY F35B-8	1	1
01-46735-1	SHAFT F35/F4B-8	2	1
01-46739-2	ENDCOVER F35B NEUTRAL	3	1
08-808B-1	IMPELLER	4	1
01-42910	CAM 1/1 F35B-	5	1
01-45542	SPACER D 12X16X4,3	6	1
01-42400	PIN F35B-/F7B/F70B	7	1
01-46676	WEAR PLATE F35B-8 SS	8	1
01-45049	PLATE F35/F4B-8	9	1
01-46797	LABEL	11	1
01-46790-01	WASHER D7.5XD4X1 CU	12	1
0.0141.700	TAP BOLT M4X8 ISO4017 A2-70	14	4
01-46794-03	SCREW 8-32UNCX8	15	1
0.2173.440	O-RING 42X2 NBR70	16	1
0.2173.432	O-RING 11.3X2.4 SS1586 NBR70	17	1
0.3431.748	BALL BEARING 6001 2 RS1 ST	18	2
0.2233.010	LIP SEAL 12X24X7 DPSM	19	1
0.0371.028	RETAIN. RING BORE D28 DIN472 SPRST	20	1
0.0370.012	EXT. CIRCLIP D12 DIN471 ST	21	1
0.3444.001	CARTON NO. 1 170X135X 90	0	1
01-46027-1	LABEL DRY RUNNING (4-LANG.)	0	1
IB-501/01	INSTR.MANUAL FB-8 SERIES	0	1

The product, i.e. concept, design and construction, is the property of SPX Johnson Pump Marine AB

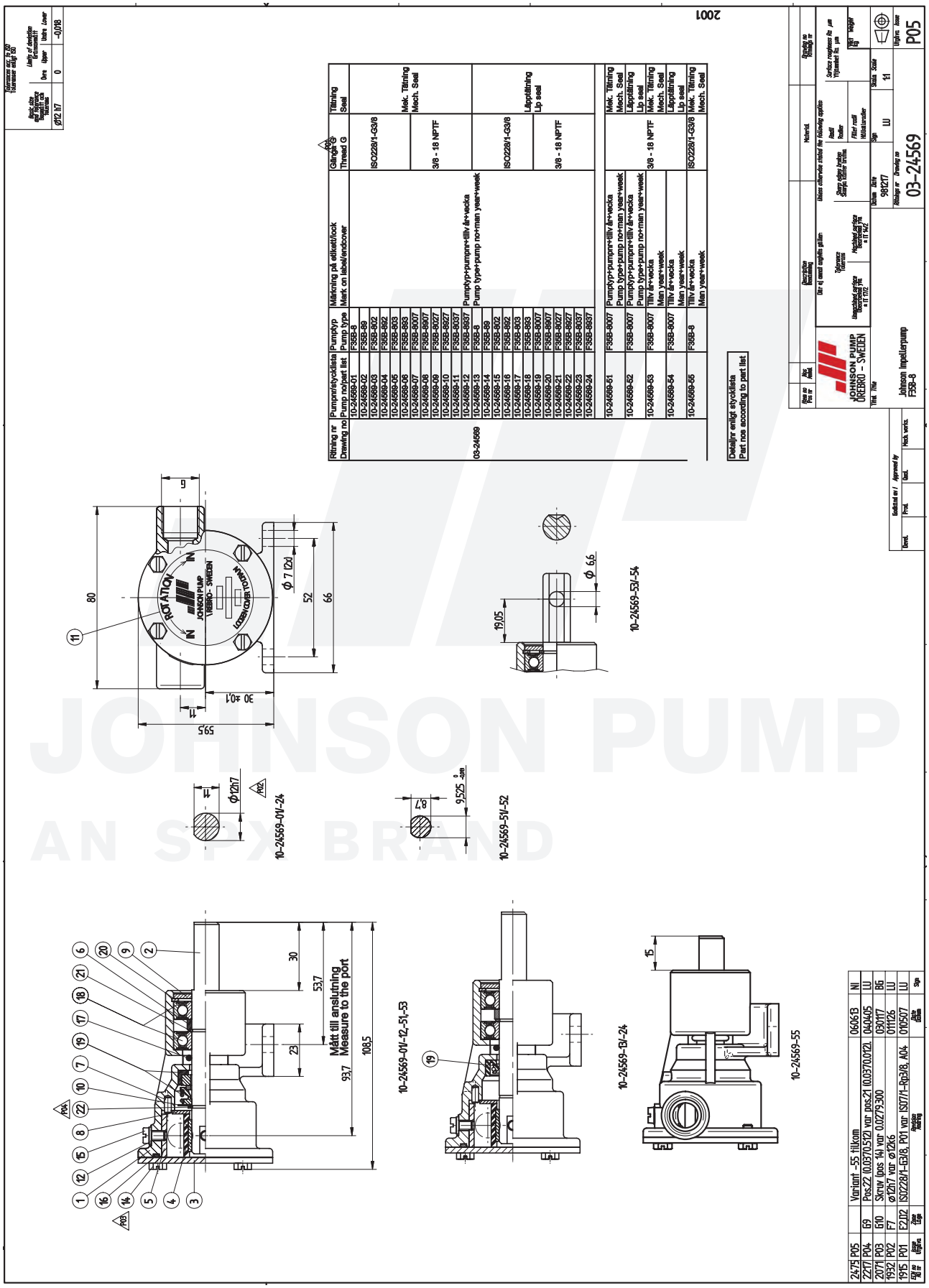

JOHNSON PUMP
AN SPX BRAND

Multipurpose

F35B-8 Impeller pump
Art. No. 10-35038-1

Service Kit No. 09-45589

Part no.	Description GB	Position	Quantity
01-35037-1	BODY F35B-8	1	1
01-45069	SHAFT F35/F4B-8	2	1
01-43239	ENDCOVER F35B-	3	1
08-808B-1	IMPELLER	4	1
01-43240	GASKET F35B-	5	1
01-42910	CAM 1/1 F35B-	6	1
01-45050	PLATE F35/F4B-8	7	1
01-45049	PLATE F35/F4B-8	8	1
0.0279.300	SCREW M4X8 ISO1207 A4	10	4
01-46794-03	SCREW 8-32UNCX8	11	1
0.2233.010	LIP SEAL 12X24X7 DPSM	12	1
0.2173.432	O-RING 11.3X2.4 SS1586 NBR70	13	1
0.3431.748	BALL BEARING 6001 2 RS1 ST	14	2
0.0371.028	RETAIN. RING BORE D28 DIN472 SPRST	15	1
01-46790-01	WASHER D7.5XD4X1 CU	16	1
01-42400	PIN F35B-/F7B/F70B	17	1
01-45087	WEARPLATE F35B-	18	1
0.0370.012	EXT. CIRCLIP D12 DIN471 ST	19	1

The product, i.e. concept, design and construction, is the property of SPX Johnson Pump Marine AB

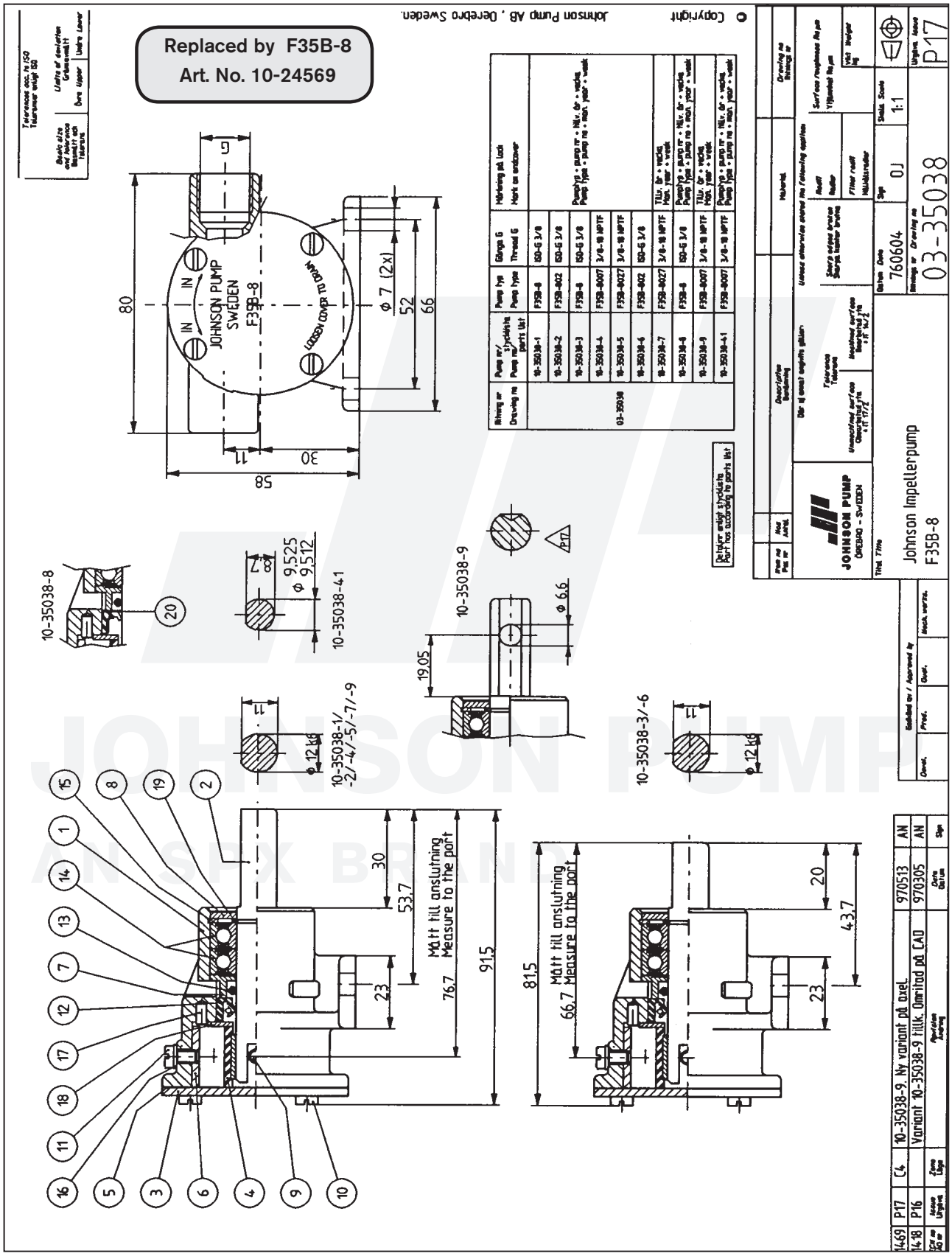

JOHNSON PUMP
AN SPX BRAND

F4B-8 Impeller pump
Art. No. 10-24074-1

Service Kit No. 09-45587, Pump No. 10-24074-1-3-5-7-9-11-13-71
Service Kit No. 09-45588, Pump No. 10-24074-2-4-6-8-10-12
Service Kit No. 09-46625, Pump No. 10-24074-14

Part. No.	Description GB	Position	Quantity
01-35029-1	BODY F4B-8	1	1
01-45069	SHAFT F35/F4B-8	2	1
01-42398	ENDCOVER F4/F5B-	3	1
08-810B-1	IMPELLER	4	1
01-42391	GASKET F4B-	5	1
01-42389	CAM 1/1 F4B-	6	1
01-45050	PLATE F35/F4B-8	7	1
01-45049	PLATE F35/F4B-8	8	1
0.0279.300	SCREW M4X8 ISO1207 A4	10	6
01-46794-04	SCREW 8-32UNCX10	11	1
0.2233.010	LIP SEAL 12X24X7 DPSM	12	1
0.2173.432	O-RING 11.3X2.4 SS1586 NBR70	13	1
0.3431.748	BALL BEARING 6001 2 RS1 ST	14	2
0.0371.028	RETAIN. RING BORE D28 DIN472 SPRST	15	1
01-46790-01	WASHER D7.5XD4X1 CU	16	1
0.0370.012	EXT. CIRCLIP D12 DIN471 ST	17	1

The product, i.e. concept, design and construction, is the property of SPX Johnson Pump Marine AB

Pump No.	Mark on endcover
10-24074-1-12/F1/M	Pumptype + No. + monthly code
10-24074-13	CWP31

Note ! Label 01-35302-1 is to placed in centre of endcover 01-46007.

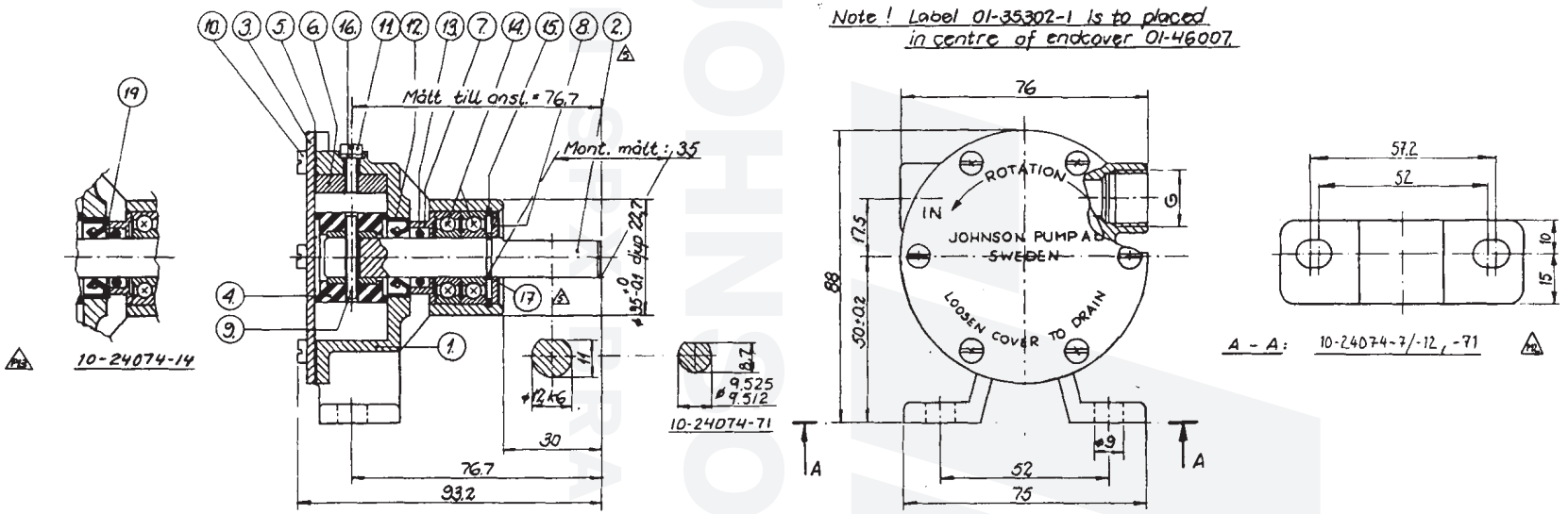

Pump. No.	Pumptype	Impeller Rubberqual.	Impeller No.	Cam Thickness	Cam No.	Screw	Washer	Body	Thread G.	Endcover	Label	Shaft
10-24074-1	F4B-8	Neoprene	08-810 B	1/1	01-42389	05-04-115	05-01-120	01-35029-1	R3/8"	01-42398		01-45069
-2	F4B-89	Nitrile	08-810 B-9									
-3	F4B-802	Neoprene	08-810 B	1/2	01-45084	05-04-163						
-4	F4B-892	Nitrile	08-810 B-9									
-5	F4B-803	Neoprene	08-810 B	2/3	01-45288	05-04-114						
-6	F4B-893	Nitrile	08-810 B-9									
-7	F4B-8007	Neoprene	08-810 B	1/1	01-42389	05-04-115						
-8	F4B-8907	Nitrile	08-810 B-9									
-9	F4B-8027	Neoprene	08-810 B	1/2	01-45084	05-04-163		01-35029-2	3/8"-18 NPTF			
-10	F4B-8927	Nitrile	08-810 B-9									
-11	F4B-8037	Neoprene	08-810 B	2/3	01-45288	05-04-114						
-12	F4B-8937	Nitrile	08-810 B-9									
-13	F4B-8	Neoprene	08-810 B	1/1	01-42389	05-04-115		01-35029-1	R3/8"	01-46007	01-35302-1	
-71	F4B-8007	Neoprene	08-810 B	1/1	01-42389	05-04-115		01-35029-2	3/8"-18 NPTF	01-42398		01-46416
-14	F4B-8	Neoprene	08-810 B	1/1	01-42389	05-04-115		01-35029-1	R3/8"	01-46624		01-45069

*	1	Service kit, Pump No. 10-24074-1-3-5-7-9-11-13-71			09-45587
*	1	Service kit, Pump No. 10-24074-2-4-6-8-10-12			09-45588
	1	Service kit, Pump No. 10-24074-14			09-46625

19	1	Bricka			01-45659
18	1	Märkskylt - Label			See table
17	1	Låsring - Retaining ring		SqA12	05-34-501
16	1	Bricka - Washer		ø7×ø4×1	See table
15	1	Låsring - Retaining ring		SqH28	05-34-131
14	2	Kulloger - Ballbearing		6001 2RS	05-08-130
13	1	O-ring		ø11,3×ø2,4	05-06-313
12*	1	Läppätning - Lipseal		DBSM 12247	05-29-139
11	1	Skruv - Screw			See table
10*	6	Skruv - Screw		M4×8	05-04-642
9	1	Skruv - Screw		NR 10-32 UNF×25	05-04-124
8	1	Bricka - Washer			01-45049
7	1	Bricka - Washer			01-45050
6	1	Kam - Cam			See table
5*	1	Packning - Gasket			01-42391
4*	1	Impeller			See table
3	1	Lock - Endcover			See table
2	1	Axel - Shaft			See table
1	1	Pumphus - Body			See table

Detalj nr	Antal	Benämning	Material	Dimension	Anm. el. ritn. nr

Tolerans där ej annat angives		Bearbetning	Ritning	Ritad	Godkänd
Arbetsmått	Vinklar		Datum	23.2.1976	
			Sign.	JT	

JP JOHNSON PUMP AB ÖREBRO

Titel: Johnson Impellerpump 10-24074, typ F4B-8

Sänt. ritn. ..... Kann. nr ..... Sysätters nr ..... Skala: 1:1 Ritn. nr 10-24074/P13

1999	P13	10-24074-14 tillkommit.	960520	DN
904	P12	Ny hålbild inf. på hus/fot 01-35029-2	940816	AN
861	P11	05-01-120 infärd på samtliga var.	940324	TE
765	P10	05-04-642 var 05-04-163	930610	TE
693	P09	10-24074-71 tillk	921126	TE.
171	P08	10-24074-13 tillk	811116	JT.
	7	Axel 01-45069 var 01-45119	17.9.82	JL.
	6	10-24074-7 t.o.m -12 tillkommit	29.4.82	AH
105	5	Axel var 01-45069. Det.17 tillk.	29.4.82	AH
	4.	10-24074-5/-6 tillkommit	8.5.79	JL
81	3.	Det.nr. 3 var 01-42926	31.8.77	OJ
	2.	10-24074-3/-4 tillkommit	3.6.76	JL.
	1.	Monteringsmått tillkommit	22.3.76	JL.
Ä.M nr	Ändr. nr	Ändring	Datum	Sign.

AN
PJ
PJ
PJ
/RJ

Replaced by F4B-8
Art. No. 10-24570

10-24074

pump F4B-8

The product, i.e. concept, design and construction, is the property of SPX Johnson Pump Marine AB

Multipurpose

F4B-8 Impeller pump
Art No. 10-24570-01

Part No	Description GB	Position	Quantity
01-35882-1	BODY F4B-8	1	1
01-46735-1	SHAFT F35/F4B-8	2	1
01-46007-2	ENDCOVER F4/F5B NEUTRAL	3	1
08-810B-1	IMPELLER	4	1
01-42389	CAM 1/1 F4B-	5	1
01-45542	SPACER D 12X16X4,3	6	1
01-42400	PIN F35B-/F7B/F70B	7	1
01-46737-2	WEAR PLATE F4B	8	1
01-45049	PLATE F35/F4B-8	9	1
01-45659	WASHER F4B-8/-9	10	1
01-46797	LABEL	11	1
01-46790-01	WASHER D7.5XD4X1 CU	12	1
0.0141.700	TAP BOLT M4X8 ISO4017 A2-70	14	6
01-46794-04	SCREW 8-32UNCX10	15	1
0.2173.476	O-RING 54.6X2.4 NBR70	16	1
0.2173.432	O-RING 11.3X2.4 SS1586 NBR70	17	1
0.3431.748	BALL BEARING 6001 2 RS1 ST	18	2
0.2247.021	MECH.SEAL COMPL D12	19	1
0.0371.028	RETAIN. RING BORE D28 DIN472 SPRST	20	1
0.0370.012	EXT. CIRCLIP D12 DIN471 ST	21	1
0.0370.512	EXT. CIRCLIP D12 DIN471 FB	22	1
01-46027-1	LABEL DRY RUNNING (4-LANG.)	0	1
0.3444.001	CARTON NO. 1 170X135X 90	0	1
IB-501/01	INSTR.MANUAL FB-8 SERIES	0	1
01-47039	BOX LABEL JP 135X45	0	1

F4B-8 Impeller pump
Art No. 10-24570-13

Part No	Description GB	Position	Quantity
01-35882-1	BODY F4B-8	1	1
01-46735-1	SHAFT F35/F4B-8	2	1
01-46007-2	ENDCOVER F4/F5B NEUTRAL	3	1
08-810B-1	IMPELLER	4	1
01-42389	CAM 1/1 F4B-	5	1
01-45542	SPACER D 12X16X4,3	6	1
01-42400	PIN F35B-/F7B/F70B	7	1
01-46737-2	WEAR PLATE F4B	8	1
01-45049	PLATE F35/F4B-8	9	1
01-46797	LABEL	11	1
01-46790-01	WASHER D7.5XD4X1 CU	12	1
0.0141.700	TAP BOLT M4X8 ISO4017 A2-70	14	6
01-46794-04	SCREW 8-32UNCX10	15	1
0.2173.476	O-RING 54.6X2.4 NBR70	16	1
0.2173.432	O-RING 11.3X2.4 SS1586 NBR70	17	1
0.3431.748	BALL BEARING 6001 2 RS1 ST	18	2
0.2233.010	LIP SEAL 12X24X7 DPSM	19	1
0.0371.028	RETAIN. RING BORE D28 DIN472 SPRST	20	1
0.0370.012	EXT. CIRCLIP D12 DIN471 ST	21	1
0.3444.001	CARTON NO. 1 170X135X 90	0	1
01-46027-1	LABEL DRY RUNNING (4-LANG.)	0	1
IB-501/01	INSTR.MANUAL FB-8 SERIES	0	1

The product, i.e. concept, design and construction, is the property of SPX Johnson Pump Marine AB

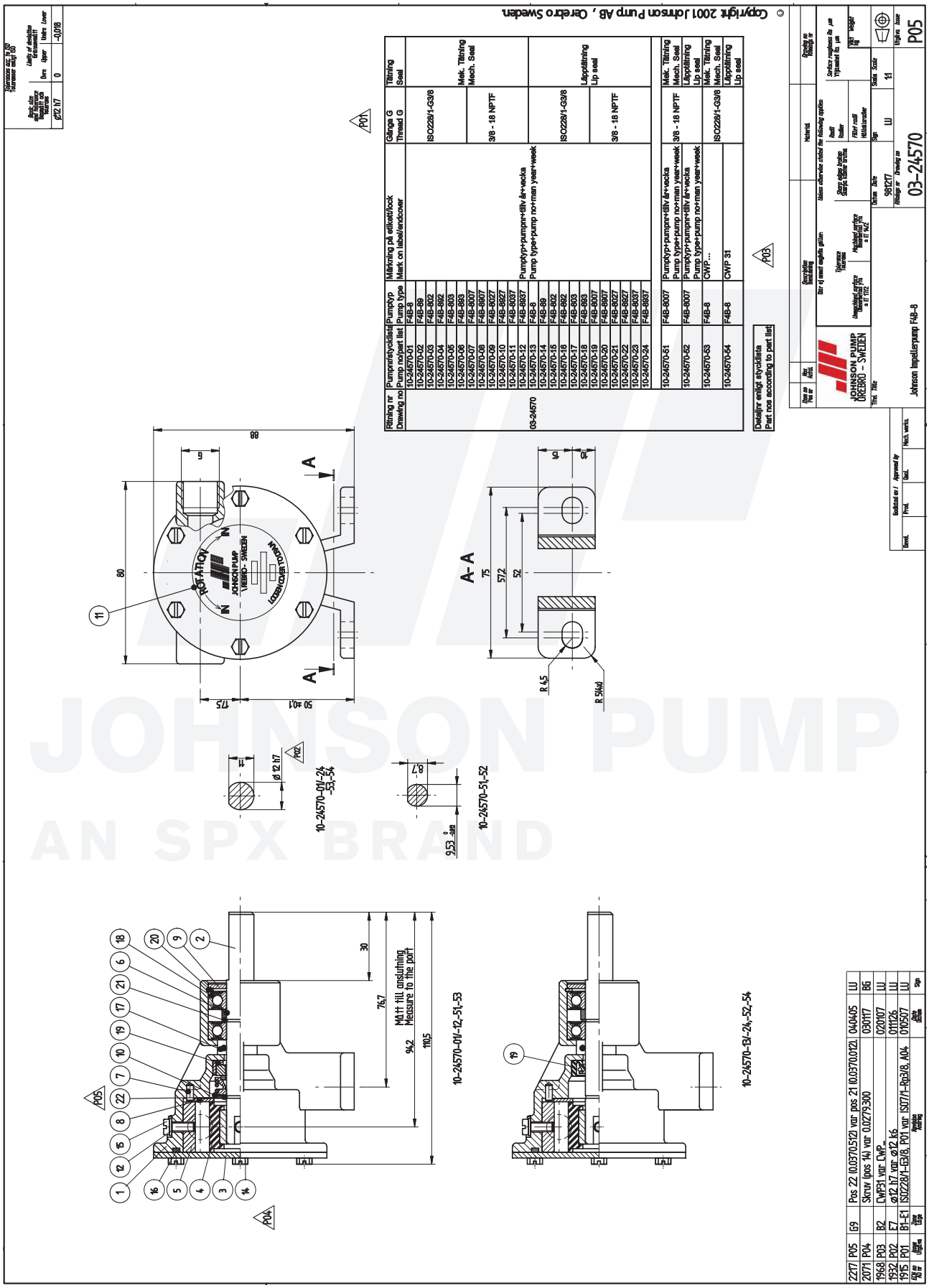
Johnson Impellerpump F4B-8
03-24570
JOHNSON PUMP ÖREBRO - SWEDEN
ROTATION
10-24570-01/-12-51-53
10-24570-13/-24-52-54
10-24570-01/-24 -53-54
10-24570-51-52
Mått till anslutning
Measure to the port
© Copyright 2001 Johnson Pump AB, Örebro Sweden

F5B-8 Impeller pump
Art. No. 10-24073-1

Part. No.	Description GB	Position	Quantity
01-24067-1	BODY F5B-8	1	1
01-45045	SHAFT F5/F7B-8	2	1
01-42398	ENDCOVER F4/F5B-	3	1
08-1027B-1	IMPELLER	4	1
01-42401	GASKET F5B-	5	1
01-42397	CAM 1/1 F5B-	6	1
01-45046	PLATE F5/F7B-8/-5001	7	1
01-45047	PLATE F5/F7B-8	8	1
0.0279.300	SCREW M4X8 ISO1207 A4	10	6
01-46794-05	SCREW 10-32UNFX8 BRASS	11	1
0.2233.001	LIP SEAL 16X28X7 DPSM	12	1
0.2173.402	O-RING 15.3X2.4 SS1586 NBR70	13	1
0.3431.742	BALL BEARING 6203 2 RS1 ST	14	2
0.0371.040	RETAIN. RING BORE D40 DIN472 SPRST	15	1
0.0370.017	EXT. CIRCLIP D17 DIN471 ST	16	1

The product, i.e. concept, design and construction, is the property of SPX Johnson Pump Marine AB

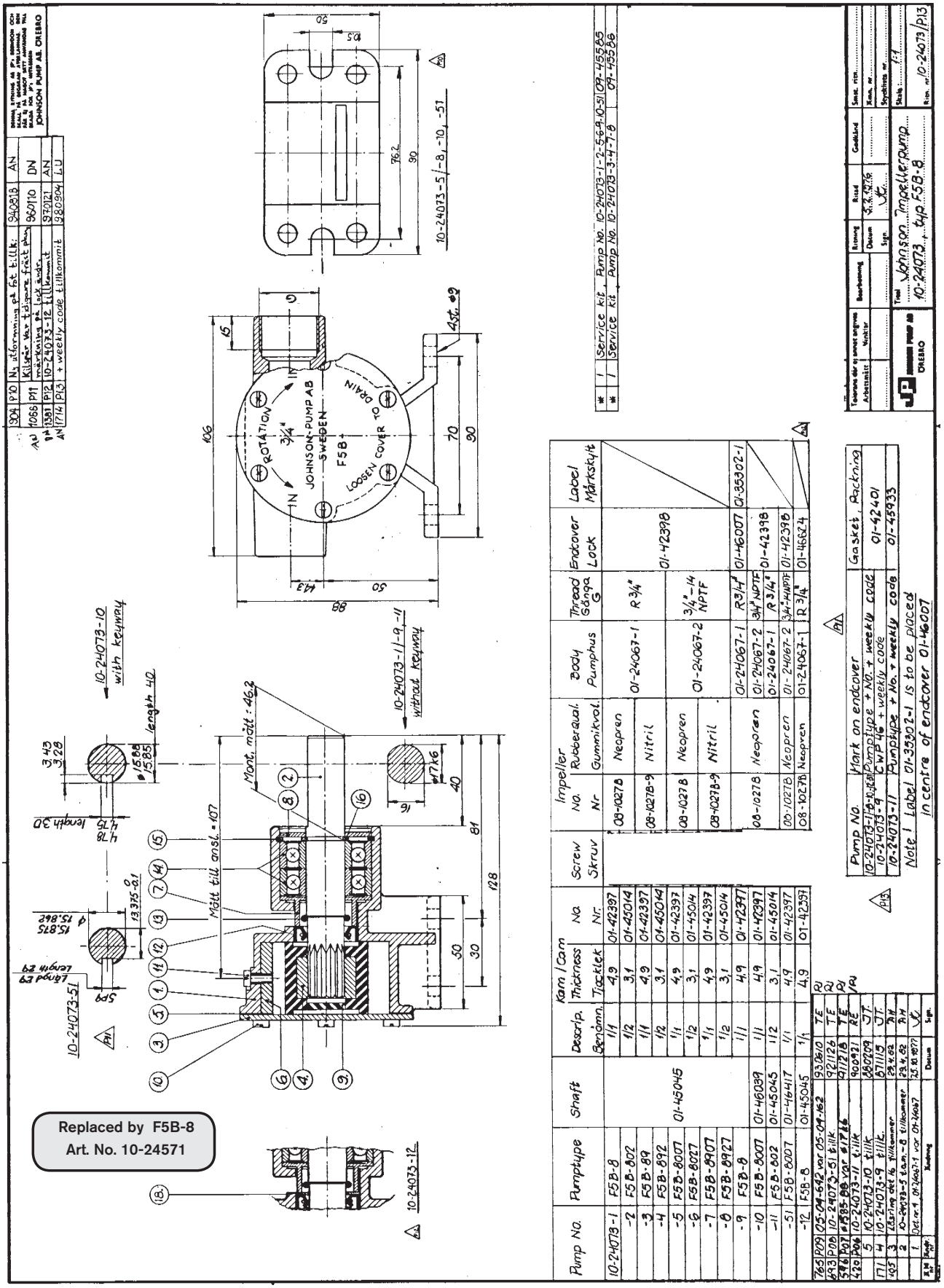

Pump No.	Pumptype	Shaft	Desarp. Benämn.	Kam/Cam Thickness Tjocklek	Kam/Cam No. Nr.	Screw No. Skruv	Impeller No. Nr	Impeller Rubberqual. Gummikval.	Body Pumphus	Thread Gänga G	Endcover Lock	Label Märkskylt
10-24073-1	F5B-8	01-45045	1/1	4,9	01-42397		08-10278	Neopren	01-24067-1	R 3/4"	01-42398	
-2	F5B-802		1/2	3,1	01-45014							
-3	F5B-89		1/1	4,9	01-42397		08-10278-9	Nitril				
-4	F5B-892		1/2	3,1	01-45014							
-5	F5B-8007		1/1	4,9	01-42397		08-10278	Neopren	01-24067-2	3/4"-14 NPTF		
-6	F5B-8027		1/2	3,1	01-45014							
-7	F5B-8907		1/1	4,9	01-42397		08-10278-9	Nitril				
-8	F5B-8927		1/2	3,1	01-45014							
-9	F5B-8		1/1	4,9	01-42397		08-10278	Neopren	01-24067-1	R 3/4"	01-46007	01-35302-1
-10	F5B-8007	01-46039	1/1	4,9	01-42397				01-24067-2	3/4" NPTF	01-42398	
-11	F5B-802	01-45045	1/2	3,1	01-45014				01-24067-1	R 3/4"		
-51	F5B-8007	01-46417	1/1	4,9	01-42397		08-10278	Neopren	01-24067-2	3/4"-14 NPTF	01-42398	
-12	F5B-8	01-45045	1/1	4,9	01-42397		08-10278	Neopren	01-24067-1	R 3/4"	01-46624	

765	P09	05-04-642 var 05-04-162	93.06.10	TE	RJ
493	P08	10-24073-51 tillk.	92.11.26	TE	RJ
576	P07	ø F85-88 var ø 17 F6	91.12.18	RE	RJ
420	P06	10-24073-11 tillk.	90.09.21	RE	RJ
5		10-24073-10 tillk.	88.09.09	JT	
171	4	10-24073-9 tillk.	87.11.15	JT	
195	3	Lösring okt 86 tillkommer	23.10.86	JH	
	2	0-24073-5 t.o.m.-8 tillkommer	23.10.86	JH	
	1	Okt. nr 1 0-24073-1 var 01-24067	23.10.1977	JV	
Ant.	Ändr. nr	Ändring	Datum	Sign.	

F5B-8 Impeller pump
Art No. 10-24571-01

Part No	Description GB	Position	Quantity
01-24573-1	BODY F5B-8	1	1
01-46744	SHAFT F5/F7B-8	2	1
01-46747-2	ENDCOVER F5B NEUTRAL	3	1
08-1027B-1	IMPELLER	4	1
01-42397	CAM 1/1 F5B-	5	1
01-42400	PIN F35B-/F7B/F70B	6	1
01-42399-2	WEAR PLATE F5B	7	1
01-45680	WASHER F5B/F6B/F7B	8	1
01-45047	PLATE F5/F7B-8	9	1
01-46009	SPACER F7B-9	10	1
0.0141.700	TAP BOLT M4X8 ISO4017 A2-70	11	6
01-46794-05	SCREW 10-32UNFX8 BRASS	12	1
0.2173.475	O-RING 57.6X2.4 SS1586 NBR70	13	1
0.2173.402	O-RING 15.3X2.4 SS1586 NBR70	14	1
0.3431.742	BALL BEARING 6203 2 RS1 ST	15	2
0.2247.022	MECH.SEAL COMPL D16	16	1
0.0371.040	RETAIN. RING BORE D40 DIN472 SPRST	17	1
0.0370.017	EXT. CIRCLIP D17 DIN471 ST	18	1
0.0370.516	EXT. CIRCLIP D16 DIN471 PHB	19	1
01-46797	LABEL	20	1
01-46027-1	LABEL DRY RUNNING (4-LANG.)	0	1
0.3444.002	CARTON NO 2 200X155X 95	0	1
IB-501/01	INSTR.MANUAL FB-8 SERIES	0	1
01-47039	BOX LABEL JP 135X45	0	1

F5B-8 Impeller pump
Art No. 10-24571-13

Part No	Description GB	Position	Quantity
01-24573-1	BODY F5B-8	1	1
01-46744	SHAFT F5/F7B-8	2	1
01-46747-2	ENDCOVER F5B NEUTRAL	3	1
08-1027B-1	IMPELLER	4	1
01-42397	CAM 1/1 F5B-	5	1
01-42400	PIN F35B-/F7B/F70B	6	1
01-42399-2	WEAR PLATE F5B	7	1
01-45047	PLATE F5/F7B-8	9	1
01-46009	SPACER F7B-9	10	1
0.0141.700	TAP BOLT M4X8 ISO4017 A2-70	11	6
01-46794-05	SCREW 10-32UNFX8 BRASS	12	1
0.2173.475	O-RING 57.6X2.4 SS1586 NBR70	13	1
0.2173.402	O-RING 15.3X2.4 SS1586 NBR70	14	1
0.3431.742	BALL BEARING 6203 2 RS1 ST	15	2
0.2233.012	LIP SEAL 16X30X7 DPSM	16	1
0.0371.040	RETAIN. RING BORE D40 DIN472 SPRST	17	1
0.0370.017	EXT. CIRCLIP D17 DIN471 ST	18	1
01-46797	LABEL	20	1
01-46027-1	LABEL DRY RUNNING (4-LANG.)	0	1
0.3444.002	CARTON NO 2 200X155X 95	0	1
IB-501/01	INSTR.MANUAL FB-8 SERIES	0	1

The product, i.e. concept, design and construction, is the property of SPX Johnson Pump Marine AB

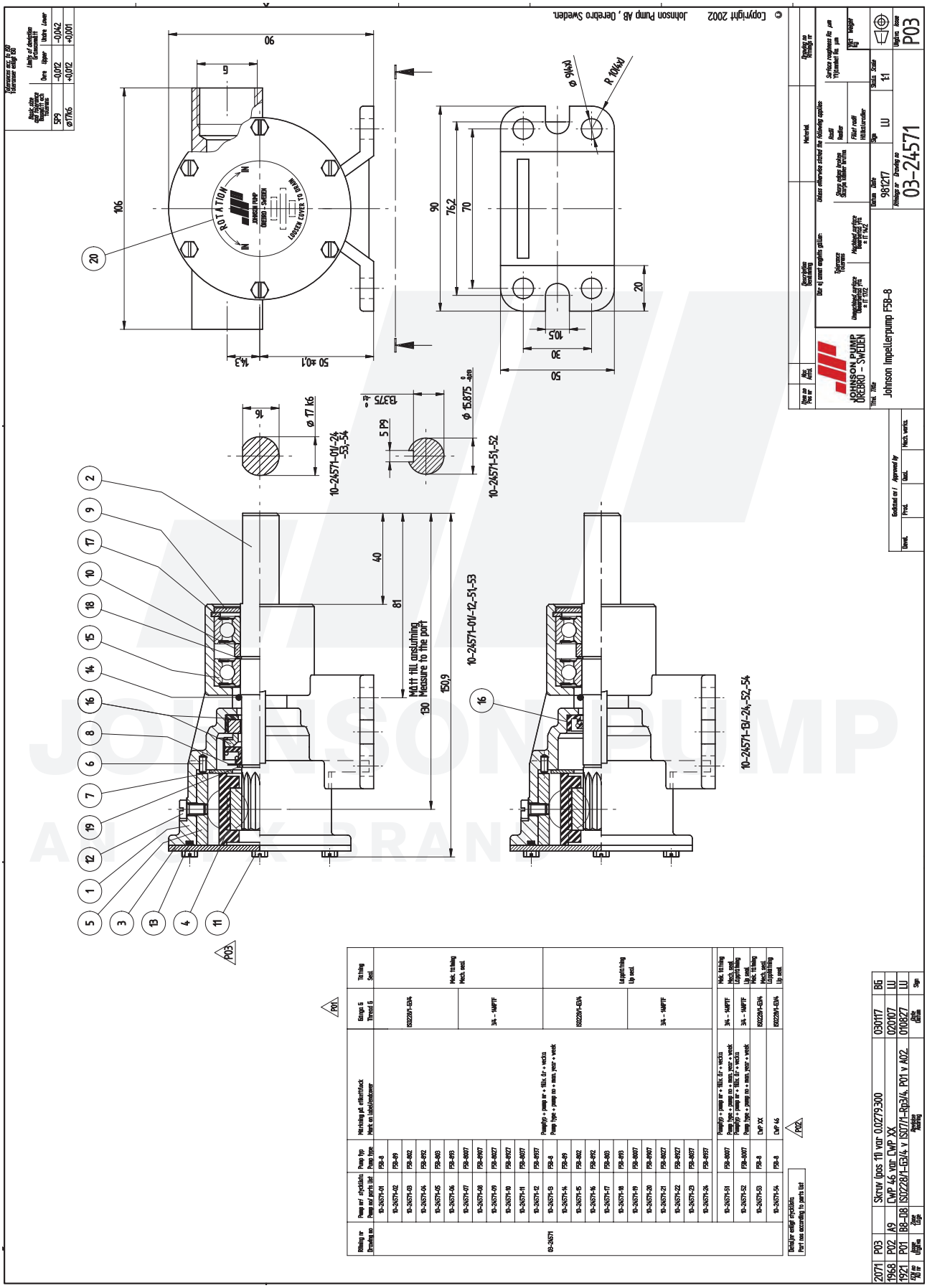

JOHNSON PUMP
ALLTIDE BRANDS

Multipurpose

F7B-8 Impeller pump
Art. No. 10-24070-1

Part. No.	Description GB	Position	Quantity
01-24065-1	BODY F7B-8	1	1
01-45045	SHAFT F5/F7B-8	2	1
01-42441	ENDCOVER F7B-	3	1
08-1028B	IMPELLER	4	1
01-42445	GASKET F4B/F7B-	5	1
01-42679	CAM 1/1 F7B/F70B	6	1
01-45046	PLATE F5/F7B-8/-5001	7	1
01-45047	PLATE F5/F7B-8	8	1
0.0279.033	SCREW M5X8 ISO1207 BRASS	10	6
01-46794-01	SCREW 12-24UNCX9.5 BRASS	11	1
0.2233.001	LIP SEAL 16X28X7 DPSM	12	1
0.2173.402	O-RING 15.3X2.4 SS1586 NBR70	13	1
0.3431.742	BALL BEARING 6203 2 RS1 ST	14	2
0.0371.040	RETAIN. RING BORE D40 DIN472 SPRST	15	1
0.0370.017	EXT. CIRCLIP D17 DIN471 ST	16	1

The product, i.e. concept, design and construction, is the property of SPX Johnson Pump Marine AB

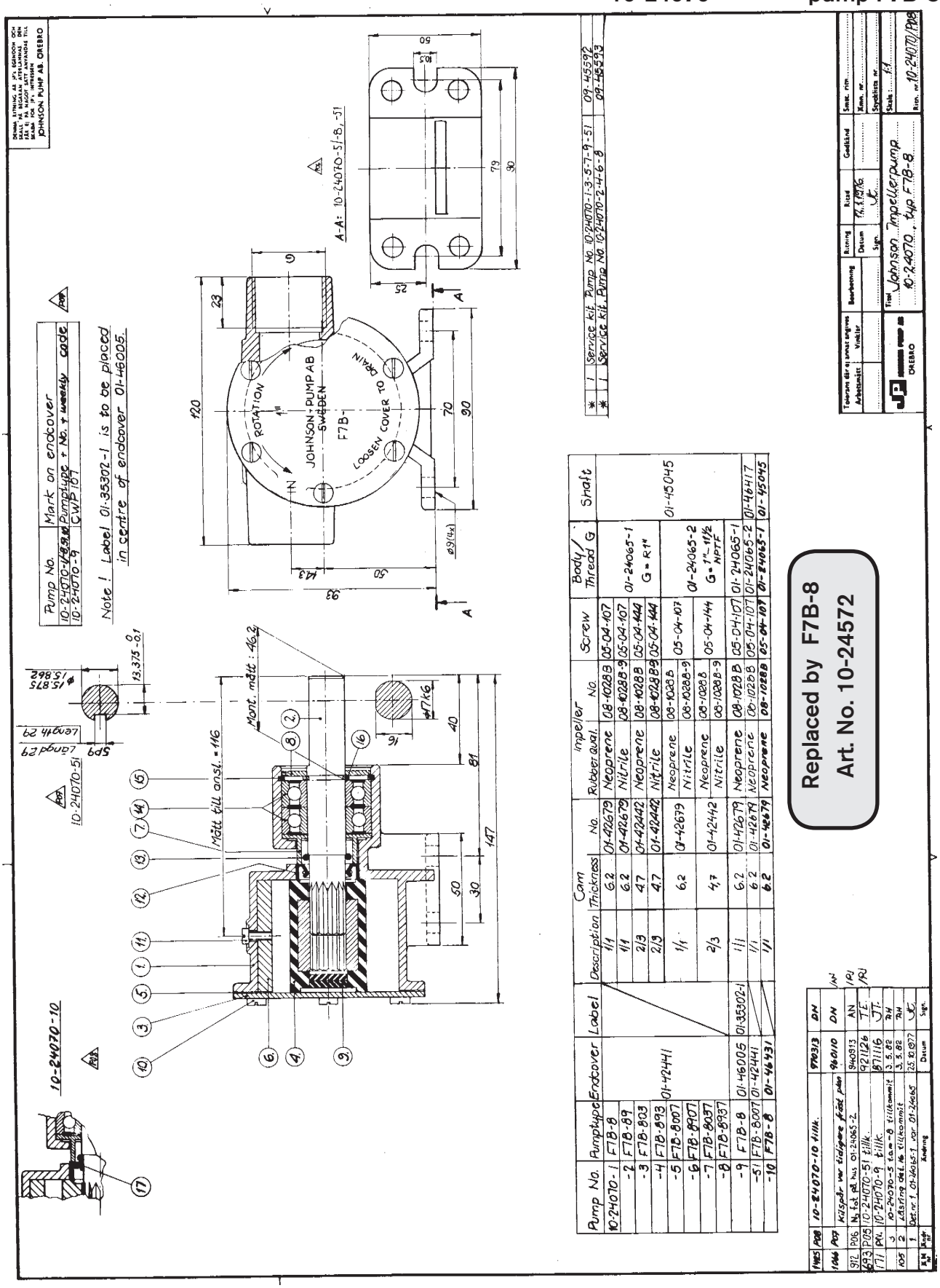

Pump No.	Pumptype	Endcover	Label	Description	Cam Thickness	Cam No.	Impeller Rubber qual.	Impeller No.	Screw	Body/ Thread G	Shaft
10-24070-1	F7B-8	01-42441		1/1	6.2	01-42679	Neoprene	08-1028B	05-04-107	01-24065-1 G = R1"	01-45045
-2	F7B-89			1/1	6.2	01-42679	Nitrile	08-1028-9	05-04-107		
-3	F7B-803			2/3	4.7	01-42442	Neoprene	08-1028B	05-04-144		
-4	F7B-893			2/3	4.7	01-42442	Nitrile	08-1028B-9	05-04-144		
-5	F7B-8007			1/1	6.2	01-42679	Neoprene	08-1028B	05-04-107	01-24065-2 G = 1"-11½ NPTF	
-6	F7B-8907						Nitrile	08-1028-9			
-7	F7B-8037			2/3	4.7	01-42442	Neoprene	08-1028-8	05-04-144		
-8	F7B-8937						Nitrile	08-1028-9			
-9	F7B-8	01-46005	01-35302-1	1/1	6.2	01-42679	Neoprene	08-1028B	05-04-107	01-24065-1	01-46417
-51	F7B-8007	01-42441		1/1	6.2	01-42679	Neoprene	08-1028B	05-04-107	01-24065-2	
-10	F7B-8	01-46431		1/1	6.2	01-42679	Neoprene	08-1028B	05-04-107	01-24065-1	01-45045

Ändring	Datum	Sign.
10-24070-10 tillk.	970313	DN
Kritspår vid pump fast plan	960110	DN
Nytt fast nr. 01-24065-2.	940813	AN
10-24070-51 tillk.	921126	TE
10-24070-9 tillk.	871116	JT
10-24070-5 t.o.m.-8 tillkommit	3.5.82	PH
Läsring ökad, 16 tillkommit	3.5.82	PH
Bet.nr. 1, 01-24065-1 var 01-24065	125 to 077	

Multipurpose

F7B-8 Impeller pump
Art No. 10-24572-01

Part No	Description GB	Position	Quantity
01-24574-3	BODY F7B-8	1	1
01-46744	SHAFT F5/F7B-8	2	1
01-46797	LABEL	20	1
01-46648-3	ENDCOVER F7B	3	1
08-1028B	IMPELLER	4	1
01-42679	CAM 1/1 F7B/F70B	5	1
01-42400	PIN F35B-/F7B/F70B	6	1
01-46798-2	WEAR PLATE F7B	7	1
01-45680	WASHER F5B/F6B/F7B	8	1
01-45047	PLATE F5/F7B-8	9	1
01-46009	SPACER F7B-9	10	1
0.0279.301	SCREW M5X8 ISO1207 A4	11	6
01-46794-01	SCREW 12-24UNCX9.5 BRASS	12	1
0.2172.012	O-RING 63,22X1,78 NBR70	13	1
0.2173.402	O-RING 15.3X2.4 SS1586 NBR70	14	1
0.3431.742	BALL BEARING 6203 2 RS1 ST	15	2
0.2247.022	MECH.SEAL COMPL D16	16	1
0.0371.040	RETAIN. RING BORE D40 DIN472 SPRST	17	1
0.0370.017	EXT. CIRCLIP D17 DIN471 ST	18	1
0.0370.516	EXT. CIRCLIP D16 DIN471 PHB	19	1
01-46027-1	LABEL DRY RUNNING (4-LANG.)	0	1
0.3444.002	CARTON NO 2 200X155X 95	0	1
IB-501/01	INSTR.MANUAL FB-8 SERIES	0	1
01-47039	BOX LABEL JP 135X45	0	1

F7B-8 Impeller pump
Art No. 10-24572-13

Part No	Description GB	Position	Quantity
01-24574-3	BODY F7B-8	1	1
01-46744	SHAFT F5/F7B-8	2	1
01-46648-3	ENDCOVER F7B	3	1
08-1028B	IMPELLER	4	1
01-42679	CAM 1/1 F7B/F70B	5	1
01-42400	PIN F35B-/F7B/F70B	6	1
01-46798-2	WEAR PLATE F7B	7	1
01-45047	PLATE F5/F7B-8	9	1
01-46009	SPACER F7B-9	10	1
0.0279.301	SCREW M5X8 ISO1207 A4	11	6
01-46794-01	SCREW 12-24UNCX9.5 BRASS	12	1
0.2172.012	O-RING 63,22X1,78 NBR70	13	1
0.2173.402	O-RING 15.3X2.4 SS1586 NBR70	14	1
0.3431.742	BALL BEARING 6203 2 RS1 ST	15	2
0.2233.012	LIP SEAL 16X30X7 DPSM	16	1
0.0371.040	RETAIN. RING BORE D40 DIN472 SPRST	17	1
0.0370.017	EXT. CIRCLIP D17 DIN471 ST	18	1
01-46797	LABEL	20	1
01-46027-1	LABEL DRY RUNNING (4-LANG.)	0	1
0.3444.002	CARTON NO 2 200X155X 95	0	1
IB-501/01	INSTR.MANUAL FB-8 SERIES	0	1

The product, i.e. concept, design and construction, is the property of SPX Johnson Pump Marine AB

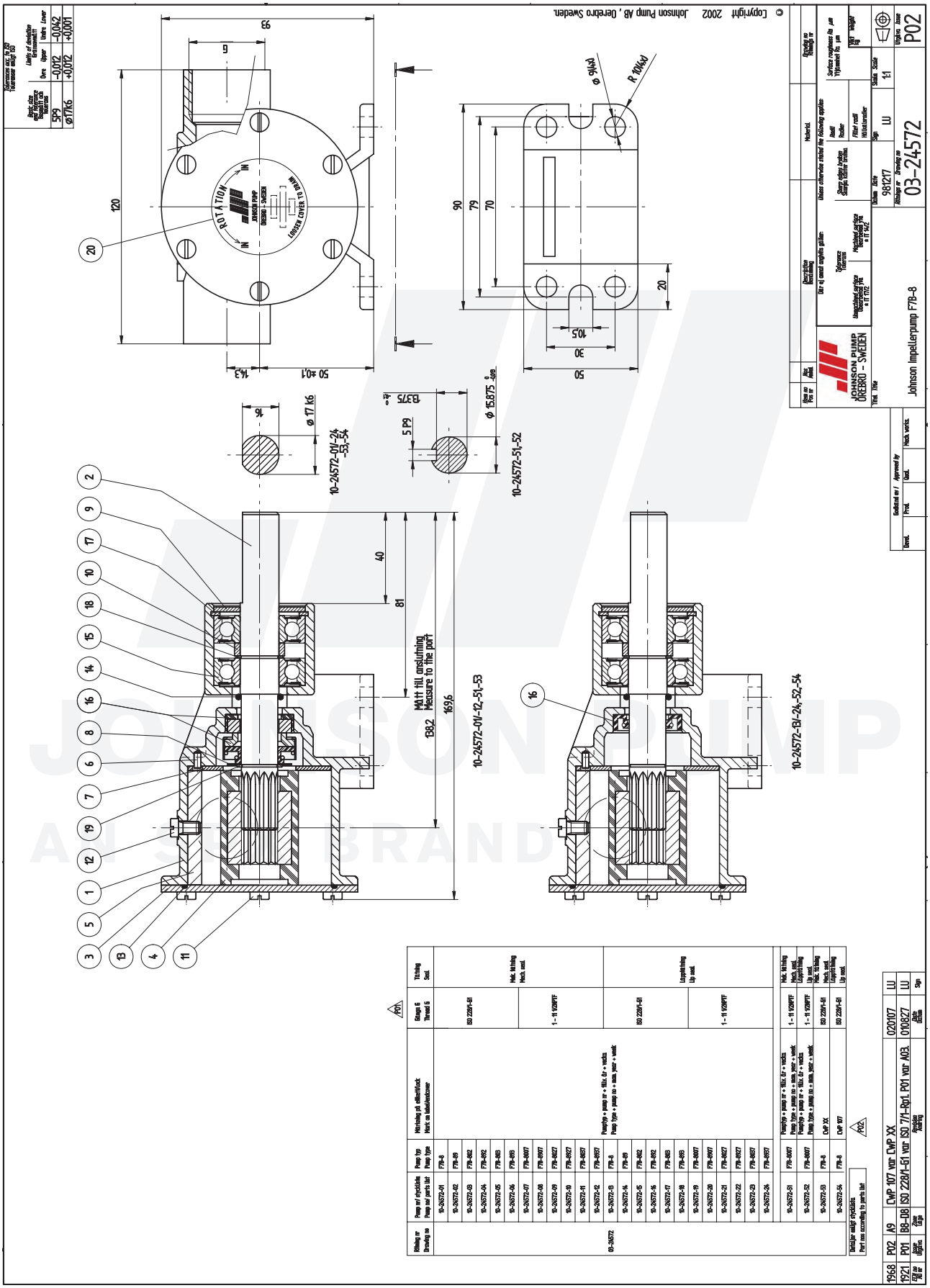

JOHNSON PUMP
ALL SIZES BRAND

Multipurpose

F8B-8 Impeller pump
Art. No. 10-13021-1

Service Kit No. 09-45575

Part no.	Description GB	Position	Quantity
01-13164-1	BODY F8B-8/5001	1	1
01-35132	SHAFT F8B-8	2	1
01-42680	CAM 1/1 F8B-	3	1
08-819B	IMPELLER F8B-9	4	1
01-42422-1	ENDCOVER F8B/F9B-	5	1
01-42424	GASKET F8B/F9B-	6	1
01-42423	WEARPLATE F8/F80/F9/F95B-	7	1
01-42426	PIN	8	1
01-45374	SPACER F8B-8/-5001	9	1
01-45380	WASHER F8B-8	10	1
0.3431.780	BALL BEARING 6305-2RS1	11	2
0.0371.062	RETAIN. RING BORE D62 DIN472 SPRST	12	1
0.0138.134	TAP BOLT M6X12 DIN933 A2	13	5
01-46794-02	SCREW 1/4"-20UNCX10 AL.BRONZE	14	1
0.0502.231	KEY 8X7-28 DIN6885A C45K	15	1
0.2247.008	MECH.SEAL COMPL FA25.47.14	17	1
0.0370.525	EXT. CIRCLIP D25 DIN471 ST	18	2
0.2172.573	O-RING 23.4X3.53 BS1806 NBR70	21	1
01-46027-1	LABEL DRY RUNNING (4-LANG.)	0	1
0.3444.004	CARTON NO 4 290X195X180	0	1
IB-501/01	INSTR.MANUAL FB-8 SERIES	0	1
09-46506	WARNING PACKAGE, INDUSTRIAL	0	1
01-47039	BOX LABEL JP 135X45	0	1

The product, i.e. concept, design and construction, is the property of SPX Johnson Pump Marine AB

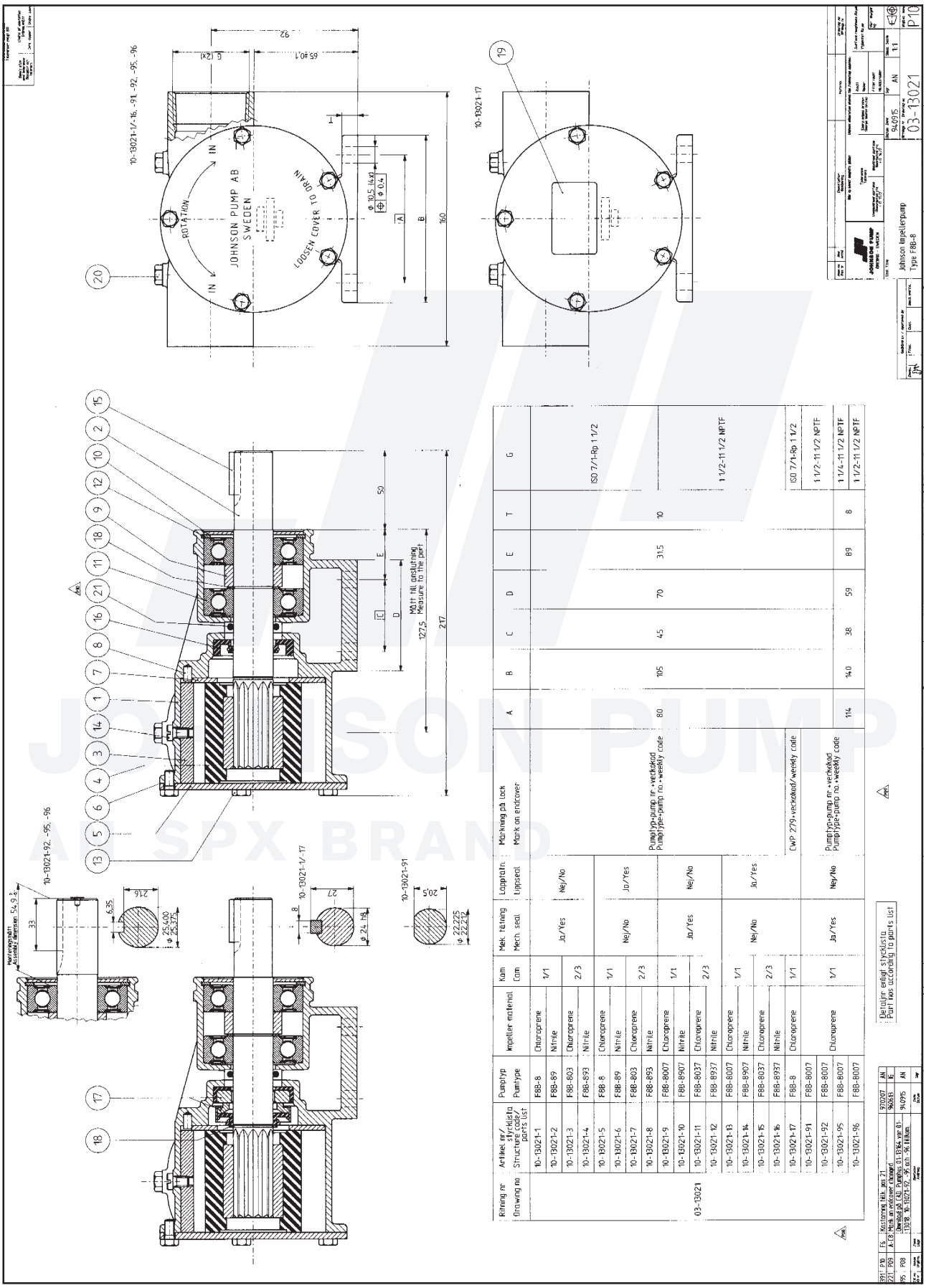

Ritning nr / Drawing no	Artikel nr / Structure code / parts list	Pumptyp / Pumtype	Impeller material	Kam / Cam	Mek. tätning / Mech. seal	Läppt.tn. / Lipseal	Märkning på lock / Mark on endcover	A	B	C	D	E	T	G
03-13021	10-13021-1	F8B-8	Chloroprene	1/1	Ja/Yes	Nej/No	Pumptyp+pump nr+veckokod Pumptype+pump no.+weekly code	80	105	45	70	31.5	10	ISO 7/1-Rp 1 1/2
	10-13021-2	F8B-89	Nitrile											
	10-13021-3	F8B-803	Chloroprene	2/3										
	10-13021-4	F8B-893	Nitrile											
	10-13021-5	F8B-8	Chloroprene	1/1	Nej/No	Ja/Yes								
	10-13021-6	F8B-89	Nitrile											
	10-13021-7	F8B-803	Chloroprene	2/3										
	10-13021-8	F8B-893	Nitrile											
	10-13021-9	F8B-8007	Chloroprene	1/1	Ja/Yes	Nej/No								1 1/2-11 1/2 NPTF
	10-13021-10	F8B-8907	Nitrile											
	10-13021-11	F8B-8037	Chloroprene	2/3										
	10-13021-12	F8B-8937	Nitrile											
	10-13021-13	F8B-8007	Chloroprene	1/1	Nej/No	Ja/Yes								
	10-13021-14	F8B-8907	Nitrile											
	10-13021-15	F8B-8037	Chloroprene	2/3										
	10-13021-16	F8B-8937	Nitrile											
	10-13021-17	F8B-8	Chloroprene	1/1			CWP 279+veckokod/weekly code							ISO 7/1-Rp 1 1/2
	10-13021-91	F8B-8007												1 1/2-11 1/2 NPTF
	10-13021-92	F8B-8007	Chloroprene	1/1	Ja/Yes	Nej/No	Pumptyp+pump nr+veckokod Pumptype+pump no.+weekly code	114	140	38	59	89	8	1 1/4-11 1/2 NPTF
	10-13021-95	F8B-8007												1 1/2-11 1/2 NPTF
	10-13021-96	F8B-8007												

Detaljrit enligt stycklista
Part nos according to parts list

391- P16	F6	Kastanjevej Hälsingborg 21		970707	AN
271- P09	A.T.B.	Mått på endcover ändrade		960613	KJ
195- P08		Ändrad på Kull. Pumpnr. 11-F16 ver 01-		940915	AN
		13930, 8-13021-92 och -96 tillkom.			
Ersätt av	Ersatt av	Ersatt av	Datum	Sign	

JOHNSON PUMP
A SPX BRAND

Multipurpose

10-24210 pump F5B-3000

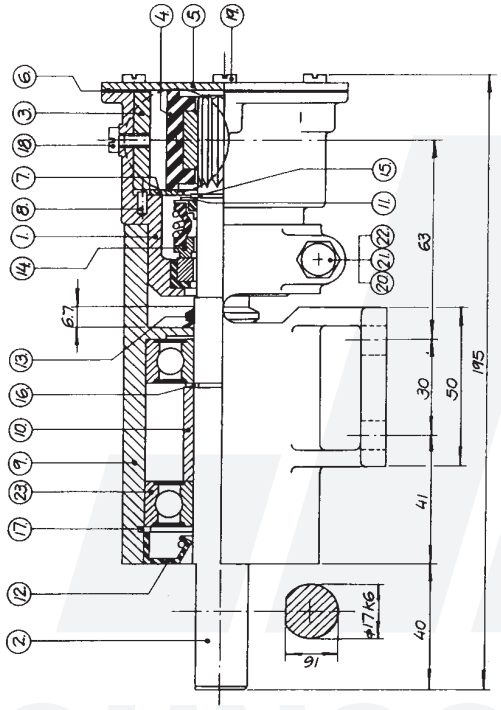

Part No. Del nr.	Nos. Antal	Description Benämning	Material
23	2	Kulager – Ballbearing	05-08-22
22	1	Mutter – Nut	05-05-115
21	1	Bricka – Washer	05-01-115
20	1	Skruv – Screw	05-04-105
19	6	Skruv – Screw	05-04-115
18	1	Skruv – Screw	See table
17	1	Låsring – Retaining ring	05-34-117
16	1	Låsring – Retaining ring	05-34-21
15	1	Låsring – Retaining ring	05-34-105
14	1	Mek. tätn. – Mech seal	05-20-115
13	1	V-ring	05-19-503
12	1	Läppätn. – Lipseal	05-29-503
11	1	Bricka – Washer	05-01-121
10	1	Distanshylsa – Spacer	01-45170
9	1	Lagerfot – Pedestal	01-24208
8	1	Stift – Pin	01-42400
7	1	Slitbricka – Wearplate	01-42399
6	1	Packning – Gasket	01-42401
5	1	Lock – Endcover	01-42398
4	1	Impeller	See table
3	1	Kam – Cam	See table
2	1	Axel – Shaft	01-35177
1	1	Pumphus – Body	See table

The drawing is the property of JOHNSON PUMP in accordance with prevailing law. Detta ritning är JP:s egendom enligt gällande lag.

Tolerances unless otherwise indicated ISO 2768 m
Tolerans om ej annat anvisats

Unmachined surface Råvarumotstånd
Obearbetad yta

Material specification Grade: AISI 316
Material specifikation Sort: AISI 316

Sharp edges broken Skarpa kanter avrivna
Burrs not permitted Grader inte tillåts
Radius unless indicated 1 mm
Radier om ej annat anvisats

Date: 83-02-25
Datum
Sign: J. A

JOHNSON PUMP AB

Title / Titel: Johnson Impellerpump
Type F5B-3000

Scale / Skala 1:1

10-24210

Pump No. Pump Nr.	Pumptype Pumptyp	Impeller (4) Rubberaxel. Gummikval.	Impeller (4) No. Nr.	Cam Kam (3) Thickness Tocklek	Cam Kam (3) No. Nr.	Screw Skruv (18)	Body Pumphus (1)	Thread G Gänga
10-24210-1	F5B-3000	Neoprene	08-1027 B	1/1 4.9	01-42397	05-04-117	01-31927-2	R3/4"
10-24210-2	F5B-3900	Nitrile	08-1027 B-9					
10-24210-3	F5B-3020	Neoprene	08-1027 B	1/2 3.1	01-45014	05-04-175		
10-24210-4	F5B-3920	Nitrile	08-1027 B-9					
10-24210-5	F5B-30007	Neoprene	08-1027 B	1/1 4.9	01-42397	05-04-117	01-31927-4	3/4"-14 NPTF
10-24210-6	F5B-39007	Nitrile	08-1027 B-9					
10-24210-7	F5B-30207	Neoprene	08-1027 B	1/2 3.1	01-45014	05-04-175		
10-24210-8	F5B-39207	Nitrile	08-1027 B-9					

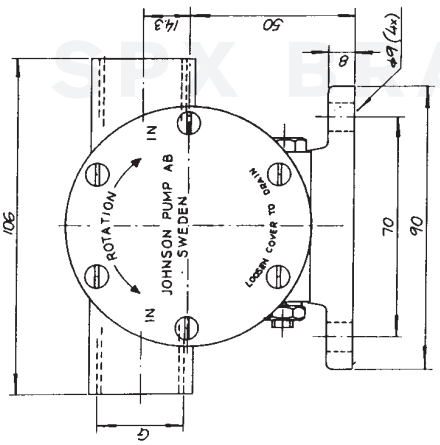

1. Axel ändrad 860123 TE

JOHNSON PUMP
AN SPX BRAND

The product, i.e. concept, design and construction, is the property of SPX Johnson Pump Marine AB

10-24209 pump F7B-3000

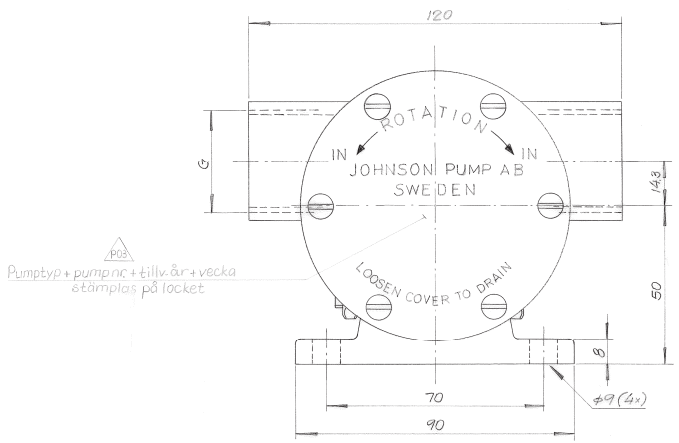

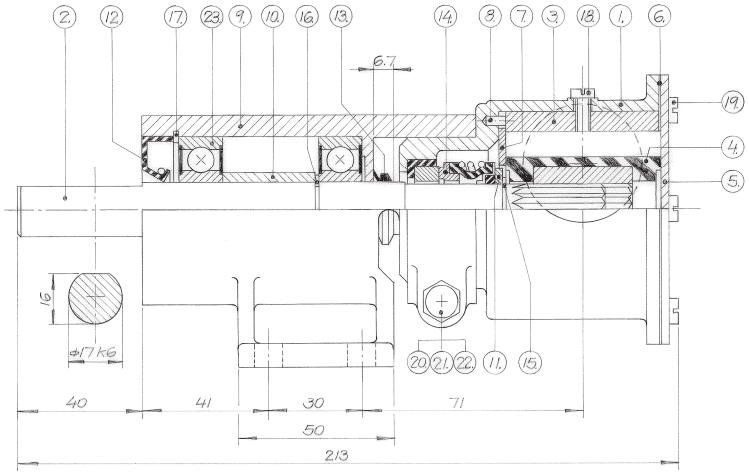

F7B-3000 Impeller pump
Art. No. 10-24209-1

Pump No. Pump Nr.	Pumptype Pumptyp	Impeller (4) Rubber qual. Gummikval.	Impeller (4) No. Nr.	Cam Kam (3) Thickness Tjocklek	Cam Kam (3) No. Nr.	Screw Skruv (18)	Body Pumphus (1)	Thread Gänga G
10-24209-1	F7B-3000	Neoprene	08-1028 B	1/1 6.2	01-42679	05-04-107	01-21862-2	R1"
10-24209-2	F7B-3900	Nitrile	08-1028 B-9					
10-24209-3	F7B-3030	Neoprene	08-1028 B	2/3 4.7	01-42442	05-04-144		
10-24209-4	F7B-3930	Nitrile	08-1028 B-9					
10-24209-5	F7B-3020	Neoprene	08-1028 B	1/2 3.3	01-42584	05-04-125		
10-24209-6	F7B-3920	Nitrile	08-1028 B-9					
10-24209-7	F7B-30007	Neoprene	08-1028 B	1/1 6.2	01-42679	05-04-107	01-21862-4	1"-11 1/2 NPTF
10-24209-8	F7B-39007	Nitrile	08-1028 B-9					
10-24209-9	F7B-30307	Neoprene	08-1028 B	2/3 4.7	01-42442	05-04-144		
10-24209-10	F7B-39307	Nitrile	08-1028 B-9					
10-24209-11	F7B-30207	Neoprene	08-1028 B	1/2 3.3	01-42584	05-04-125		
10-24209-12	F7B-39207	Nitrile	08-1028 B-9					
10-24209-13	F7B-3900	— " —	— " —	1/1 6.2	01-42679	05-04-107	01-21862-2	R1"

Part No.	Description GB	Position	Quantity
01-21862-2	BODY F7B-1/-3/-9	1	1
01-35177	SHAFT F5B/F7B-3000	2	1
01-42679	CAM 1/1 F7B/F70B	3	1
08-1028B	IMPELLER	4	1
01-42441	ENDCOVER F7B-	5	1
01-42445	GASKET F4B/F7B-	6	1
01-42443	WEARPLATE F7B/F70B	7	1
01-42400	PIN F35B-/F7B/F70B	8	1
01-24208	PEDESTAL F5/F7B-3000	9	1
01-45170	SPACER F5B/F7B-3000/-5000	10	1
01-45174	WASHER F7B-3000/-5000	11	1
0.2234.004	LIP SEAL 17X47X10 WA	12	1
0.2230.015	V-RING 15.5-17.5 NBR/65SH	13	1
0.2247.050	MECH.SEAL COMPL 5/8" 106BT2C1	14	1
0.0370.516	EXT. CIRCLIP D16 DIN471 PHB	15	1
0.0370.017	EXT. CIRCLIP D17 DIN471 ST	16	1
0.0371.047	RETAIN. RING BORE D47 DIN472 SPRST	17	1
01-46794-01	SCREW 12-24UNCX9.5 BRASS	18	1
01-46794-05	SCREW 10-32UNFX8 BRASS	19	6
0.0144.001	BOLT 1/4"-20UNCX57 SS1943 STZN	20	1
0.0353.402	WASHER D6,5 X D11,8 X1,6	21	1
0.0194.001	NUT 1/4"-20UNC SS1989 8.8ZN	22	1
0.3431.778	BALL BEARING 6303-2RSH	23	2

Part No. Det.nr.	Nos. Antal	Description Benämning	Material	Dimension	Draw. No. Ritn.nr.

This drawing is the property of JP. Protected in accordance with prevailing law. Denna ritning är JP:s egendom. Skyddad enligt gällande lag.

Tolerance unless otherwise noted
Tolerans där ej annat angives
Unmachined surface ±IT 17/2
Obearbetade ytor ±IT 14/2
Machined surface ±IT 14/2
Bearbetade ytor

Sharp edges broken
Skarpa kanter brytes
Burrs not permitted
Grader tillåts icke

Radius unless otherwise noted
Radie där ej annat angives

Ritad
Datum 93-02-23
Sign. JE. /lal

JOHNSON PUMP AB
ÖREBRO SWEDEN
Tel. 019/11 95 50

Title / Titel: Johnson Impellerpump
Type F7B-3000, 10-24209

Scale / Skala 1:1
Draw. No. / Ritn. nr. 10-24209/P03

AM.nr.	Rev. No. Ändr. nr.	Revision Ändring	Date Datum	Sign.
2484	P03	Info om lockstämpling tillkom.	060628	LU
2314	P02	Pump nr 10-24209-13 tillk	050413	TE
	P01	Axel ändrad	860123	JE.

F8B-3000 Impeller pump
Art. No. 10-13024-1

Part no.	Description GB	Position	Quantity
01-11206	BODY F8B-	1	1
01-42422-1	ENDCOVER F8B/F9B-	2	1
01-35137	SHAFT F8/F9B-3000	3	1
01-42680	CAM 1/1 F8B-	4	1
08-819B	IMPELLER F8B-9	5	1
01-42424	GASKET F8B/F9B-	6	1
01-42426	PIN	7	1
01-42423	WEARPLATE F8/F80/F9/F95B-	8	1
01-13020	PEDESTAL F8/F9B-3000/-5000	9	1
01-42747	SPACER F8/F9	10	1
0.0502.231	KEY 8X7-28 DIN6885A C45K	11	1
0.2230.319	V-GASKET V 25A NBR70	12	1
0.2247.051	MECH.SEAL COMPL 1" 106BT2C1	13	1
0.3431.780	BALL BEARING 6305-2RS1	14	2
0.0371.062	RETAIN. RING BORE D62 DIN472 SPRST	15	1
0.0370.525	EXT. CIRCLIP D25 DIN471 ST	16	2
0.2234.337	LIP SEAL 25X62X10 BA	17	1
01-46794-02	SCREW 1/4"-20UNCX10 AL.BRONZE	19	1
0.0144.200	BOLT 1/4"-20UNCX1/2" SS1943 A4	20	5
0.0144.002	BOLT 5/16"-18UNCX20 SS1943	21	4
0.0353.309	SPRINGWASH D8.2 DIN127 STZN	22	4

The product, i.e. concept, design and construction, is the property of SPX Johnson Pump Marine AB

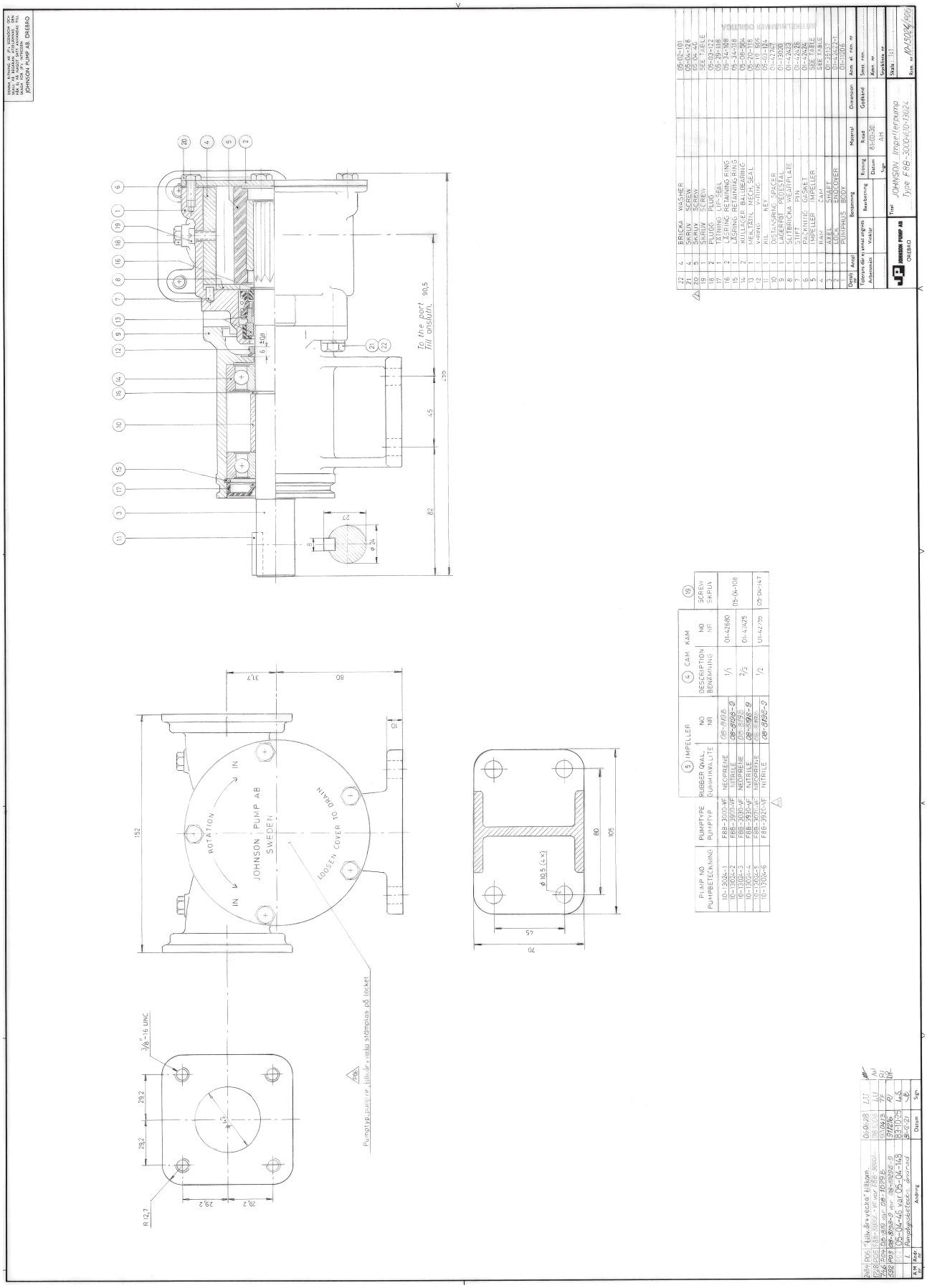

Multipurpose

F8B-3000-TSS Impeller pump
Art No. 10-13175-01

Part No	Description GB	Position	Quantity
01-13002-1	BODY F8B-	1	1
01-42422-1	ENDCOVER F8B/F9B-	2	1
01-35137	SHAFT F8/F9B-3000	3	1
01-42680	CAM 1/1 F8B-	4	1
08-819B	IMPELLER F8B-9	5	1
01-42424	GASKET F8B/F9B-	6	1
01-42426	PIN	7	1
01-42423	WEARPLATE F8/F80/F9/F95B-	8	1
01-13020	PEDESTAL F8/F9B-3000/-5000	9	1
01-42747	SPACER F8/F9	10	1
0.0502.231	KEY 8X7-28 DIN6885A C45K	11	1
0.2230.319	V-GASKET V 25A NBR70	12	1
0.2247.051	MECH.SEAL COMPL 1" 106BT2C1	13	1
0.3431.780	BALL BEARING 6305-2RS1	14	2
0.0371.062	RETAIN. RING BORE D62 DIN472 SPRST	15	1
0.0370.525	EXT. CIRCLIP D25 DIN471 ST	16	2
0.2234.337	LIP SEAL 25X62X10 BA	17	1
01-46794-02	SCREW 1/4"-20UNCX10 AL.BRONZE	19	1
0.0144.200	BOLT 1/4"-20UNCX1/2" SS1943 A4	20	5
0.0144.002	BOLT 5/16"-18UNCX20 SS1943	21	4
0.0353.309	SPRINGWASH D8.2 DIN127 STZN	22	4

The product, i.e. concept, design and construction, is the property of SPX Johnson Pump Marine AB

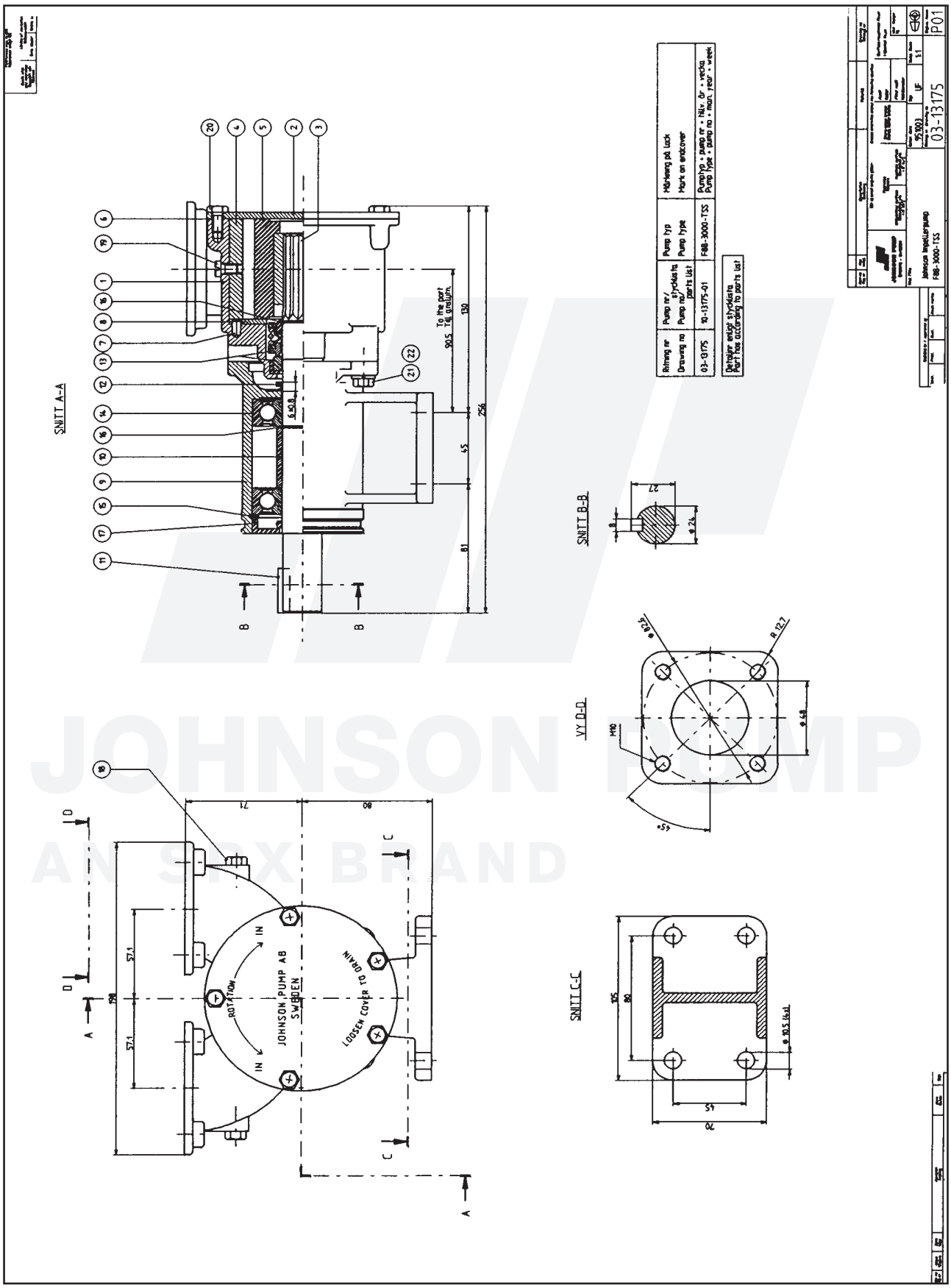

JOHNSON PUMP
AN SPX BRAND

F9B-3000 Impeller pump
Art. No. 10-13026-1

Part no.	Description GB	Position	Quantity
01-11358-1	BODY F9B-	1	1
01-42422-1	ENDCOVER F8B/F9B-	2	1
01-35137	SHAFT F8/F9B-3000	3	1
01-43137	CAM 1/1 F9B-	4	1
08-802B	IMPELLER	5	1
01-42424	GASKET F8B/F9B-	6	1
01-42426	PIN	7	1
01-42423	WEARPLATE F8/F80/F9/F95B-	8	1
01-13020	PEDESTAL F8/F9B-3000/-5000	9	1
01-42747	SPACER F8/F9	10	1
0.2234.337	LIP SEAL 25X62X10 BA	11	1
0.2230.319	V-GASKET V 25A NBR70	12	1
0.2247.051	MECH.SEAL COMPL 1" 106BT2C1	13	1
0.3431.780	BALL BEARING 6305-2RS1	14	2
0.0371.062	RETAIN. RING BORE D62 DIN472 SPRST	15	1
0.0370.525	EXT. CIRCLIP D25 DIN471 ST	16	2
0.0502.231	KEY 8X7-28 DIN6885A C45K	17	1
01-46794-02	SCREW 1/4"-20UNCX10 AL.BRONZE	19	1
0.0144.200	BOLT 1/4"-20UNCX1/2" SS1943 A4	20	5
0.0144.002	BOLT 5/16"-18UNCX20 SS1943	21	4
0.0353.309	SPRINGWASH D8.2 DIN127 STZN	22	4

The product, i.e. concept, design and construction, is the property of SPX Johnson Pump Marine AB

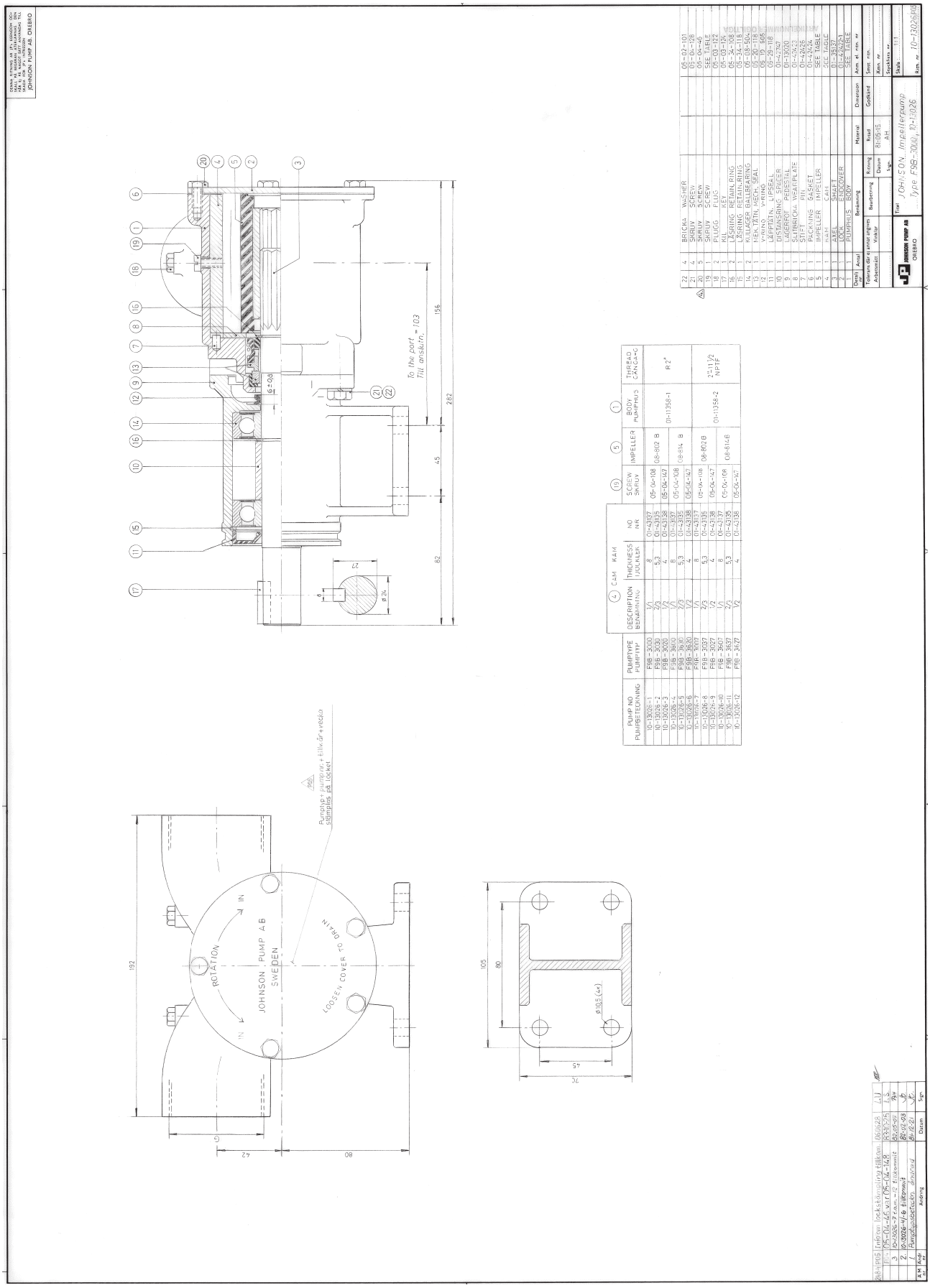
JOHNSON PUMP AB
ÖREBRO
Type F9B-3000, 10-13026
To the port = 103
Till anslutn.
ROTATION
IN
JOHNSON PUMP A.B
SWEDEN
LOOSEN COVER TO DRAIN
Pumptyp + pumpnr + tillv.år + vecka stämplas på locket
PUMP NO. PUMPBETECKNING
PUMPTYPE PUMPTYP
DESCRIPTION BENÄMNING
THICKNESS TJOCKLEK
NO. NR
SCREW SKRUV
IMPELLER
BODY PUMPHUS
THREAD GÄNGA
F9B-3000
F9B-3020
F9B-3037
F9B-3027
F9B-3017
F9B-3007
F9B-3672
JOHNSON PUMP AB
ÖREBRO
Material
Dimension
Godkänd
Skala 1:1
Antal
Benämning
Ritning
Rätad
Datum
Sign.
Ersatts av
Ersätter
Ändring
Datum
Sign.
Tillv.
Ark. nr 10-13026

F9B-3000-TSS Impeller pump
Art. No. 10-13177-01

Part no.	Description GB	Position	Quantity
01-13003	BODY F9B	1	1
01-42422-1	ENDCOVER F8B/F9B-	2	1
01-35137	SHAFT F8/F9B-3000	3	1
01-43137	CAM 1/1 F9B-	4	1
08-802B	IMPELLER	5	1
01-42424	GASKET F8B/F9B-	6	1
01-42426	PIN	7	1
01-42423	WEARPLATE F8/F80/F9/F95B-	8	1
01-13020	PEDESTAL F8/F9B-3000/-5000	9	1
01-42747	SPACER F8/F9	10	1
0.2234.337	LIP SEAL 25X62X10 BA	11	1
0.2230.319	V-GASKET V 25A NBR70	12	1
0.2247.051	MECH.SEAL COMPL 1" 106BT2C1	13	1
0.3431.780	BALL BEARING 6305-2RS1	14	2
0.0371.062	RETAIN. RING BORE D62 DIN472 SPRST	15	1
0.0370.525	EXT. CIRCLIP D25 DIN471 ST	16	2
0.0502.231	KEY 8X7-28 DIN6885A C45K	17	1
01-46794-02	SCREW 1/4"-20UNCX10 AL.BRONZE	19	1
0.0144.200	BOLT 1/4"-20UNCX1/2" SS1943 A4	20	5
0.0144.002	BOLT 5/16"-18UNCX20 SS1943	21	4
0.0353.309	SPRINGWASH D8.2 DIN127 STZN	22	4

The product, i.e. concept, design and construction, is the property of SPX Johnson Pump Marine AB

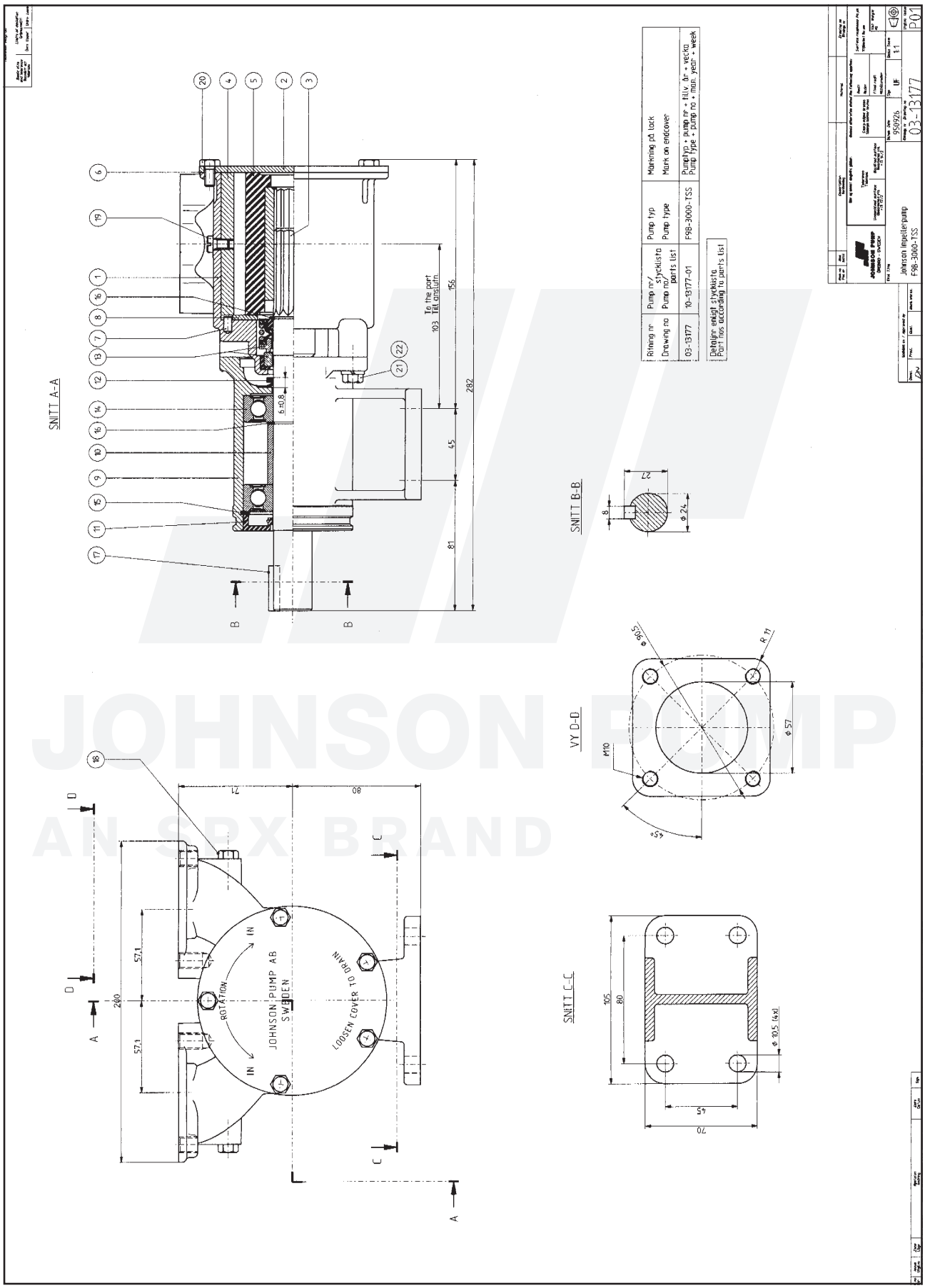

JOHNSON PUMP
AN SPX BRAND

Multipurpose

F9B-3000 Impeller pump
Art. No. 10-13225-01

Part no.	Description GB	Position	Quantity
01-13224-1	BODY F9B-	1	1
01-42422-3	ENDCOVER F8B/F9B- (O-RING)	2	1
01-35137	SHAFT F8/F9B-3000	3	1
01-43137	CAM 1/1 F9B-	4	1
08-802B	IMPELLER	5	1
0.2172.142	O-RING 90.00X2.5 NBR70	6	1
01-42426	PIN	7	1
01-42423	WEARPLATE F8/F80/F9/F95B-	8	1
01-13020	PEDESTAL F8/F9B-3000/-5000	9	1
01-42747	SPACER F8/F9	10	1
0.2234.337	LIP SEAL 25X62X10 BA	11	1
0.2230.319	V-GASKET V 25A NBR70	12	1
0.2247.051	MECH.SEAL COMPL 1" 106BT2C1	13	1
0.3431.780	BALL BEARING 6305-2RS1	14	2
0.0371.062	RETAIN. RING BORE D62 DIN472 SPRST	15	1
0.0370.525	EXT. CIRCLIP D25 DIN471 ST	16	2
0.0502.231	KEY 8X7-28 DIN6885A C45K	17	1
01-46794-02	SCREW 1/4"-20UNCX10 AL.BRONZE	19	1
0.0144.200	BOLT 1/4"-20UNCX1/2" SS1943 A4	20	5
0.0144.002	BOLT 5/16"-18UNCX20 SS1943	21	4
0.0353.309	SPRINGWASH D8.2 DIN127 STZN	22	4

The product, i.e. concept, design and construction, is the property of SPX Johnson Pump Marine AB

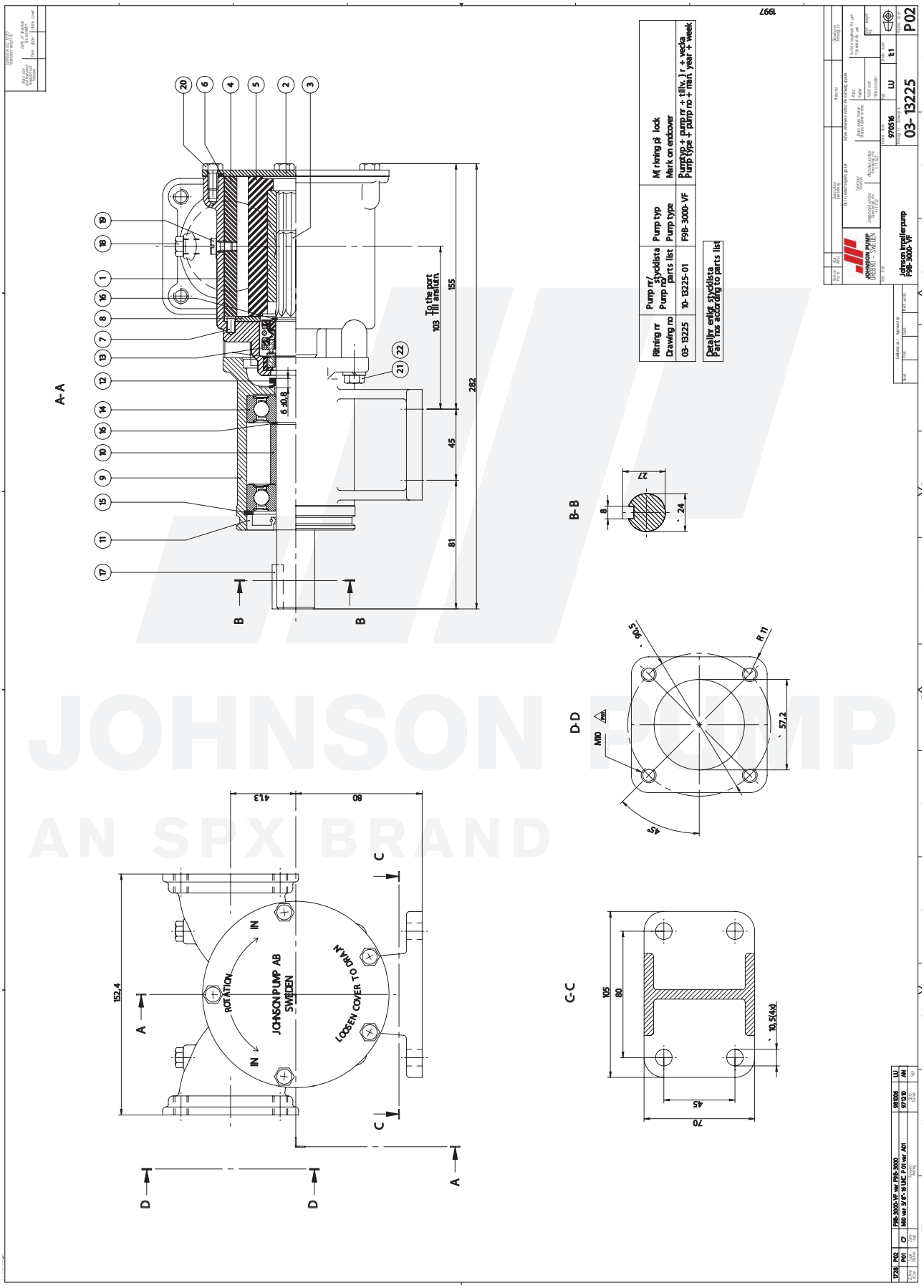

JOHNSON PUMP
AN SPX BRAND

Multipurpose

F95B-3000 Impeller pump
Art. No. 10-13121-01

Part no.	Description GB	Position	Quantity
01-13119-2	BODY F95B-9	1	1
01-13131-1	BEARING HOUSING F95B-	2	1
01-24426-1	CONNECTION F95B-3000/-5000	3	2
01-35694	SHAFT F95B-	4	1
01-35284-2	ENDCOVER F9B/F95B O-RING	5	1
0.2172.142	O-RING 90.00X2.5 NBR70	6	1
01-42423	WEARPLATE F8/F80/F9/F95B-	7	1
0.2247.018	MECH.SEAL CPL FA35.60.16	8	1
08-820B	IMPELLER F95B-	9	1
01-46323	WASHER F95B-	10	1
01-46322	WASHER F95B-	11	1
01-35744	CAM 1/1 F95B-	12	1
0.3431.743	BALL BEARING 6307 2 RS1 ST	13	1
0.3431.043	BALL BEARING 6306 2 RS C3 ST	14	1
01-46319	GASKET F95B-	15	2
0.0370.535	EXT. CIRCLIP D35 DIN471 BRONZE	16	1
0.0371.080	RETAIN. RING BORE D80 DIN472 SPRST	17	1
01-46794-09	SCREW M8X25 AL.BRONZE	18	2
0.0138.134	TAP BOLT M6X12 DIN933 A2	19	5
0.0141.917	TAP BOLT M8X22 DIN934 8.8ZP	20	8
0.0141.922	TAP BOLT M10X25 DIN933 8.8ZP	21	4
0.0353.111	SPRING WASHER D10.2 DIN127B A2	22	4
0.2230.322	V-GASKET V 35A NBR70	23	1
01-42426	PIN	24	1
0.2233.008	OIL SEAL 25X40X7 BAUSL NBR	25	1
0.0502.231	KEY 8X7-28 DIN6885A C45K	26	1

The product, i.e. concept, design and construction, is the property of SPX Johnson Pump Marine AB

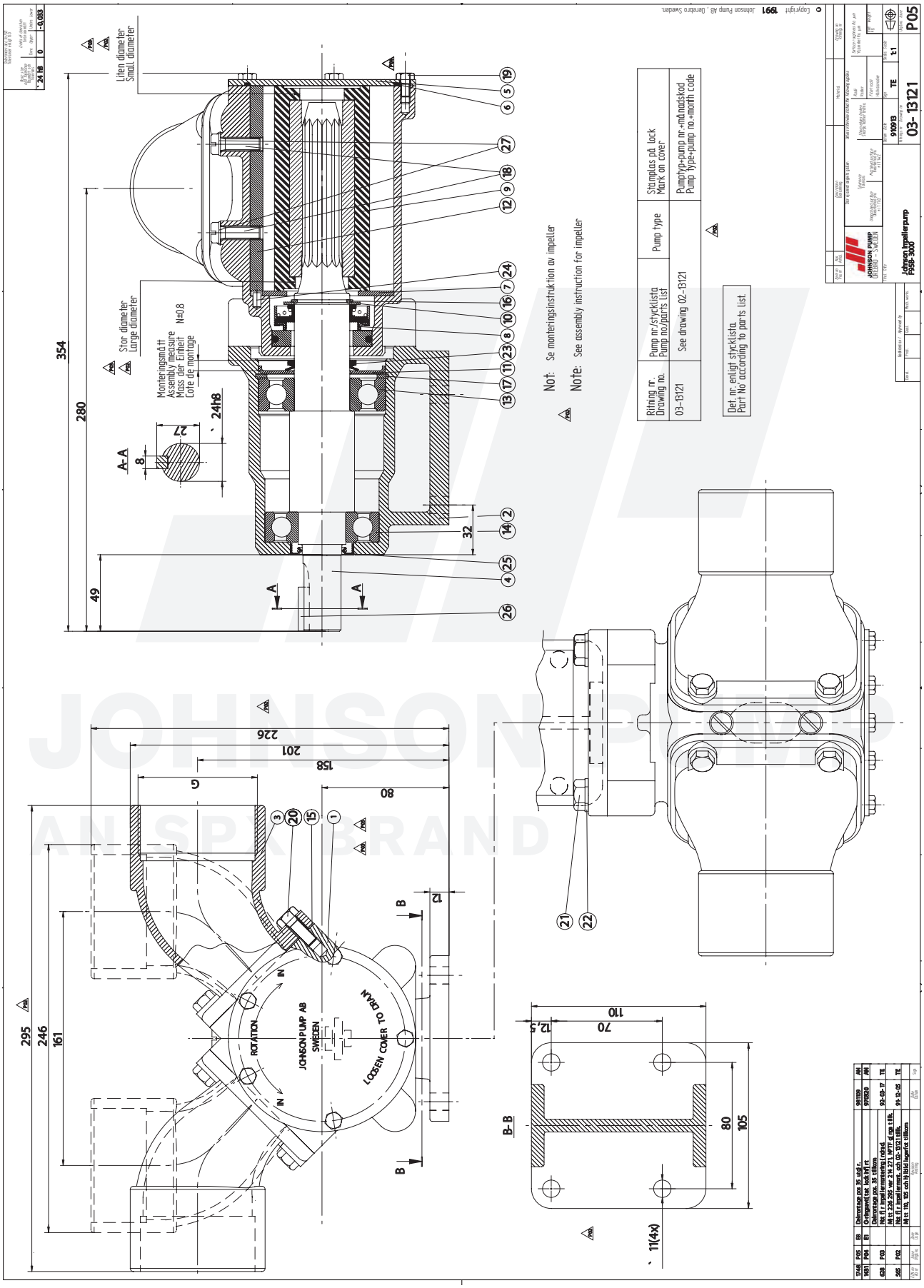

JOHNSON PUMPS
AN SPX BRAND

Multipurpose

Multipurpose

JOHNSON PUMP
AN SPX BRAND

Performance curves

Cooling capacity

The required output of the cooling pump – raw water as well as fresh water handling – is related to:

- engine size and type (gasoline or diesel)
- type of cooling system (size of heat exchanger)
- water cooled engine oil, reverse gear, exhaust system

Contact your local dealer for more information, or for indirect cooling systems your supplier of heat exchangers.

Performance curves

Pump	Page
F35B	425
F4B	425
F4B High speed	426
F5B	426
F5B High speed	427
F6B High speed	427
F7B	428
F75B	428
F8B	429
F9B (impeller 08-802B)	429
F9B (impeller 08-814B)	430
F95B	430

JOHNSON PUMP

AN SPX BRAND

All performance curves are based on water at 20°C (68°F) and full cam.

F35B Standard Pump

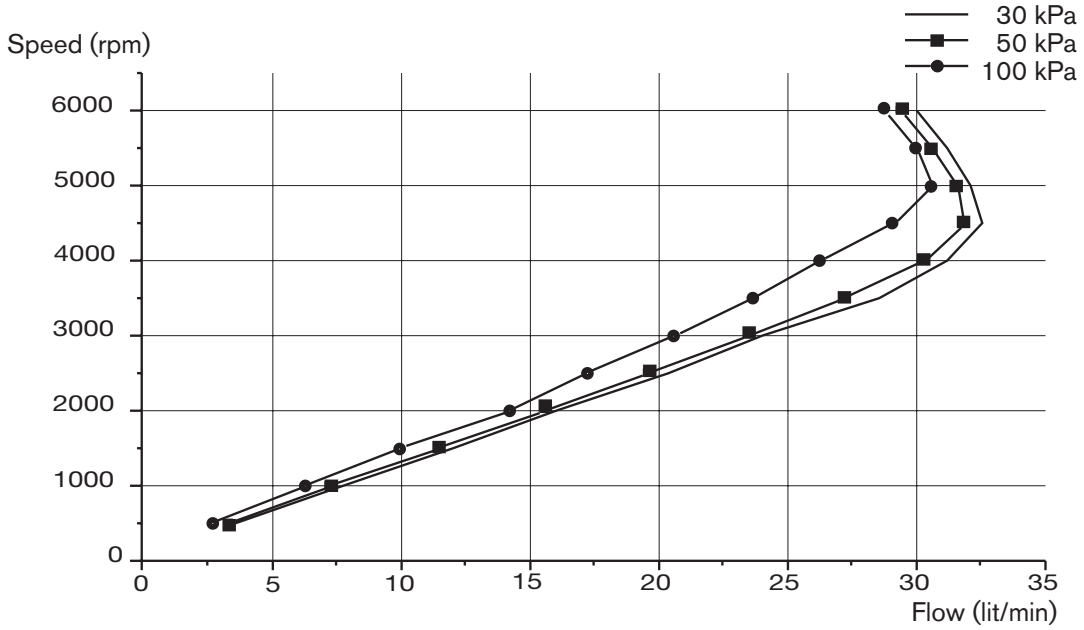

F4B Standard Pump

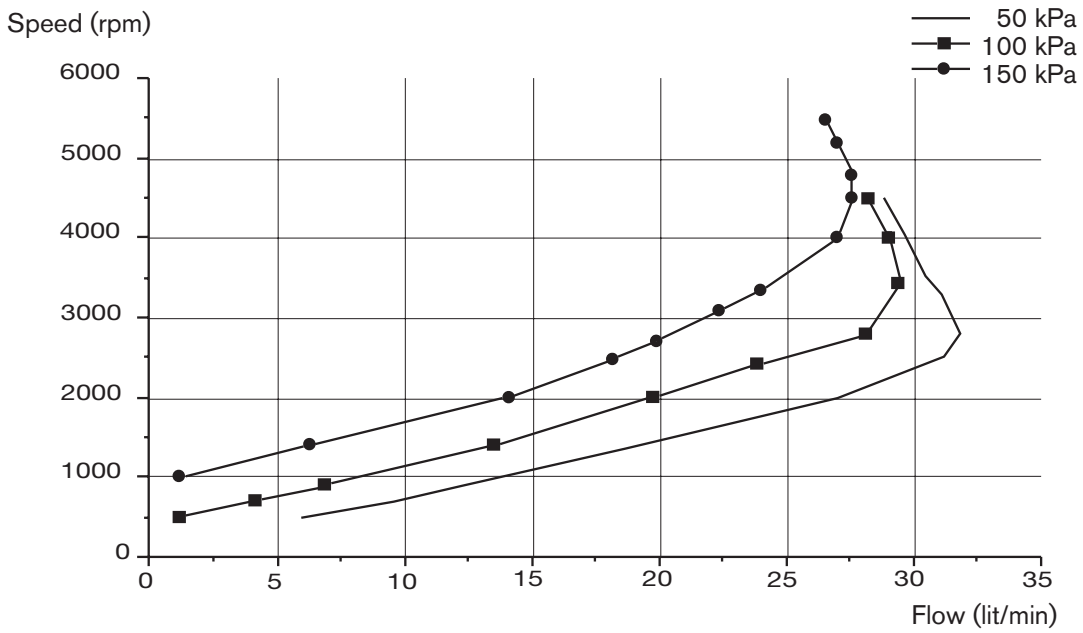

All performance curves are based on water at 20°C (68°F) and full cam.

F4B High Speed Standard Pump

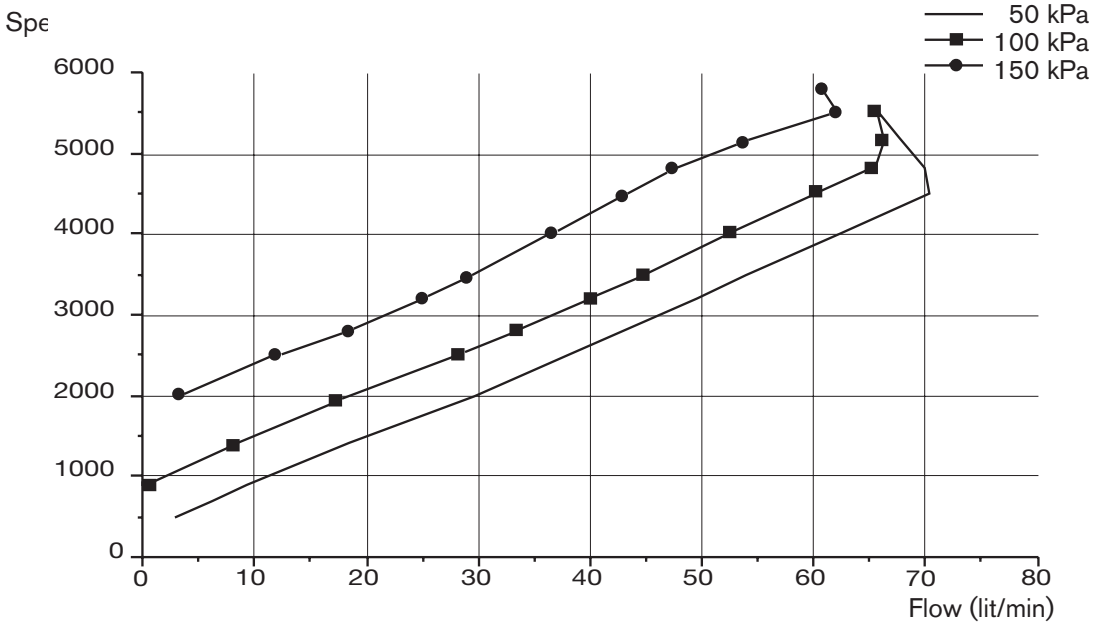

F5B Standard Pump

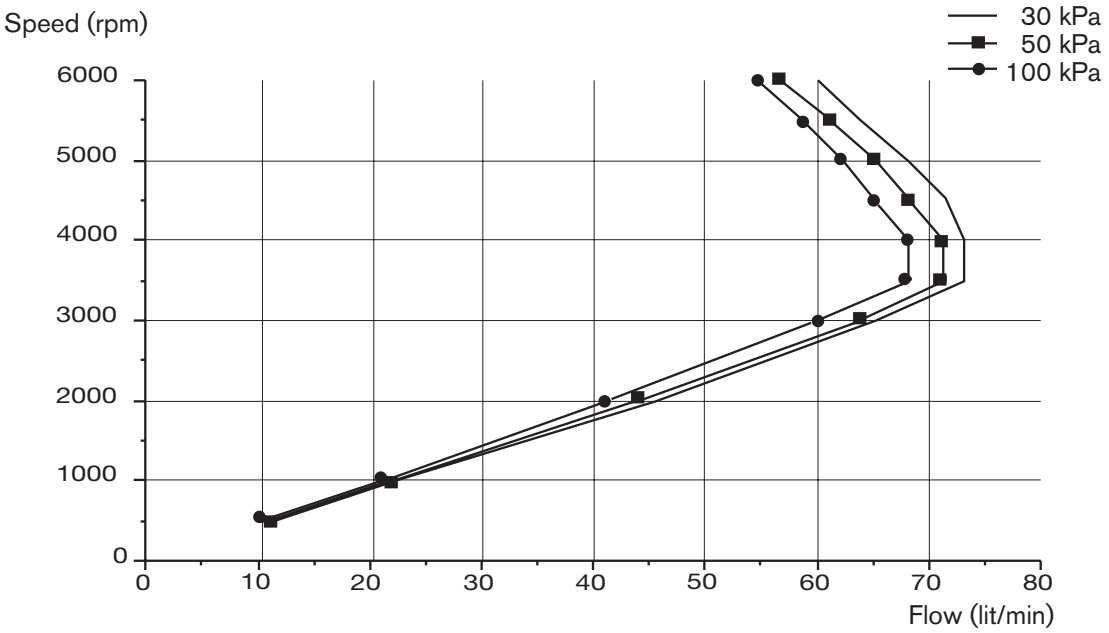

All performance curves are based on water at 20°C (68°F) and full cam.

F5B High Speed Standard Pump

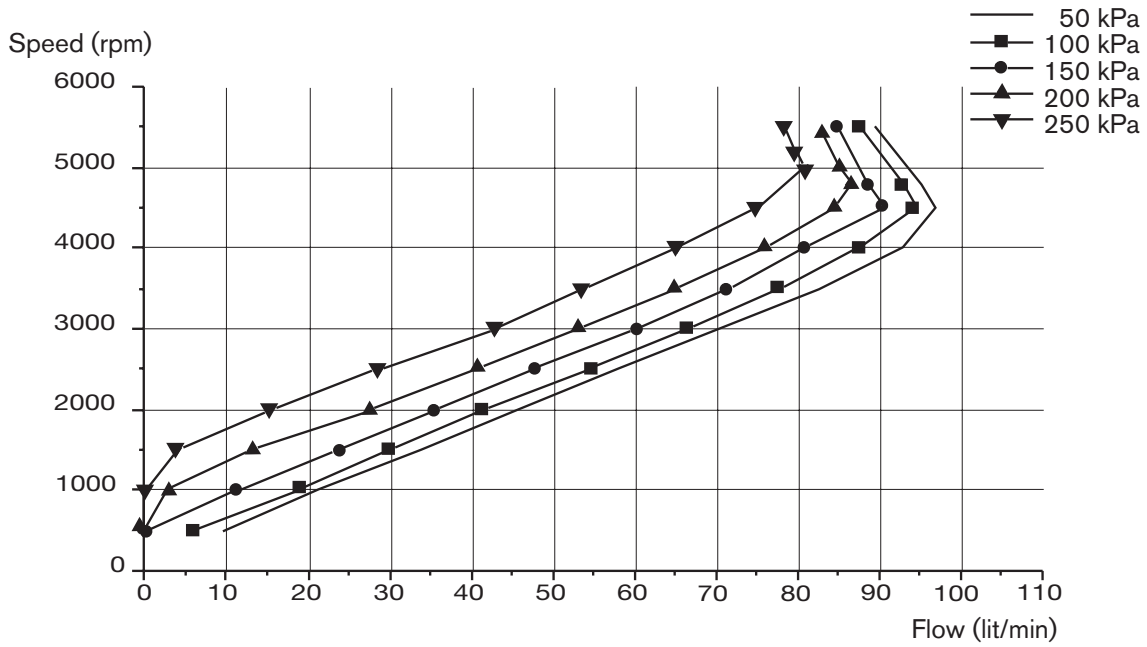

F6B High Speed Standard Pump

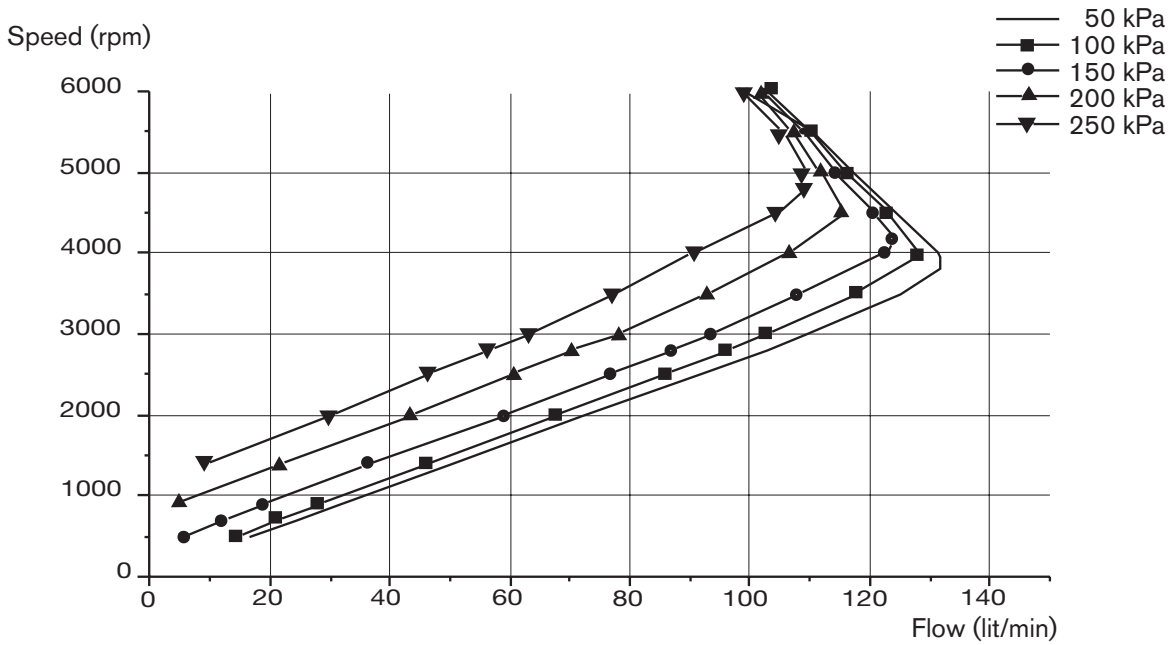

All performance curves are based on water at 20°C (68°F) and full cam.

F7B Standard Pump

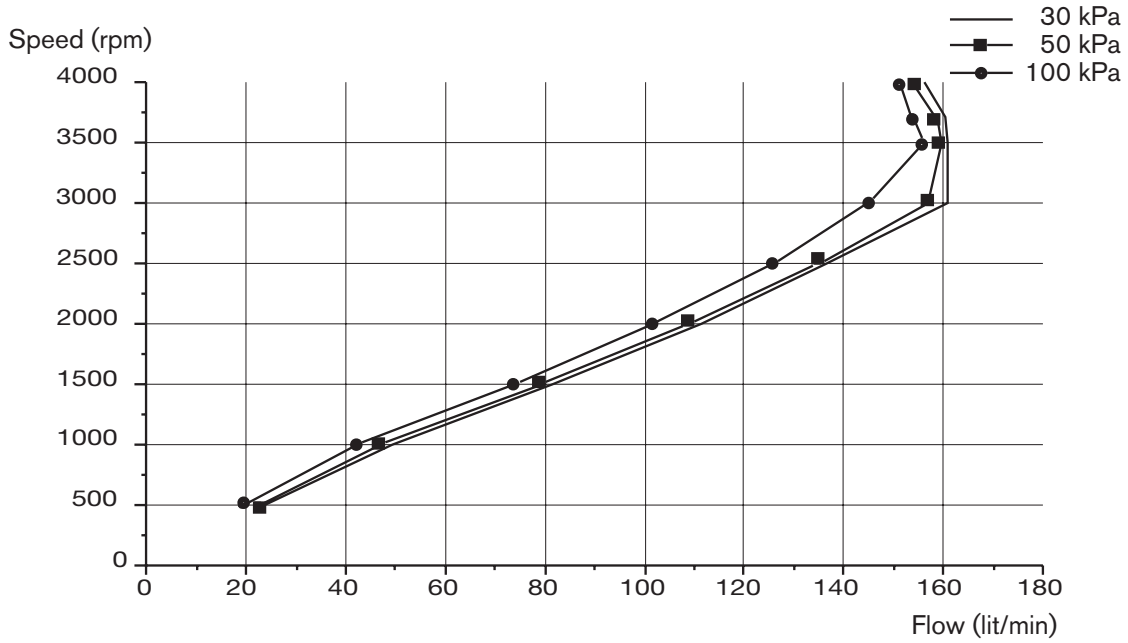

F75B Standard Pump

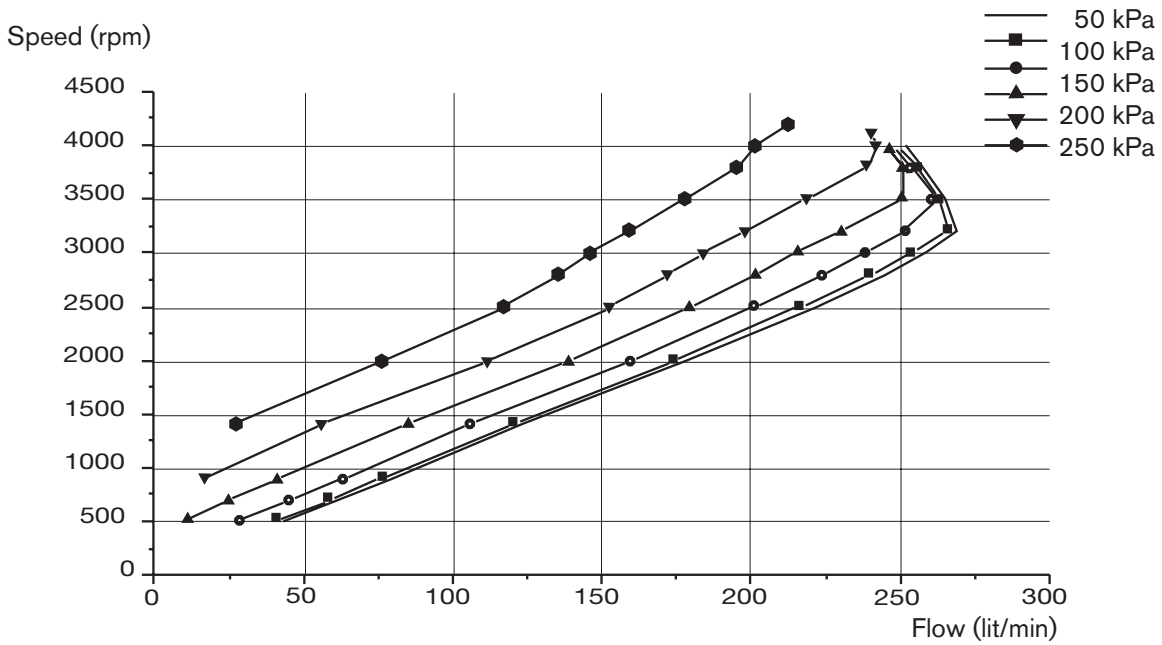

All performance curves are based on water at 20°C (68°F) and full cam.

F8B Standard Pump

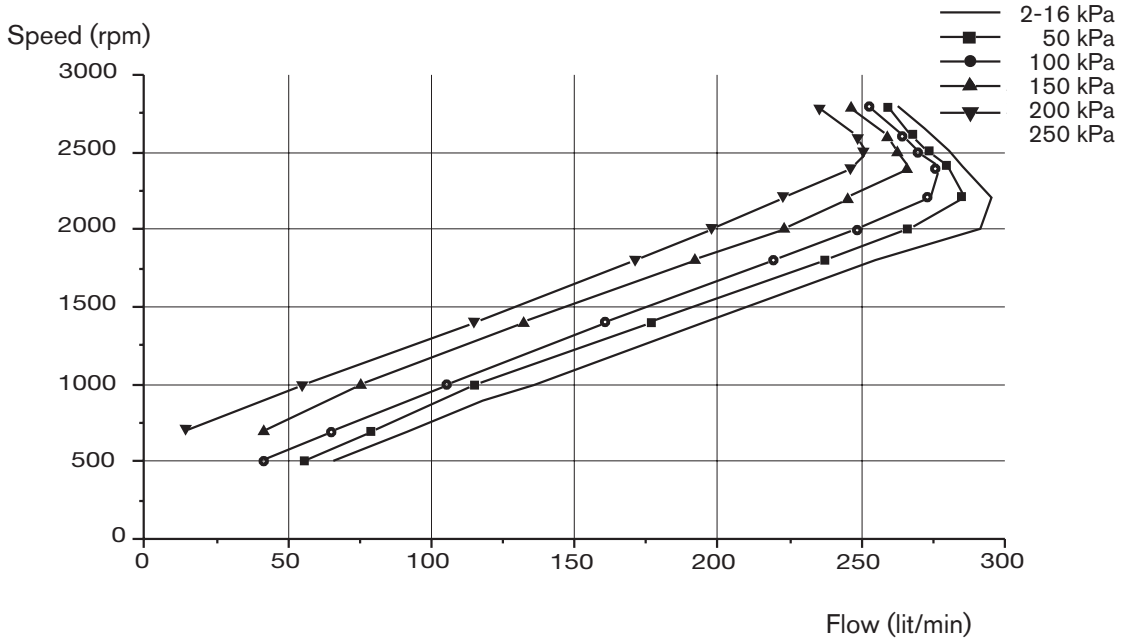

F9B Standard Pump (impeller 08-802B)

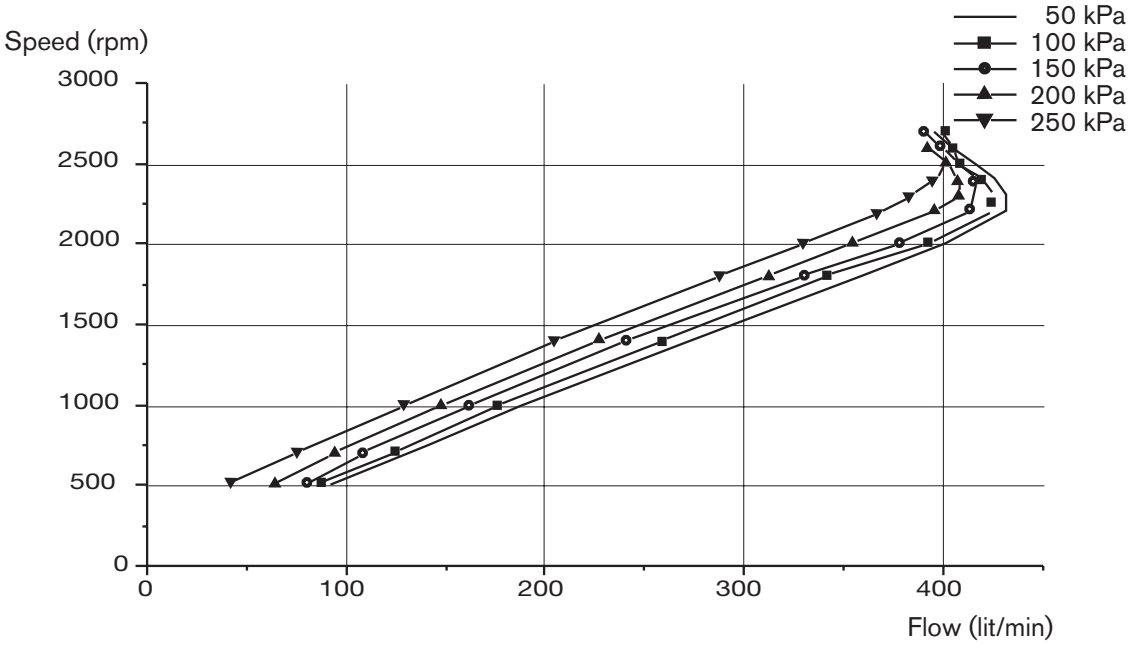

All performance curves are based on water at 20°C (68°F) and full cam.

F9B Standard Pump (impeller 08-814B)

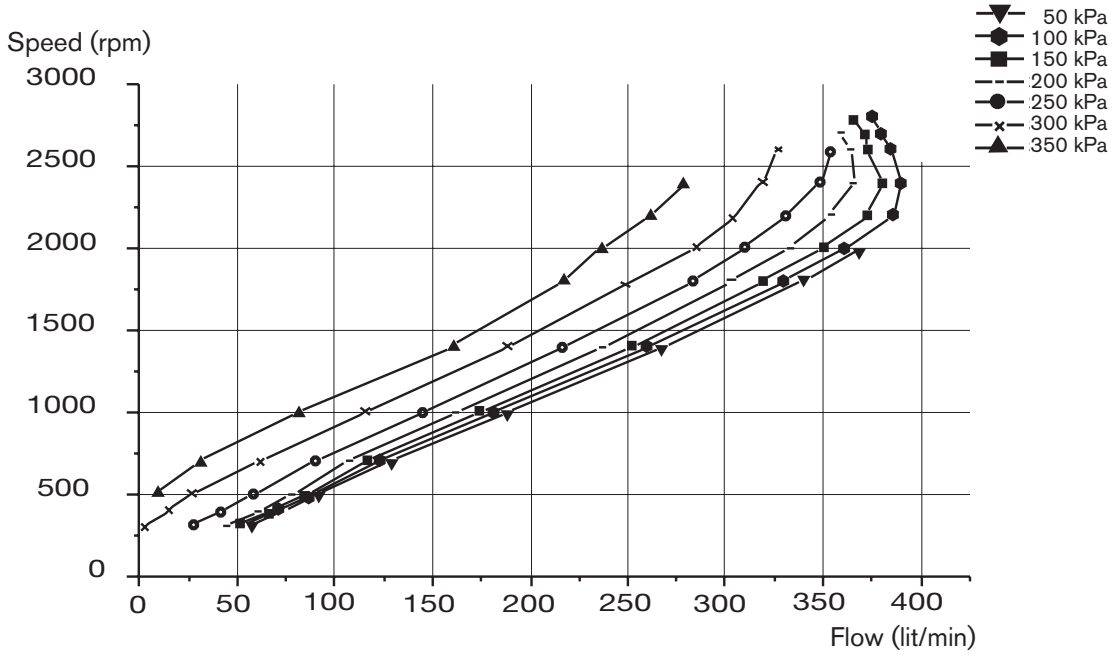

F95B Standard Pump

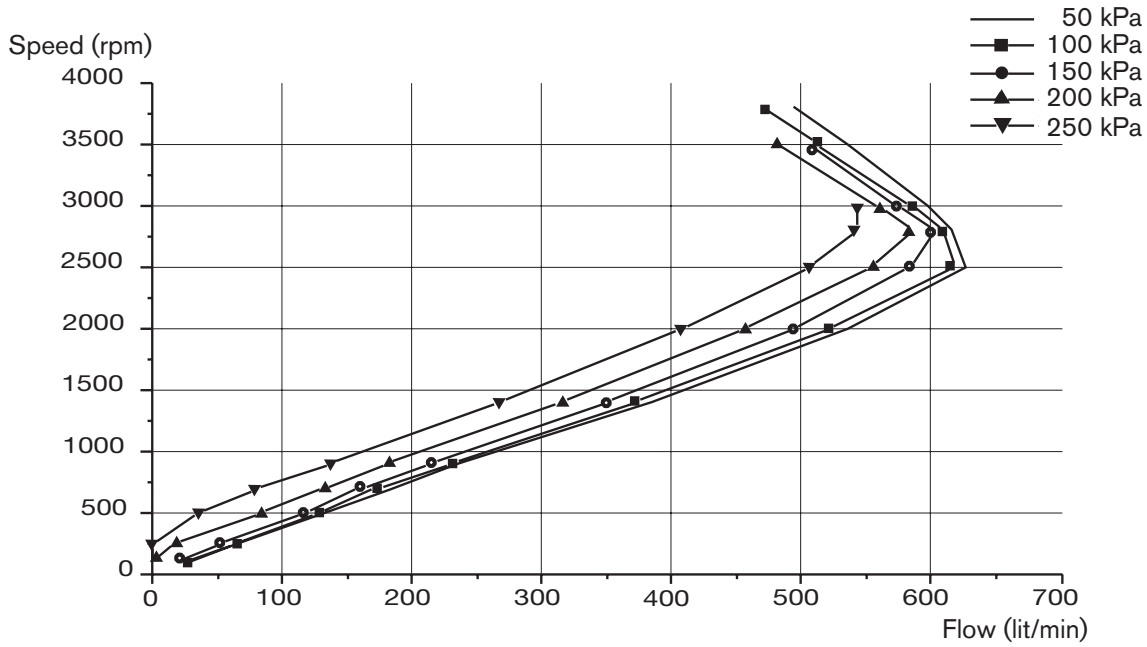

Spare parts

Impellers

Cams

Gaskets

O-rings

Endcovers

Wear plates

Service Kit and Part Reference Guide

Take good care of the cooling system

Change to a new impeller every year

The impeller is a very important security device. Its task is to pump the water through the cooling system of the engine. But remember that the impeller should be replaced every year.

And always make sure you use a Johnson Pump original impeller. This will ensure that the quality complies with the performance and dimension requirements for each pump type. Johnson Pump impellers are manufactured in strict complience with the pump specifications set by the engine manufacturers.

This is how to remove the old impeller

Remove the impeller with a slip joint plier or a Johnson Impuller.

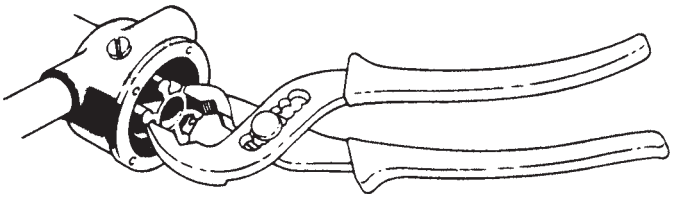

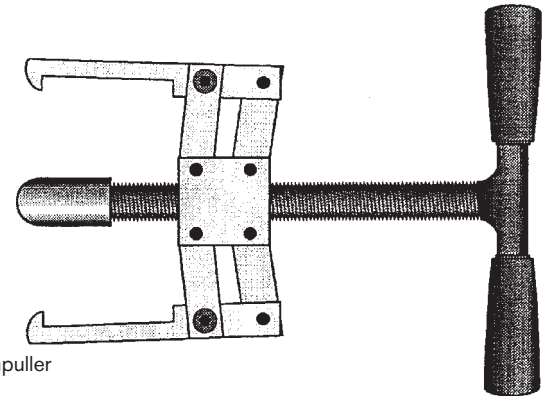

Order No.
09-950-9300 – Johnson Impuller

This is how to fit the new one

Lubricate the shaft and the inside of the pump body and endcover. Use soap, grease or oil. By doing so you avoid dry friction when you start the engine. Mount the impeller by making a pushing and twisting movement in the rotating direction.

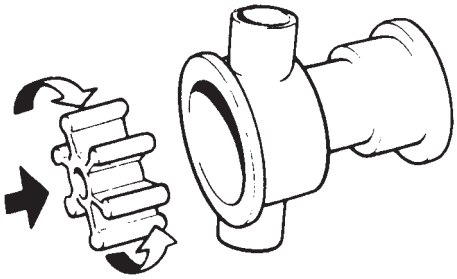

Impellers

Pump	Article number	Page
F2	09-806B	435
F3	09-1077B-9	435
F3	09-843S-9	435
F35	09-1052S-9	435
F35	09-808B	435
F4	09-1026B	436
F4	09-1026B-9	436
F4	09-810B	436
F4	09-810B-9	436
F4	09-824P	436
F5	09-1027B	437
F5	09-1027B-10	437
F5	09-1027B-9	437
F5	09-801B	437
F5	09-804B-9	437
F6	09-812B	437
F7	09-1028B	438
F7	09-1028B-9	438
F75	09-821B	438
F8	09-1029B	439
F8	09-819B	439
F8	09-819B-9	439
F9	09-802B	440
F9	09-814B	440
F95	09-820B	441

Cams

Pump	Article number	Page
F3	01-43140 (1/1)	443
F3	01-45548 (1/1)	443
F35	01-42415 (1/2)	443
F35	01-42910 (1/1)	443
F4	01-42389 (1/1)	443
F4	01-45084 (1/2)	443
F4	01-45288 (2/3)	444
F4	01-45660 (1/1)	444
F4	01-45661 (2/3)	444
F5	01-42397 (1/1)	444
F5	01-45014 (2/3) M5	444
F5	01-45199	444
F5	01-45976 (2/3) Nr 10-32 UNF	444
F5	01-45329 (1/1)	445
F5	01-45656 (1/2)	445
F5	01-46706	445
F6	01-45670 (1/1)	445
F6	01-46502 (1/1)	446
F7	01-42442 (2/3)	446
F7	01-42584 (1/2)	446
F7	01-42679 (1/1)	446
F7	01-46899 (1/1)	447
F7	01-46899-1 (2/3)	447
F75	01-46146 (1/1)	448
F8	01-42680 (1/1)	448
F8	01-42425 (2/3)	449
F8	01-42755 (1/2)	449
F9	01-43135 (2/3)	450
F9	01-43138 (1/2)	450
F9	01-43137 (1/1)	451
F95	01-35744 (1/1)	451

Gaskets

Pump	Article number	Page
F3	01-43142	453
F35	01-42417	453
F35	01-42911	453
F35	01-43240	453
F4	01-42391	453
F4	01-45284	453
F5	01-42401	454
F5	01-42636	454
F5	01-45020	454
F5	01-46540	454
F5/F6	01-45315	455
F7	01-42445	455
F75	01-46286	456
F8	01-45354	456
F8/F9	01-42424	457

Endcovers

Pump	Article number	Page
F35	01-42414	463
F35	01-43141	463
F35	01-43239	463
F35	01-46739-2 (stainless)	463
F4	01-42388-1/-2	464
F4	01-45282	464
F4/F5	01-42398	464
F4/F5	01-46007	464
F4/F5	01-46007-2 (O-ring)	464
F4/F5	01-46007-3 (stainless)	464
F5/F6	01-45312-1	465
F5/F6	01-46556	465
F5/F6	01-46535	466
F7	01-42441	466
F7	01-46431 (stainless)	466
F7	01-46648-1 (O-ring)	466
F75	01-46285	467
F8/F9	01-42422-1 (F8/F9)	468
F9	01-35773 F9 (stainless)	468
F95B	01-35284-2 F95B (O-ring)	468
F9	01-45961	469

Wearplates

Pump	Article number	Page
F35	01-45087	471
F35	01-46676 (stainless)	471
F4	01-46737	471
F4	01-46737-2 (stainless)	471
F5	01-42399-2 (stainless)	471
F5	01-42399	471
F5	01-46532	471
F5	01-46532-2 (stainless)	471
F6	01-46969 (stainless)	471
F7/F75	01-42443	472
F7/F75	01-46647 (stainless)	472
F7/F75	01-46798-1	472
F7/F75	01-46798-2 (stainless)	472
F8/F9/F95	01-42423	472
F8/F9/F95	01-46538 (stainless)	472

Service Kit and Part Reference Guide

473

JOHNSON PUMP

AN SPX BRAND

Impellers

F2

Impeller article number 09-1077B-9
Nitrile (oil resistant)

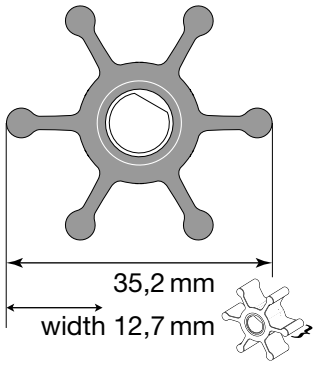

F3

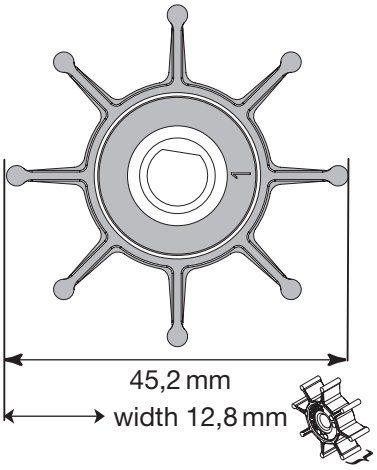

Impeller article number 09-843S-9
Nitrile (oil resistant)
for F3B-19

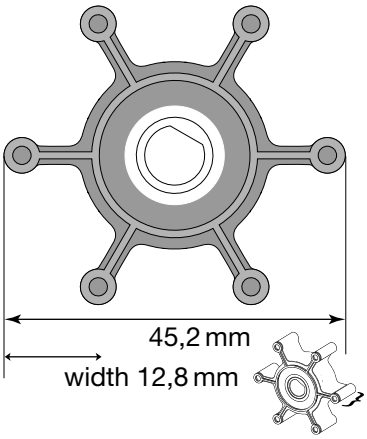

Impeller article number 09-1052S-9
Nitrile (oil resistant)
for TA3P-10

F35

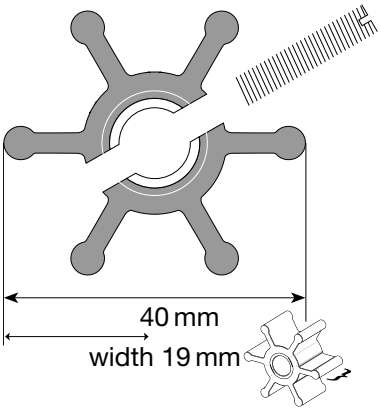

Impeller article number 09-806B
Neoprene (for cooling)
replaces Jabsco 4528-0001 Europe & USA
inner diameter 9,5 mm

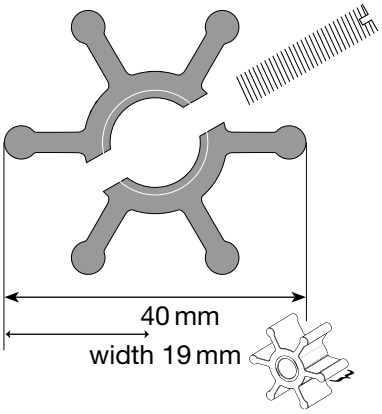

Impeller article number 09-808B
Neoprene (for cooling)
replaces Jabsco 22405-0001 Europe & USA
inner diameter 12 mm

F4

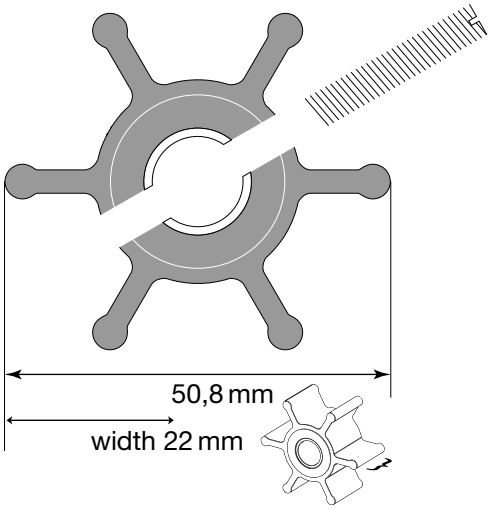

Impeller article number 09-810B
Neoprene (for cooling)
replaces Jabsco 18653-0001 Europe & USA
Impeller article number 09-810B-9
Nitrile (oil resistant)
inner diameter 12 mm

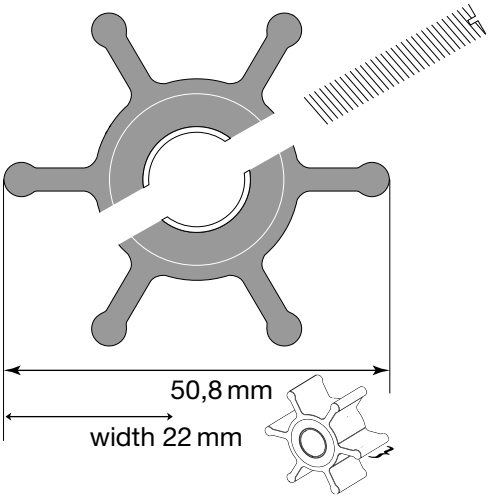

Impeller article number 09-1026B
Neoprene (for cooling)
replaces Jabsco 673-0001 Europe & USA
Impeller article number 09-1026B-9
Nitrile (oil resistant)
replaces Jabsco 673-0003 Europe&USA
inner diameter 12,7 mm

F4

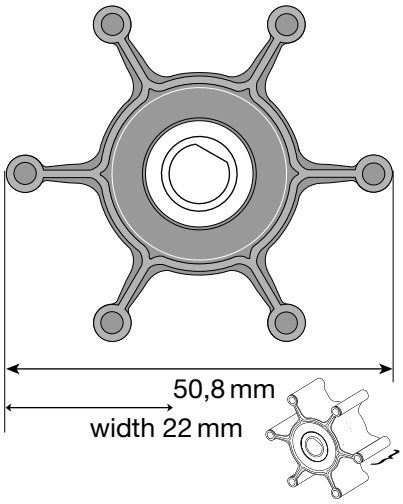

Impeller article number 09-824P
Nitrile (oil resistant)
replaces Jabsco 6303-0003 Europe & USA

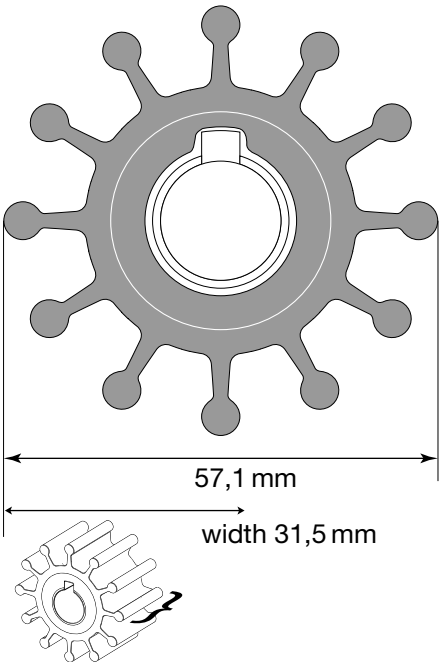

Impeller article number 09-801B
Neoprene (for cooling)
replaces Jabsco 4568-0001 Europe & USA
inner diameter 15,9 mm/key

F5

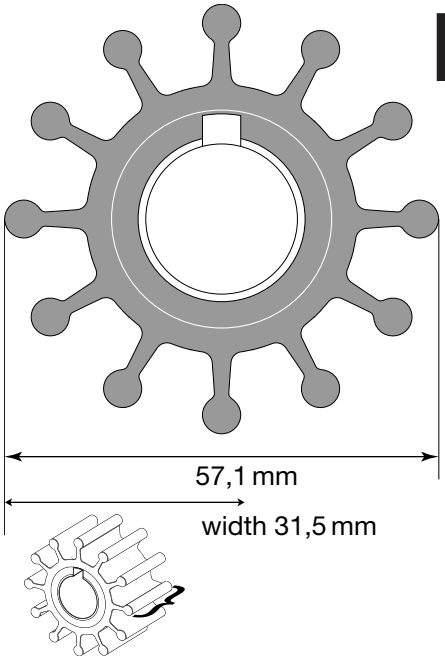

Impeller article number 09-804B-9
Nitrile (oil resistant)
inner diameter 20 mm/key

F5

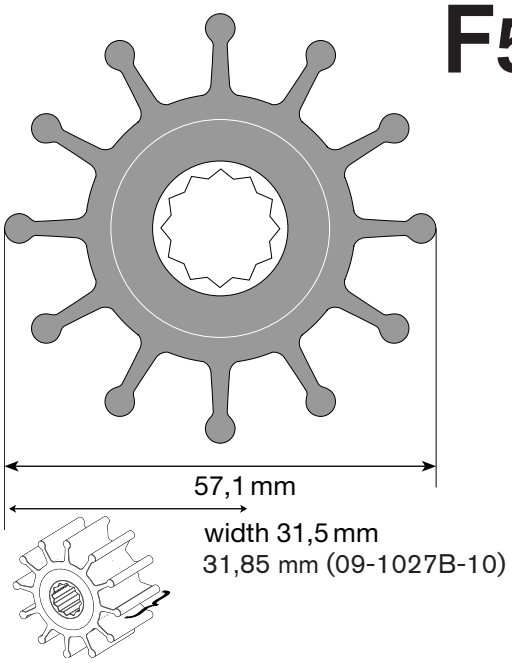

Impeller article number 09-1027B
Neoprene (for cooling)
replaces Jabsco 1210-0001 Europe & USA
Impeller article number 09-1027B-9
Nitrile (oil resistant)
replaces Jabsco 1210-0003 Europe&USA
Impeller article number 09-1027B-10
MC97

F6

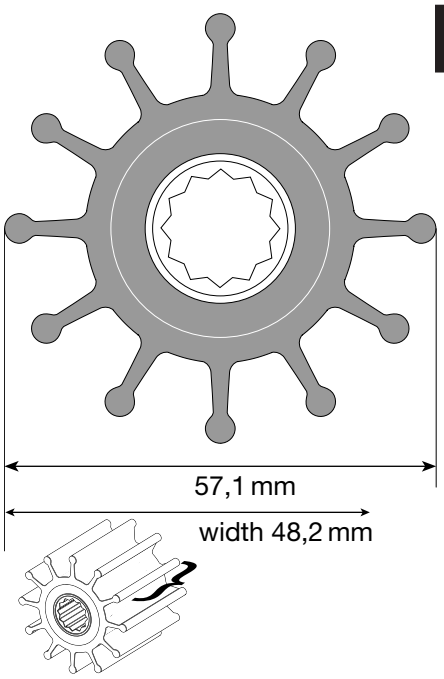

Impeller article number 09-812B
Neoprene (for cooling)
replaces Jabsco 13554-0001 USA

F7

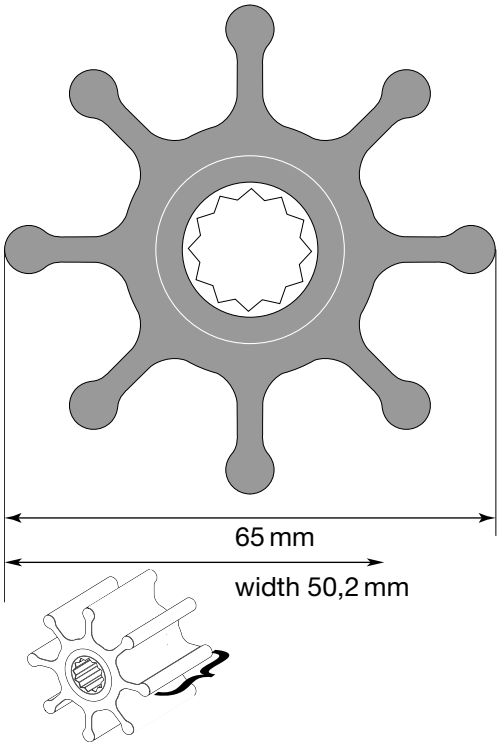

Impeller article number 09-1028B
Neoprene (for cooling)
replaces Jabsco 17937-0001 Europe & USA
Impeller article number 09-1028B-9
Nitrile (oil resistant)
replaces Jabsco 17937-0003 Europe&USA

F75

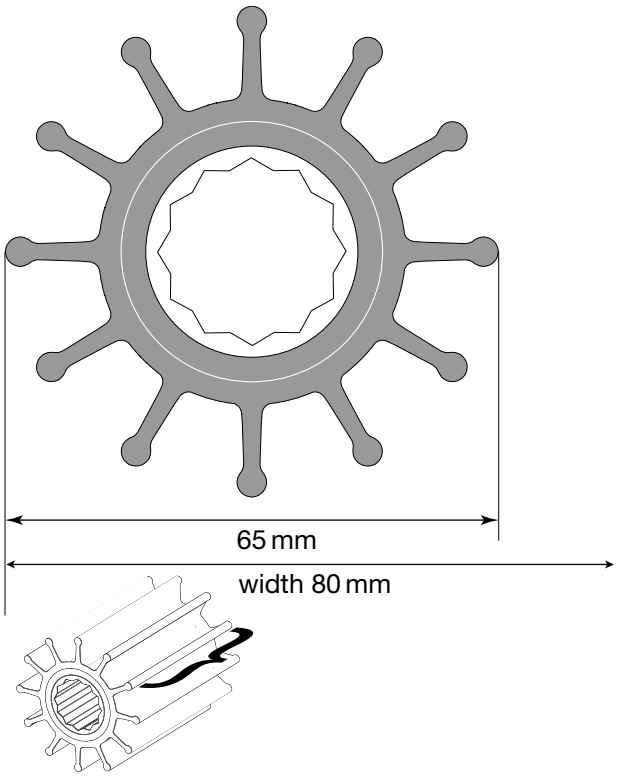

Impeller article number 09-821B
Neoprene (for cooling)

F8

Impeller article number 09-819B
Neoprene (for cooling)
replaces Jabsco 836-0001 Europe &
17935-0001 USA
Impeller article number 09-819B-9
Nitrile (oil resistant)
replaces Jabsco 836-0003 Europe&
17935-0003 USA

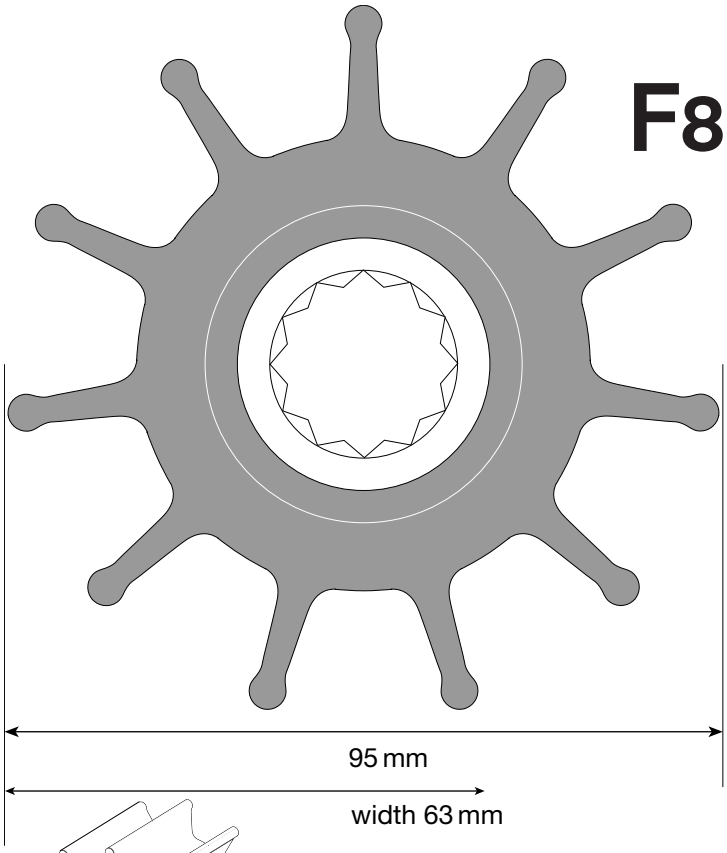

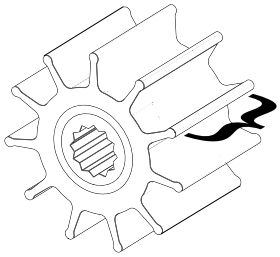

Impeller article number 09-1029B
Neoprene (for cooling)
replaces Jabsco 836-0001 Europe &
17935-001 USA

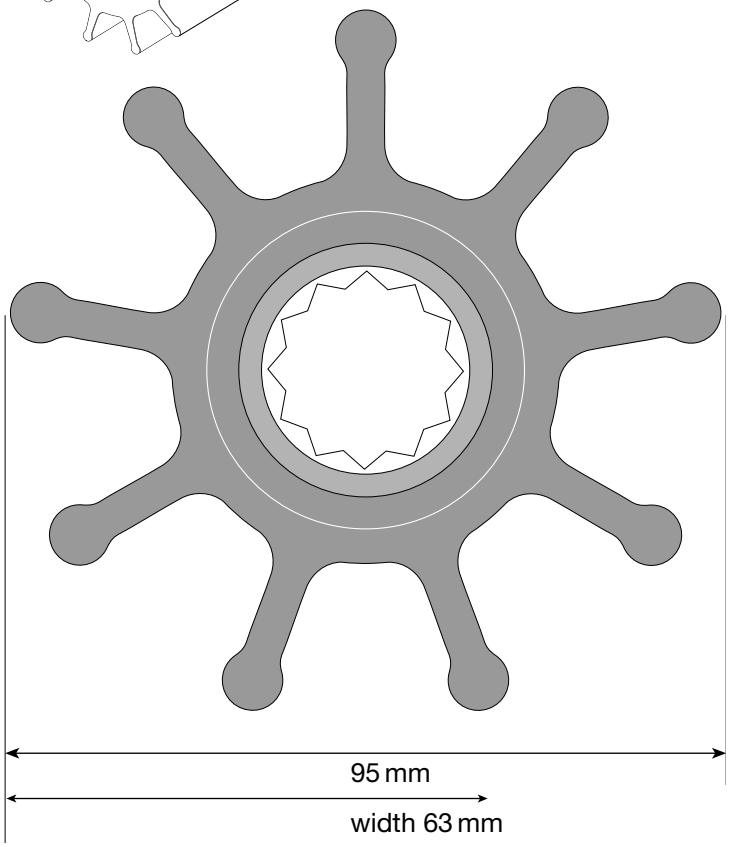

F9

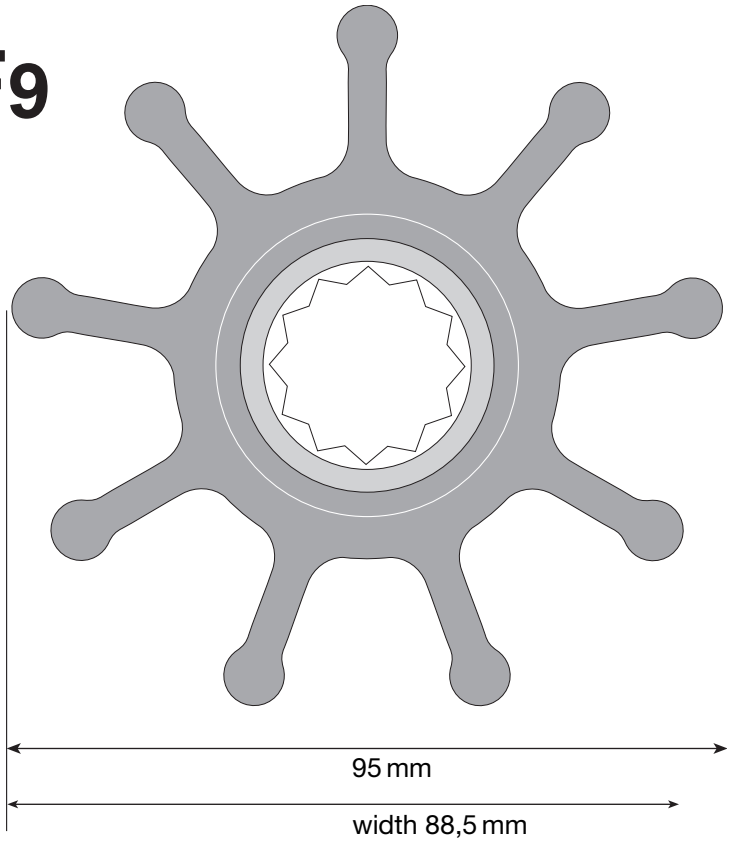

Impeller article number 09-802B
Neoprene (for cooling)
replaces Jabsco 6760-0001 Europe & USA

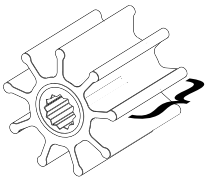

F9

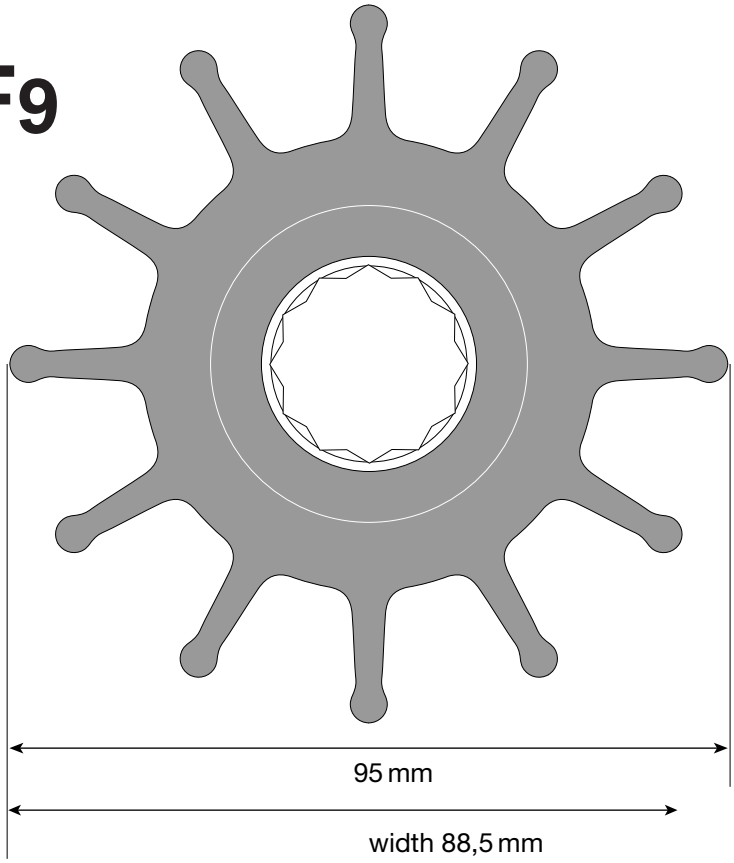

Impeller article number 09-814B
Neoprene (for cooling)
replaces Jabsco 21676-0001 Europe & 17936-0001 USA

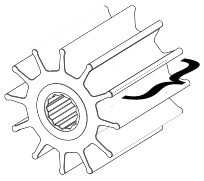

F95

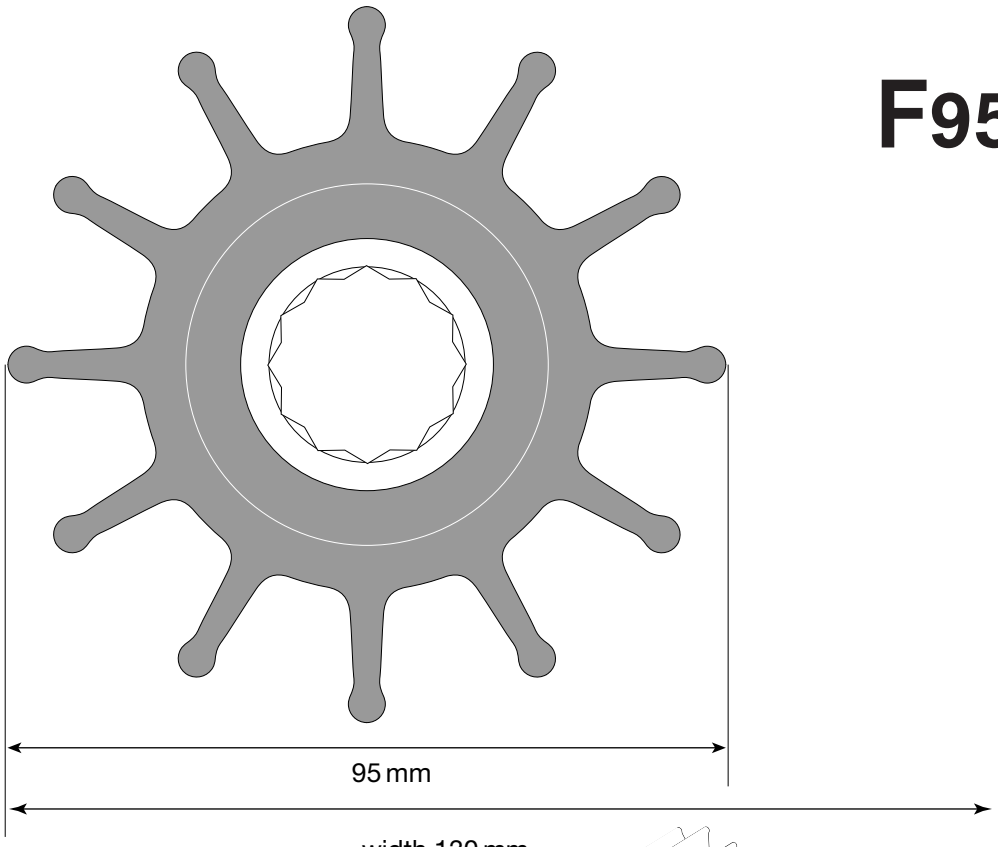

Impeller article number 09-820B
Neoprene (for cooling)

Cams

F3

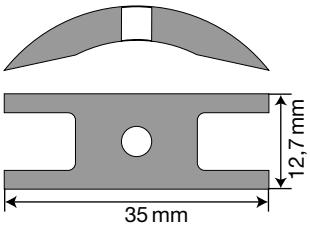

Cam article number 01-43140 (1/1)
Screw article number 0.0279.500 (05-04-162)
Washer article number 01-46790-01 (05-01-120)

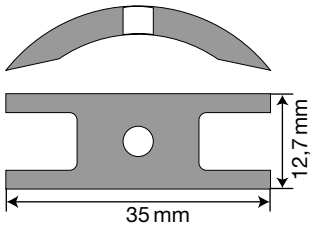

Cam article number 01-45548 (1/1)
Screw article number 0.0279.500 (05-04-162)
Washer article number 01-46790-01 (05-01-120)

F35

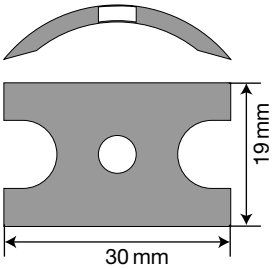

Cam article number 01-42415 (1/2)
replaces Jabsco 29303-01
Screw article number 01-46794-10 (05-04-553)
replaces Jabsco SP1002-01
Washer article number 01-46790-01 (05-01-120)

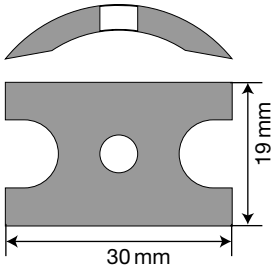

Cam article number 01-42910 (1/1)
replaces Jabsco 29303
Screw article number 01-46794-07 (05-04-114)
replaces Jabsco SP1002-09
Washer article number 01-46790-01 (05-01-120)

F4

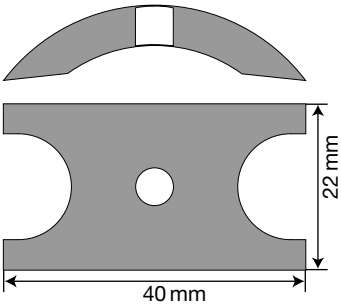

Cam article number 01-42389 (1/1)
replaces Jabsco 10818
Screw article number 01-46794-04 (05-04-115)
replaces Jabsco SP1002-02
Washer article number 01-46790-01 (05-01-120)

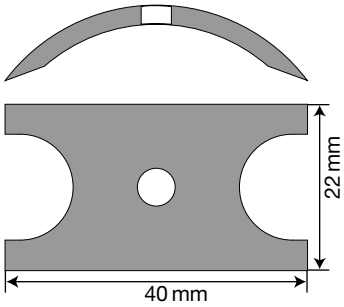

Cam article number 01-45084 (1/2)
replaces Jabsco 2441
Screw article number 0.0279.501 (05-04-163)
Washer article number 01-46790-01 (05-01-120)

F4

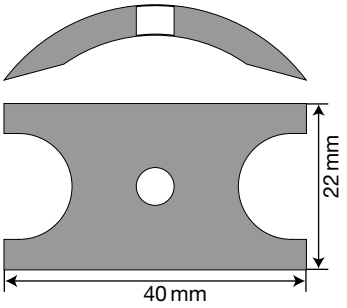

Cam article number 01-45288 (2/3)
replaces Jabsco 2907-0001
Screw article number 01-46794-03 (05-04-114)
replaces Jabsco SP1002-09
Washer article number 01-46790-01 (05-01-120)

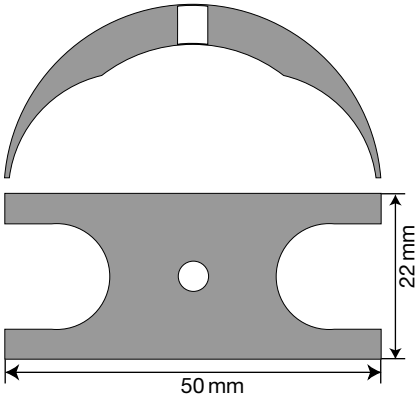

Cam article number 01-45660 (1/1)
Screw article number 0.0279.501 (05-04-163)
Washer article number 01-46790-01 (05-01-120)

F4

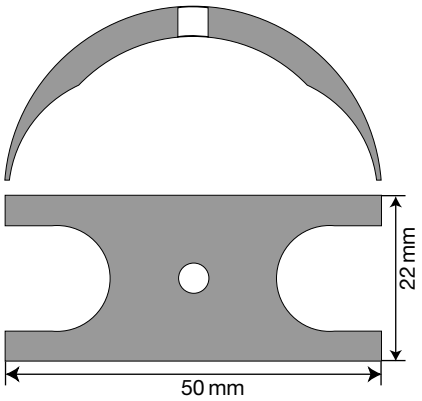

Cam article number 01-45661 (2/3)
Screw article number 0.0279.501 (05-04-163)
Washer article number 01-46790-01 (05-01-120)

F5

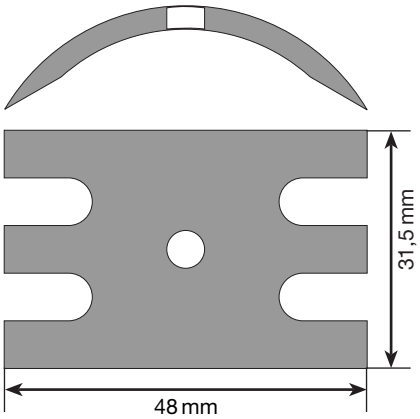

Cam article number 01-45014 (2/3) M5
replaces Jabsco 10338
Screw article number 0.0279.032 (05-04-175)
replaces Jabsco SP1003-09
Cam article number 01-45976 (2/3) Nr 10-32 UNF
Screw article number 01-46794-05

F5

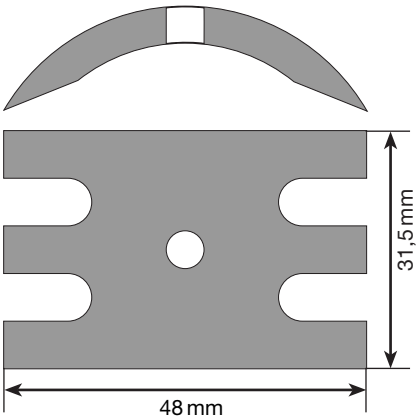

Cam article number 01-42397 (1/1)
replaces Jabsco 490
Screw article number 01-46794-05 (05-04-117)
replaces Jabsco SP1003-09

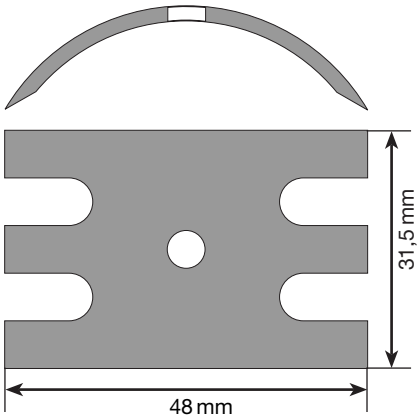

Cam article number 01-45199
Screw article number 0.0279.032 (05-04-175)

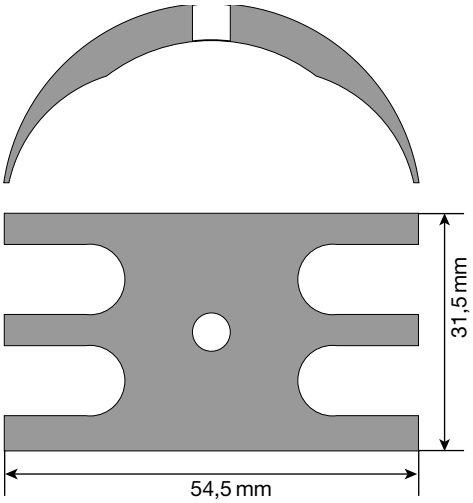

Cam article number 01-45329 (1/1)
Screw article number 0.0279.033 (05-04-174)

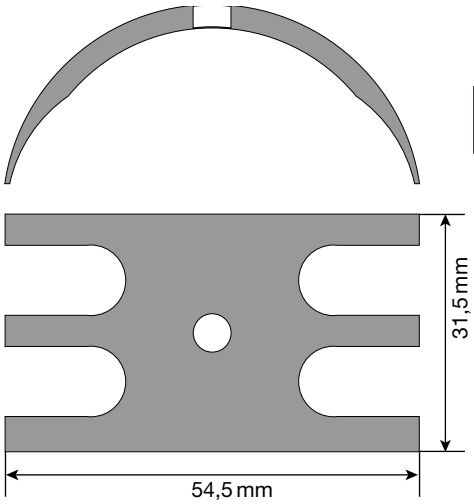

Cam article number 01-45656 (1/2)
Screw article number 0.0279.032 (05-04-175)

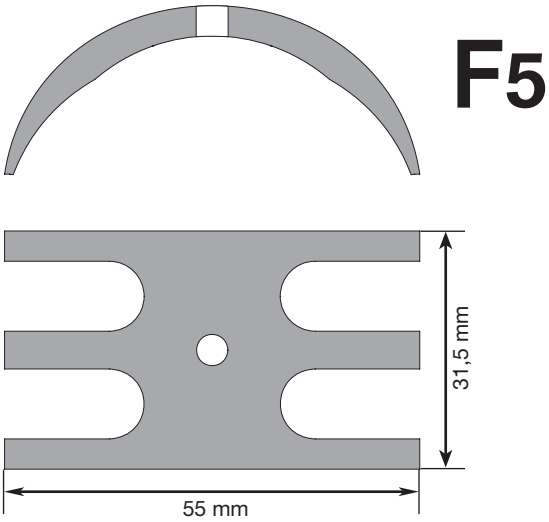

Cam article number 01-46706
Screw article number 0.0141.052

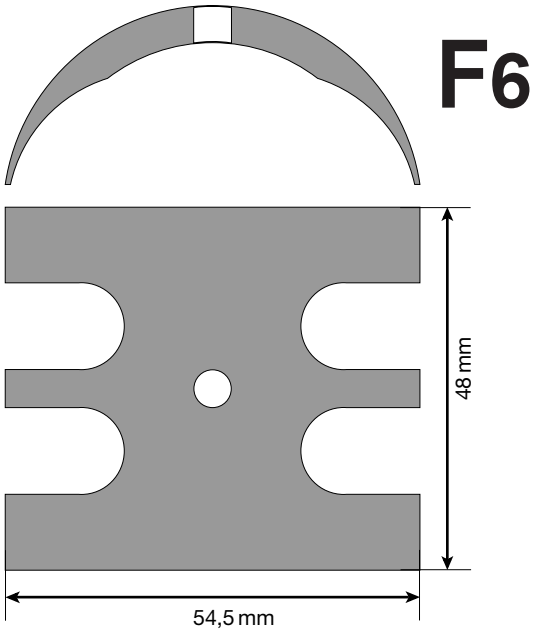

Cam article number 01-45670 (1/1)
Screw article number 0.0279.033 (05-04-174)

F6

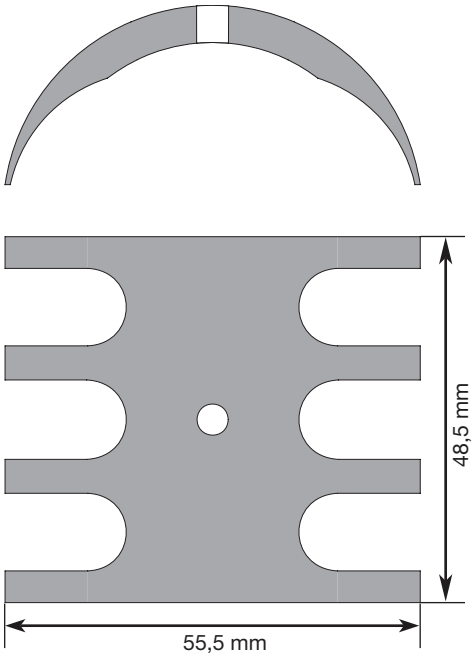

Cam article number 01-46502 (1/1)
Screw article number 0.0279.033

F7

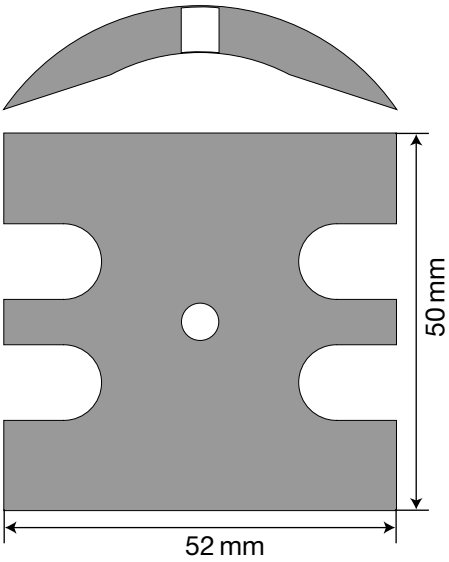

Cam article number 01-42679 (1/1)
replaces Jabsco 934
Screw article number 01-46794-01 (05-04-107)

F7

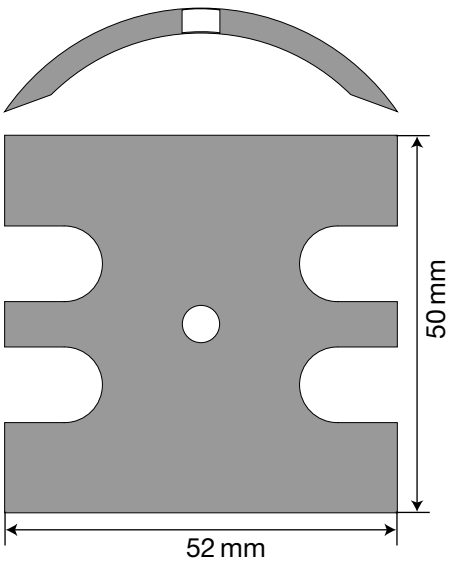

Cam article number 01-42584 (1/2)
replaces Jabsco 2431
Screw article number 01-46794-06 (05-04-125)

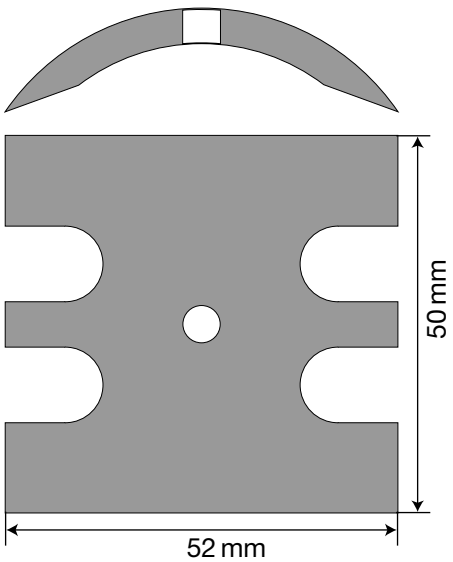

Cam article number 01-42442 (2/3)
replaces Jabsco 3255
Screw article number 01-46794-07 (05-04-144)
replaces Jabsco SP1004-11

F7

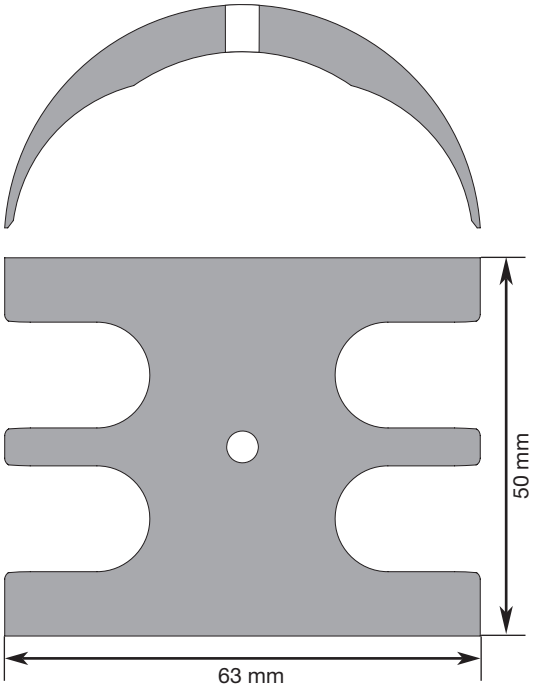

Cam article number 01-46899 (1/1)
Screw article number 0.0279.035

F7

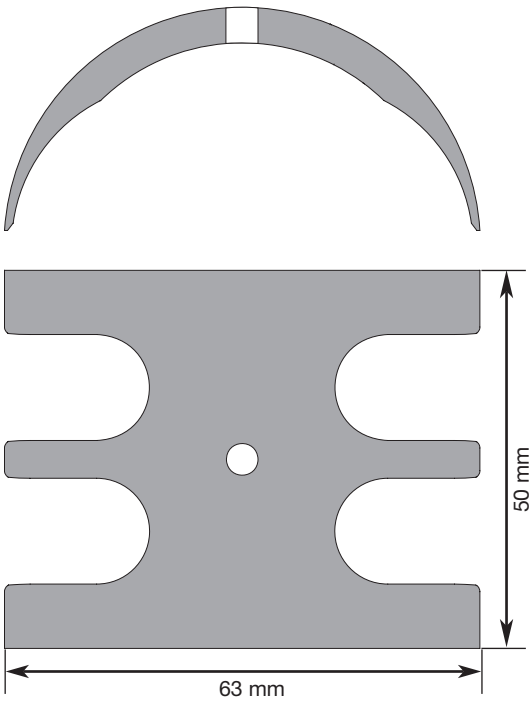

Cam article number 01-46899-1 (2/3)
Screw article number 0.0279.033

F75

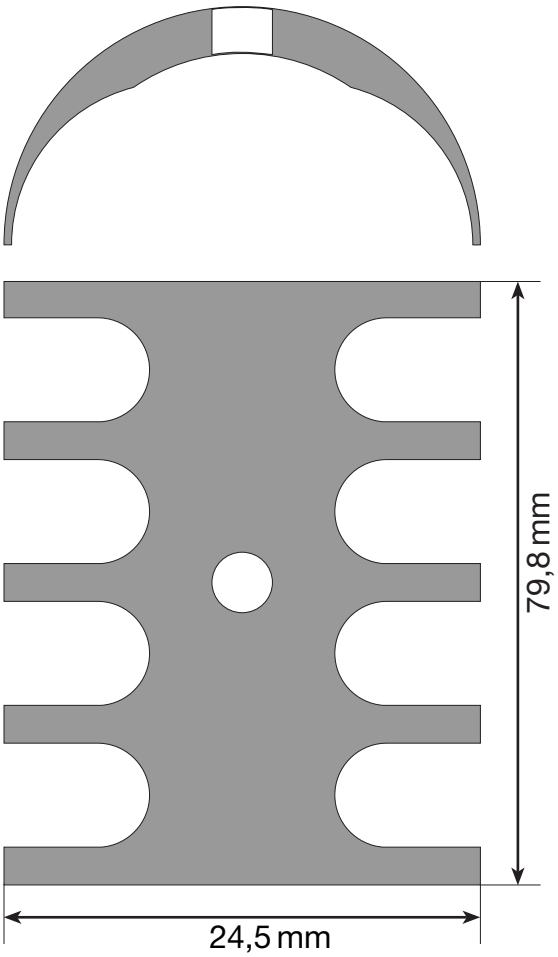

Cam article number 01-46146 (1/1)
Screw article number 01-46794-12 (05-04-638)

F8

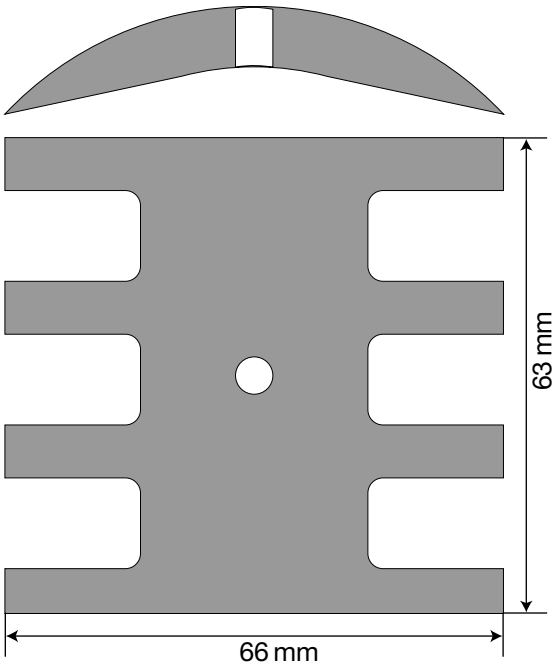

Cam article number 01-42680 (1/1)
replaces Jabsco 834
Screw article number 01-46794-02 (05-04-108)
replaces Jabsco SP1005-04

F8

Cam article number 01-42425 (2/3)
Screw article number 01-46794-02 (05-04-108)

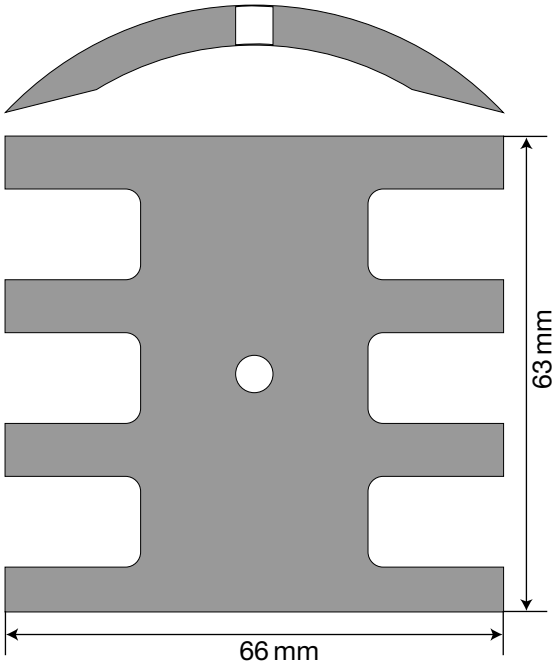

F8

Cam article number 01-42755 (1/2)
replaces Jabsco 2551
Screw article number 01-46794-08 (05-04-147)
replaces Jabsco SP1005-05

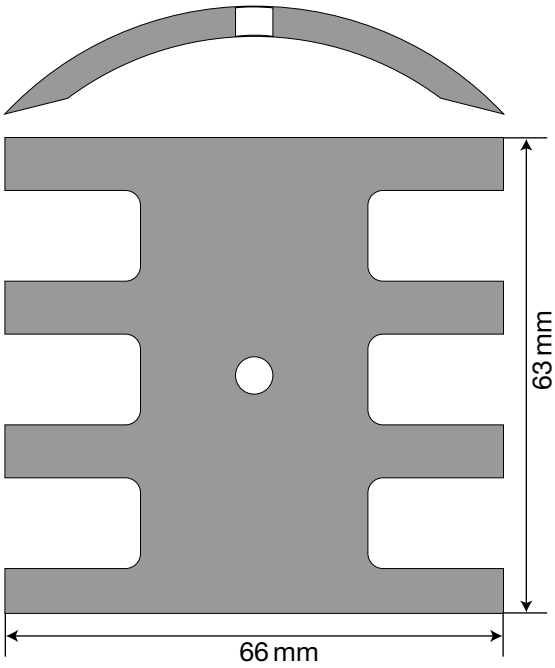

F9

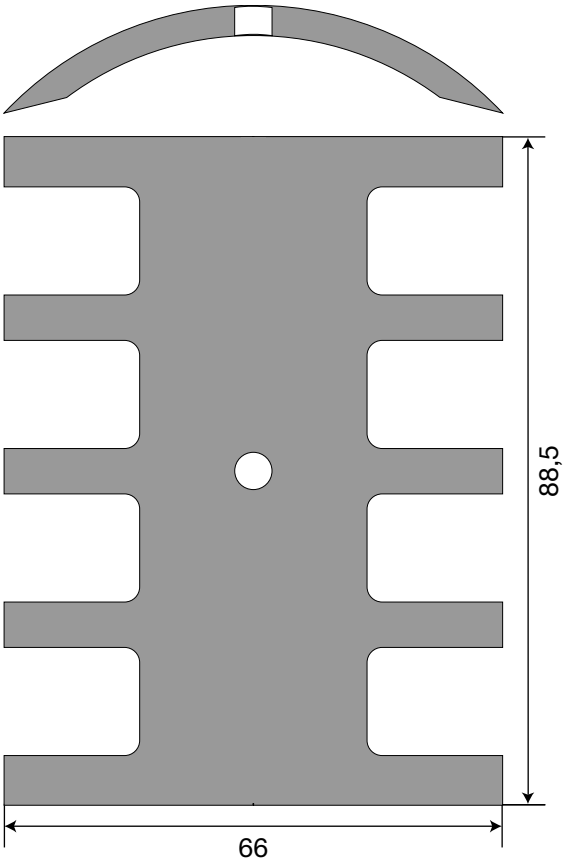

Cam article number 01-43138 (1/2)

replaces Jabsco 22268

Screw article number 01-46794-08 (05-04-147)

replaces Jabsco SP1005-05

F9

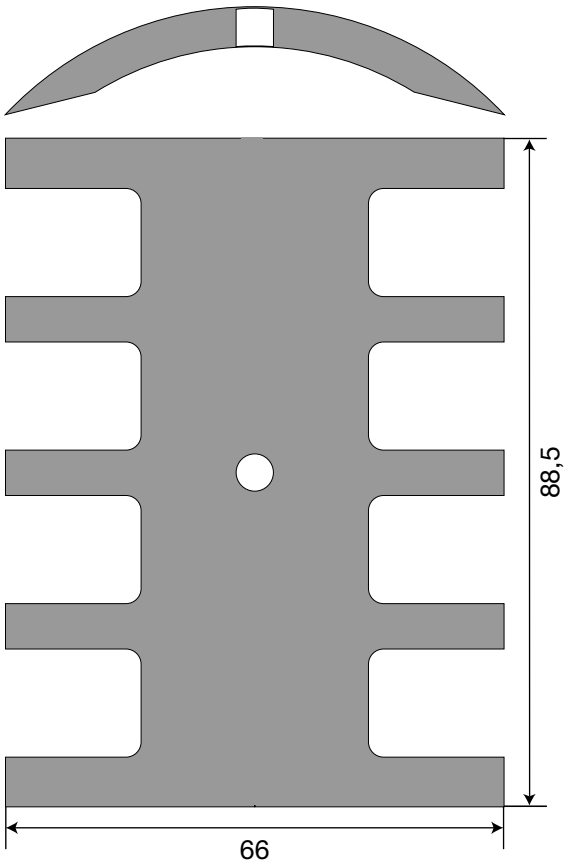

Cam article number 01-43135 (2/3)

replaces Jabsco 22039

Screw article number 01-46794-08 (05-04-147)

replaces Jabsco SP1005-04

F9

Cam article number 01-43137 (1/1)

replaces Jabsco 6988

Screw article number 01-46794-02 (05-04-108)

replaces Jabsco SP1005-04

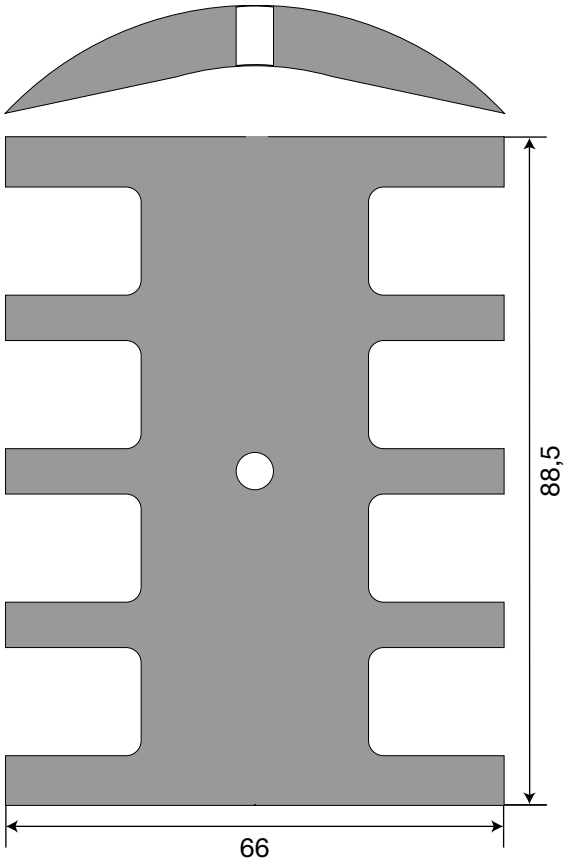

F95

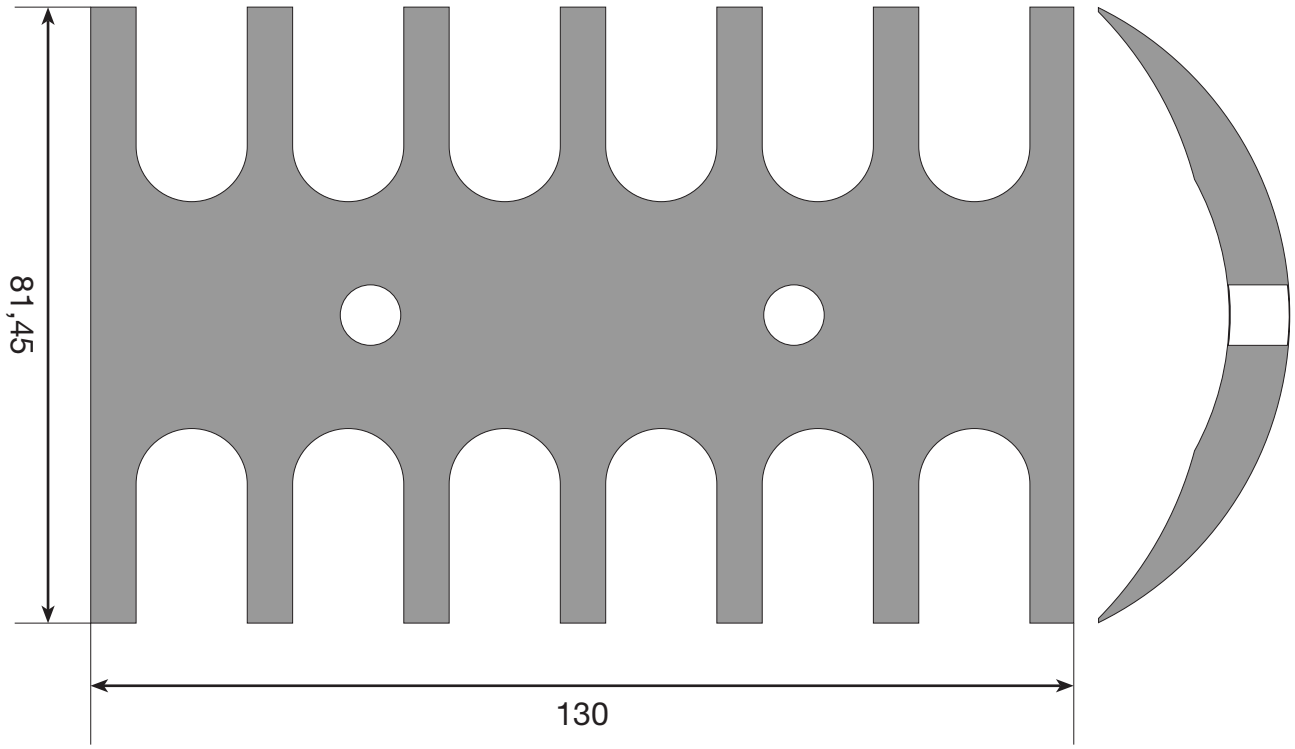

Cam article number 01-35744 (1/1)

Screw article number 01-46794-09 (05-04-515)

Gaskets

F3

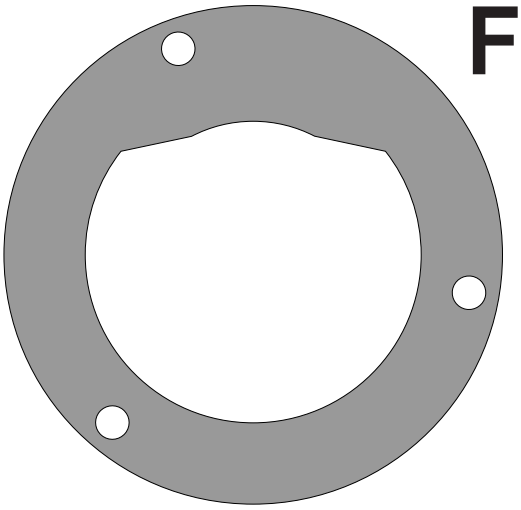

Gasket article number 01-43142

F35

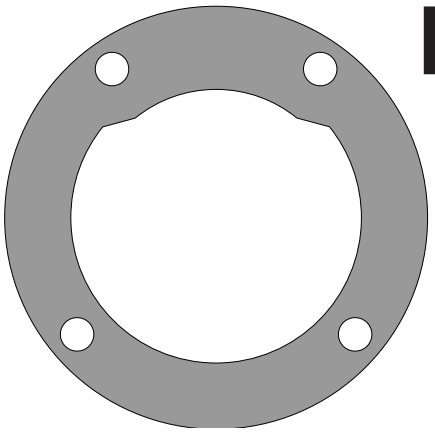

Gasket article number 01-43240

replaces Jabsco 29308

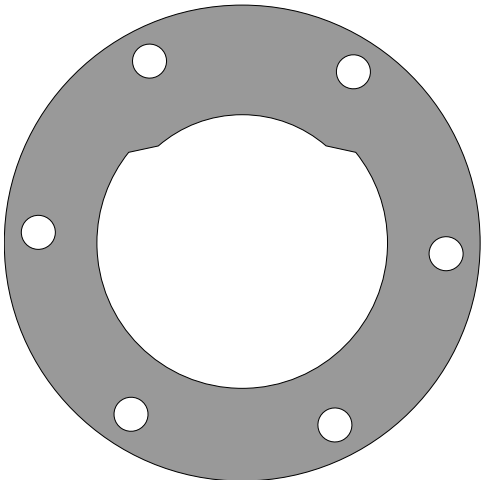

Gasket article number 01-42417

replaces Jabsco 4788

F35

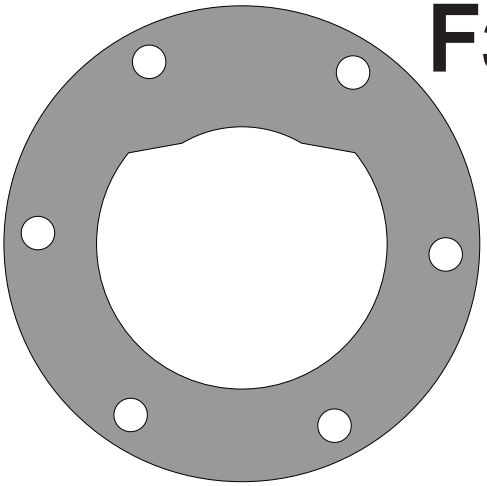

Gasket article number 01-42911

replaces Jabsco 1126

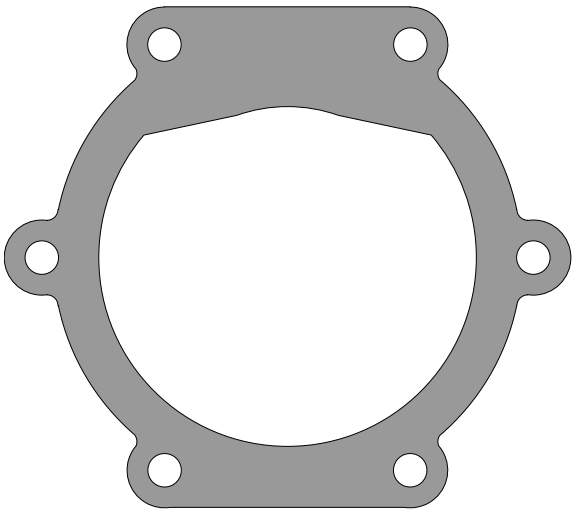

Gasket article number 01-42391

replaces Jabsco 10817

F4

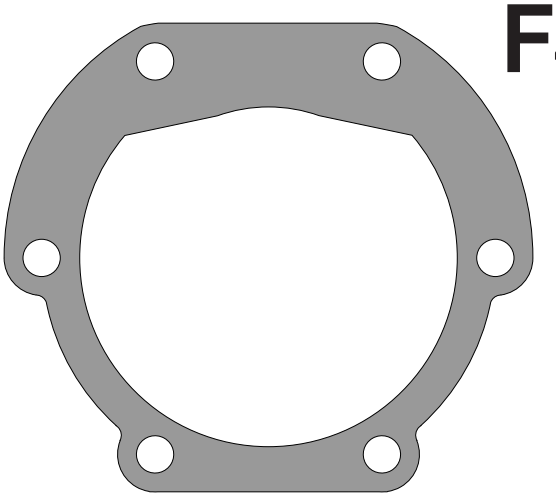

Gasket article number 01-45284

F5

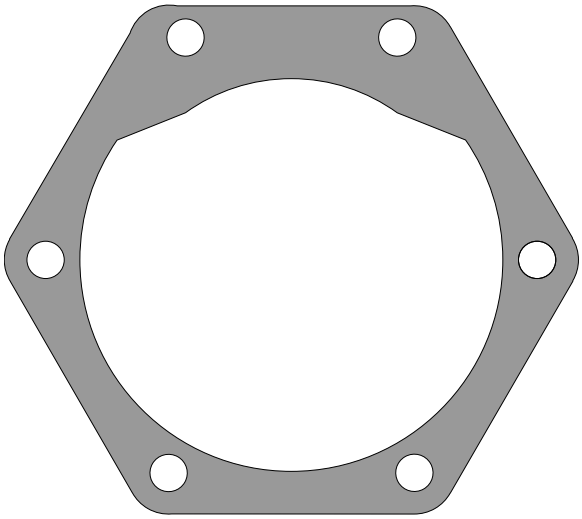

Gasket article number 01-42636

replaces Jabsco 4908

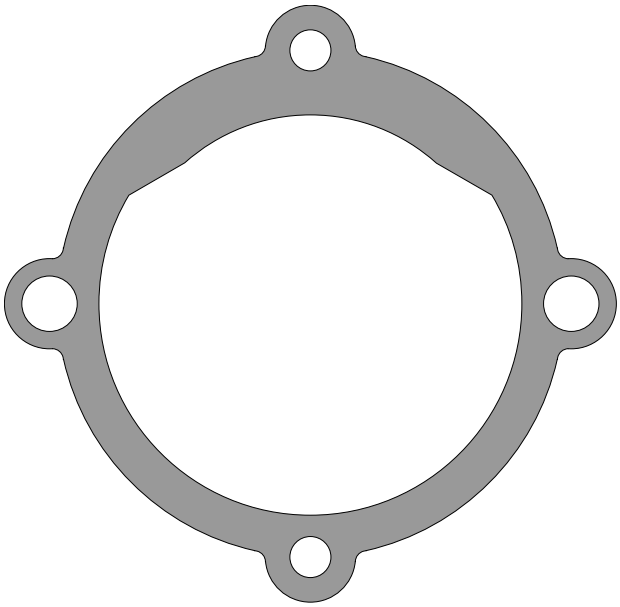

Gasket article number 01-45020

F5

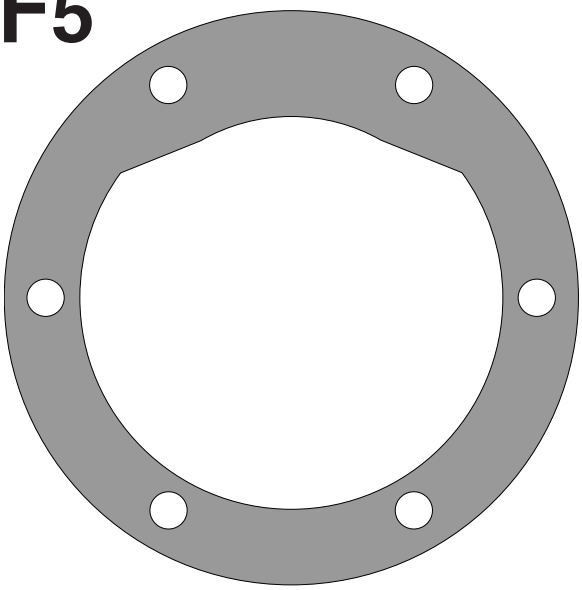

Gasket article number 01-42401

replaces Jabsco 3298

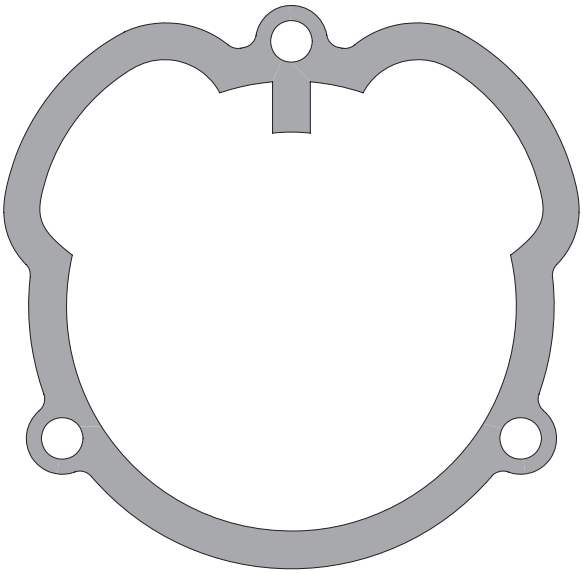

Gasket article number 01-46540

F5/F6

Gasket article number 01-45315

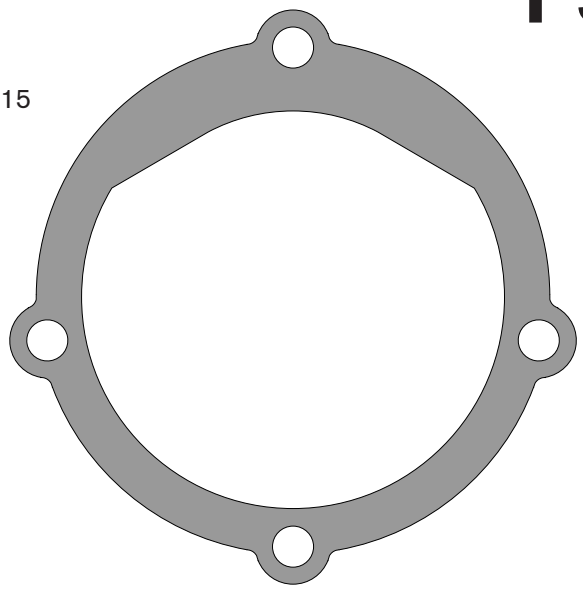

F7

Gasket article number 01-42445
replaces Jabsco 890

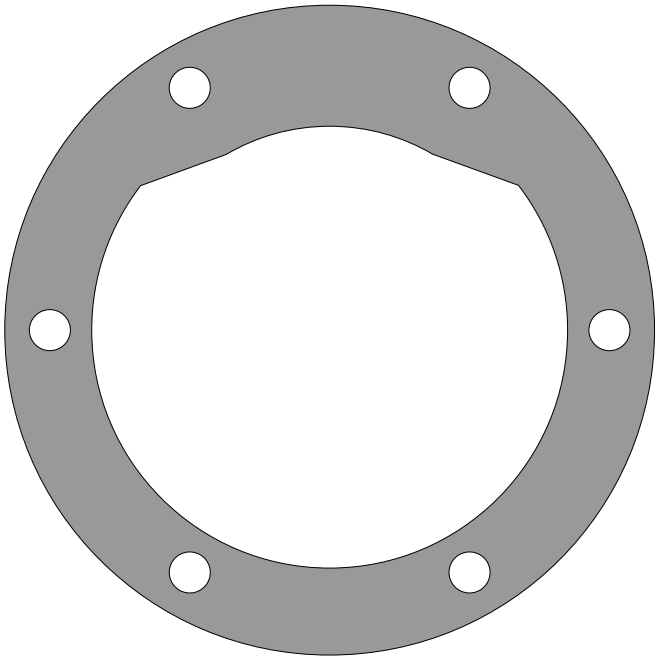

F75

Gasket article number 01-46286

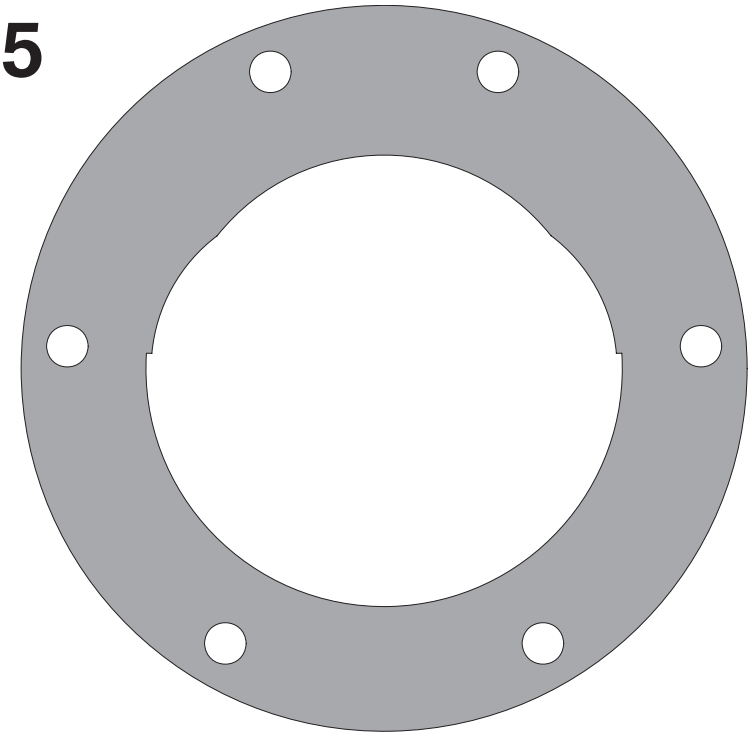

F8

Gasket article number 01-45354

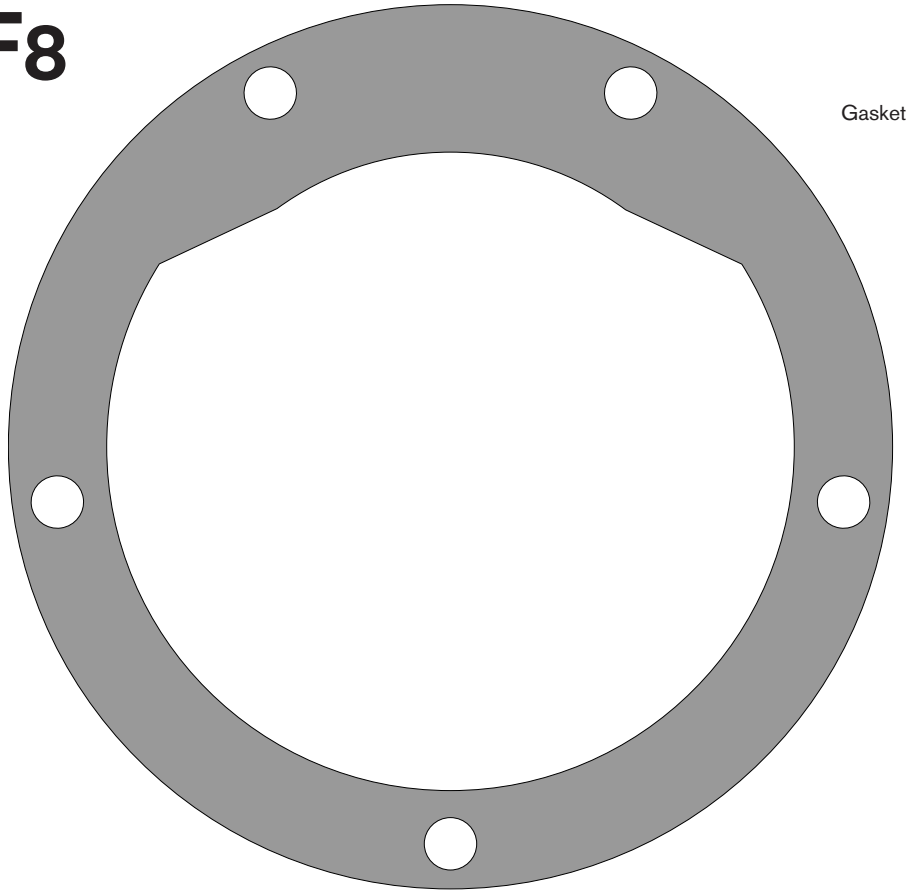

F8/F9

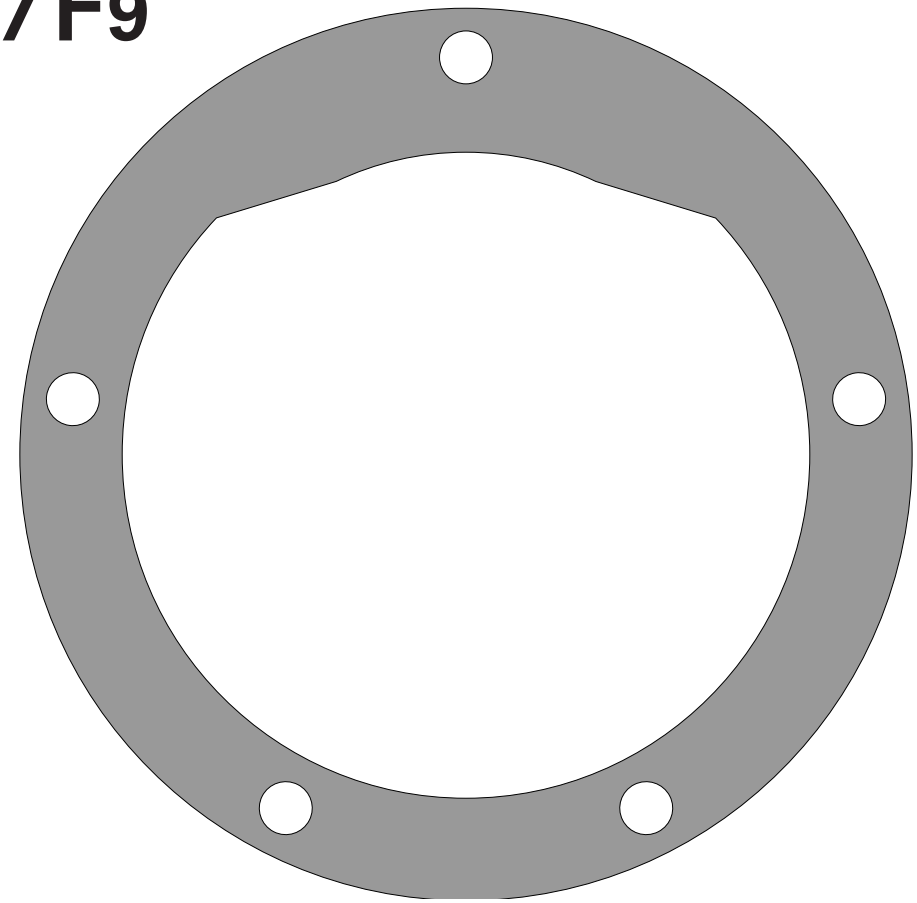

Gasket article number 01-42424

replaces Jabsco 2553

O-rings

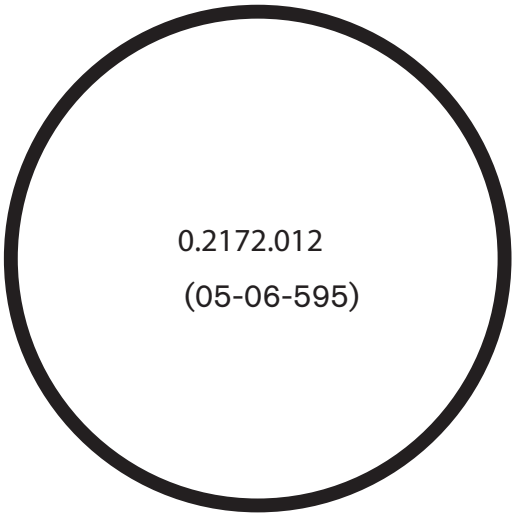
0.2172.012
(05-06-595)

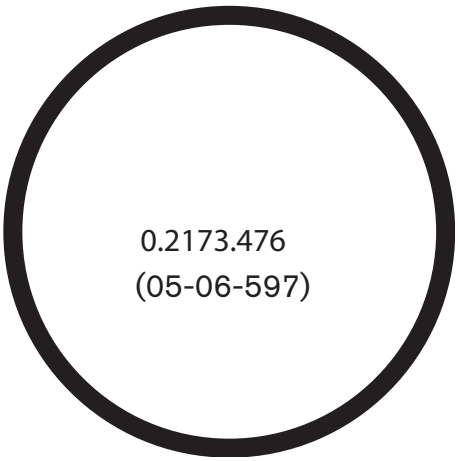
0.2173.476
(05-06-597)

0.2173.475
(05-06-590)

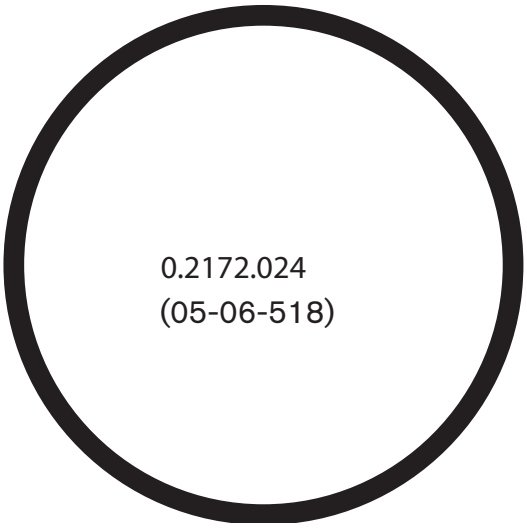
0.2172.024
(05-06-518)

0.2173.436
(05-06-591)

0.2173.440
(05-06-618)

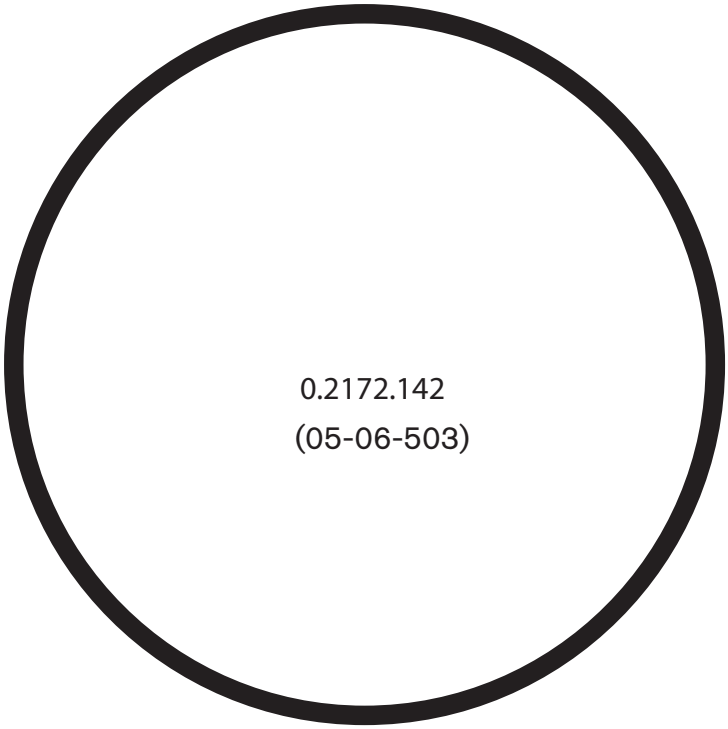
0.2172.142
(05-06-503)

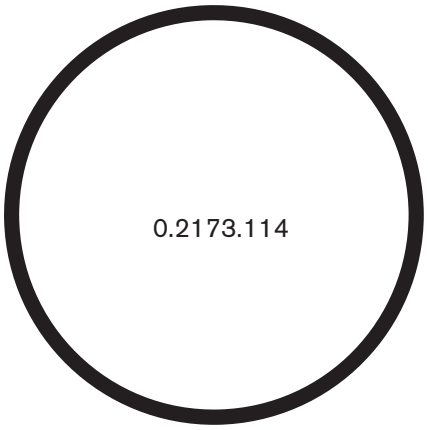
0.2173.114

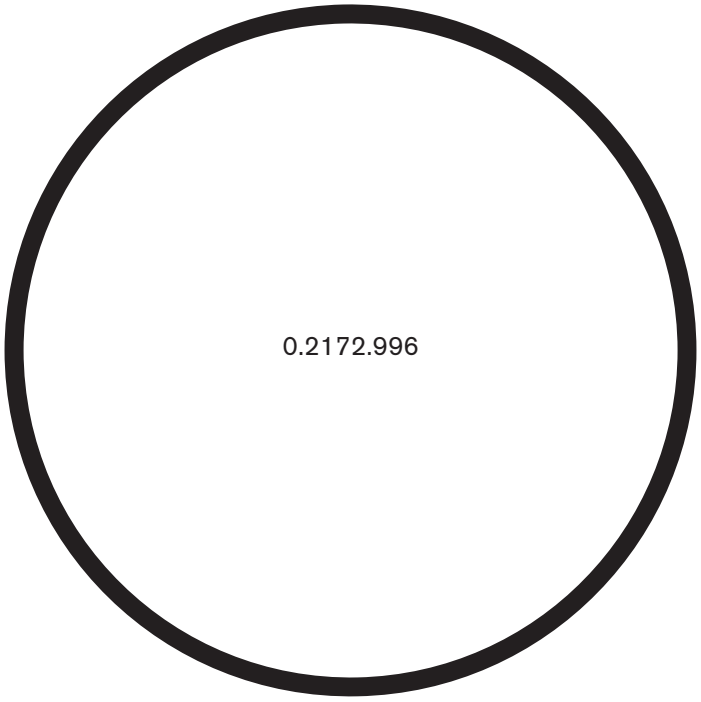
0.2172.996

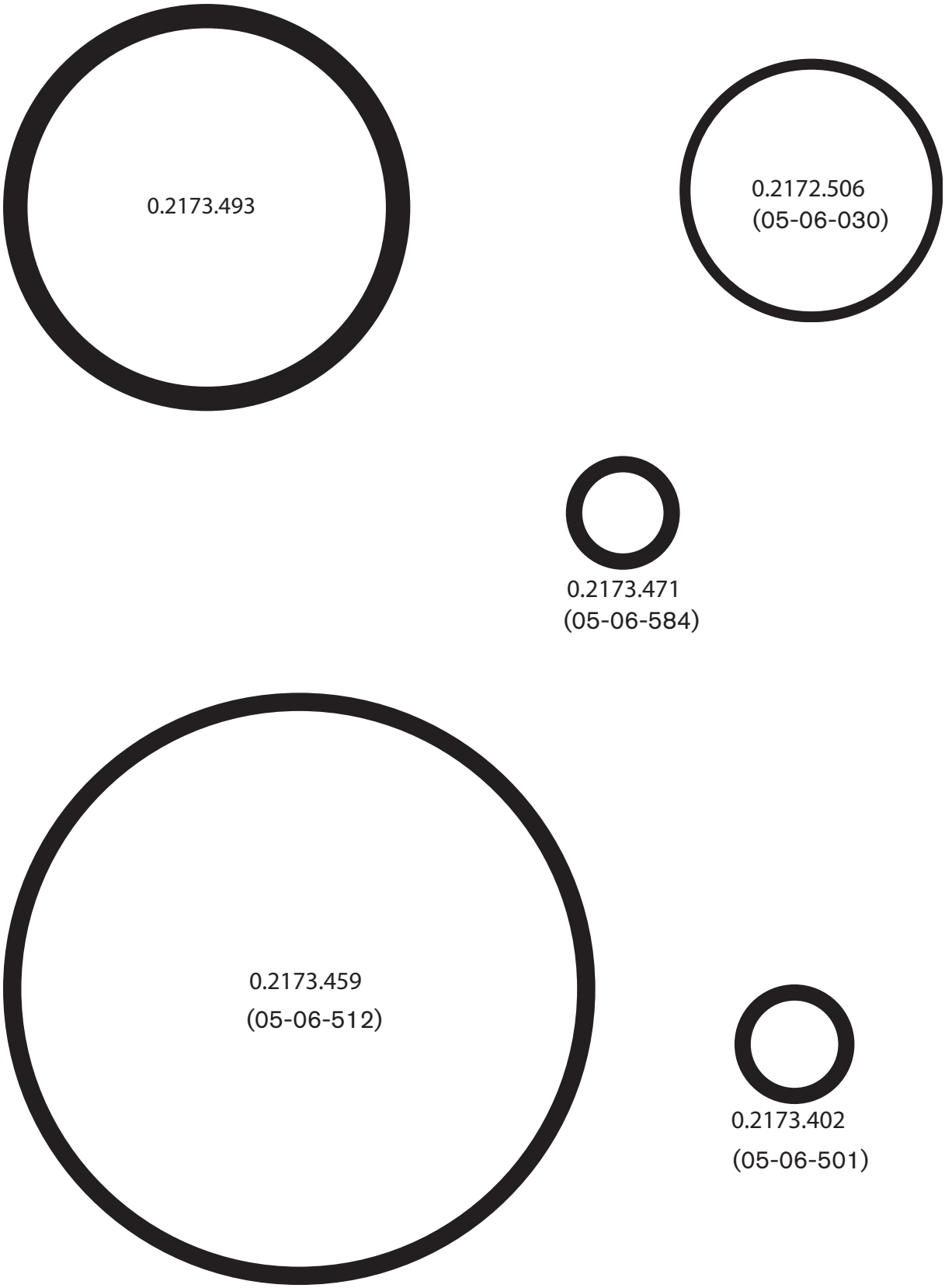
0.2173.493
0.2172.506
(05-06-030)
0.2173.471
(05-06-584)
0.2173.459
(05-06-512)
0.2173.402
(05-06-501)

Endcovers

F3

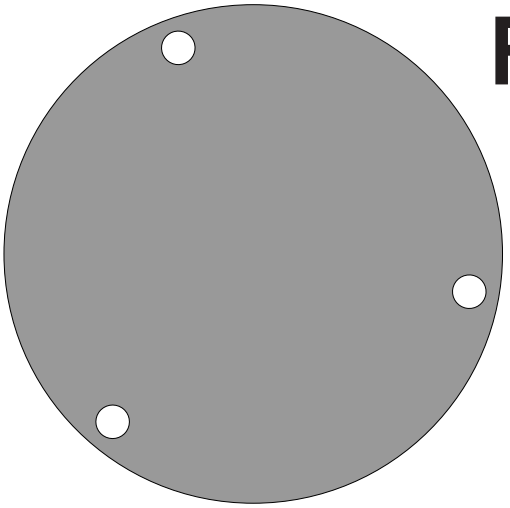

Endcover article number 01-43141

F35

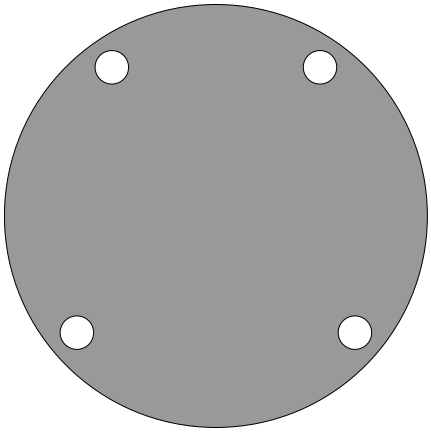

Endcover article number 01-43239

replaces Jabsco 29305

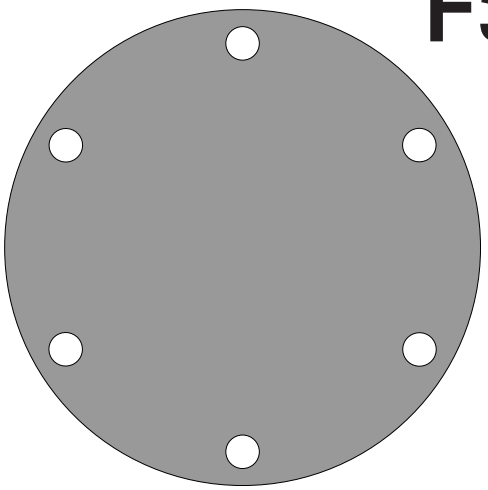

Endcover article number 01-42414

replaces Jabsco AL6-200

F35

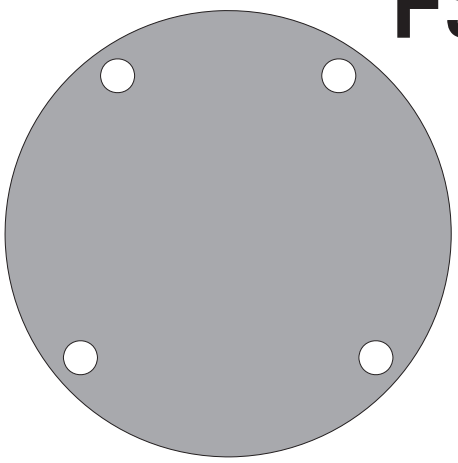

Endcover article number 01-46739-2 (stainless)

F4

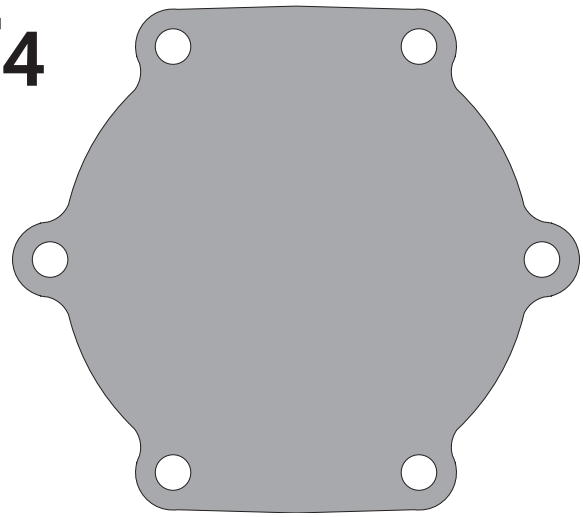

Endcover article number 01-42388-1/-2

replaces Jabsco 9905/9406

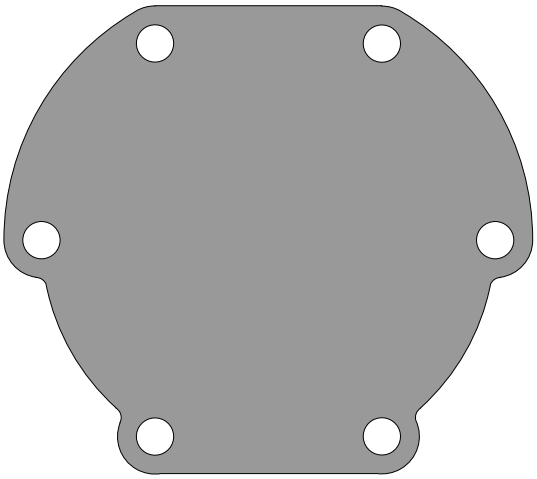

Endcover article number 01-45282

replaces Jabsco 29475

F4/F5

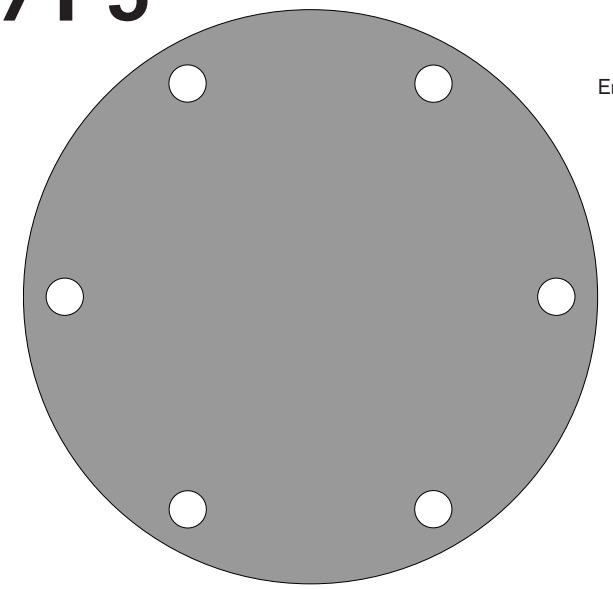

Endcover article number 01-42398

replaces Jabsco 3992

01-46007

01-46007-2 (O-ring)

01-46007-3 (stainless)

F5/F6

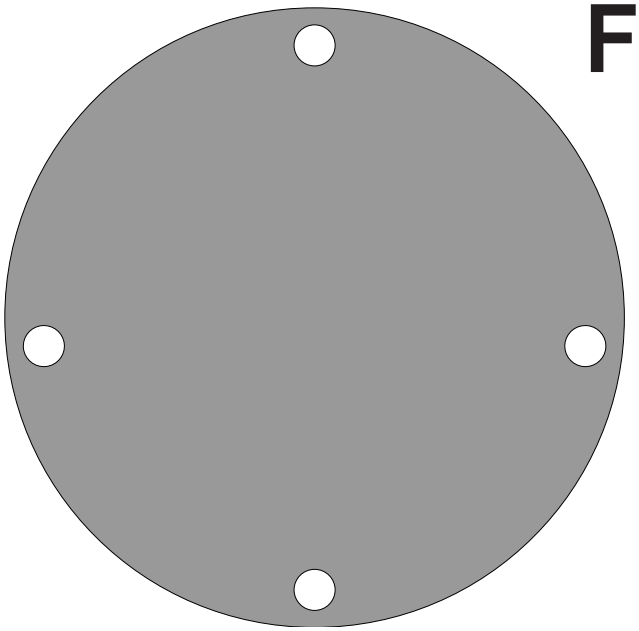

Endcover article number 01-46556

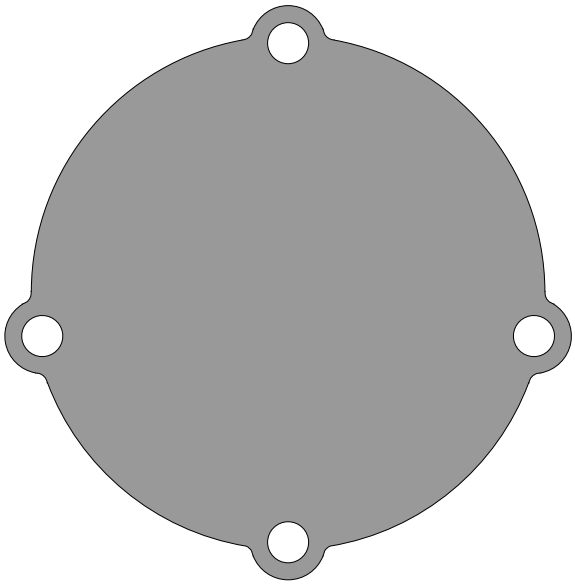

Endcover article number 01-45312-1

F5/F6

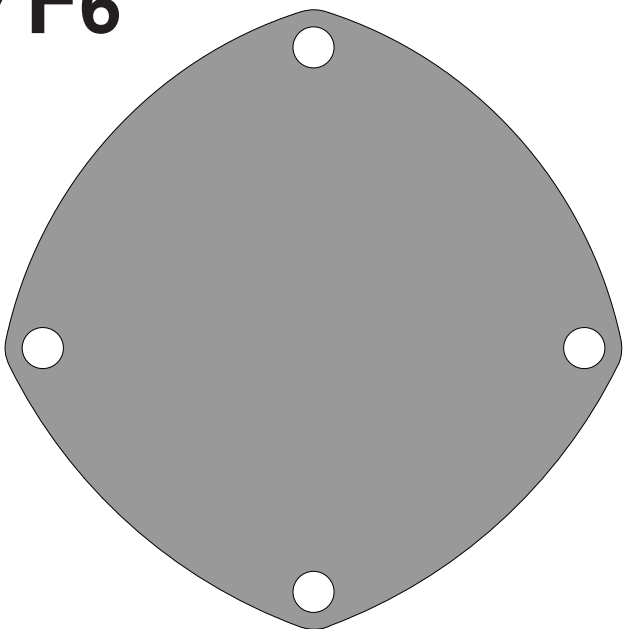

Endcover article number 01-46535

F7

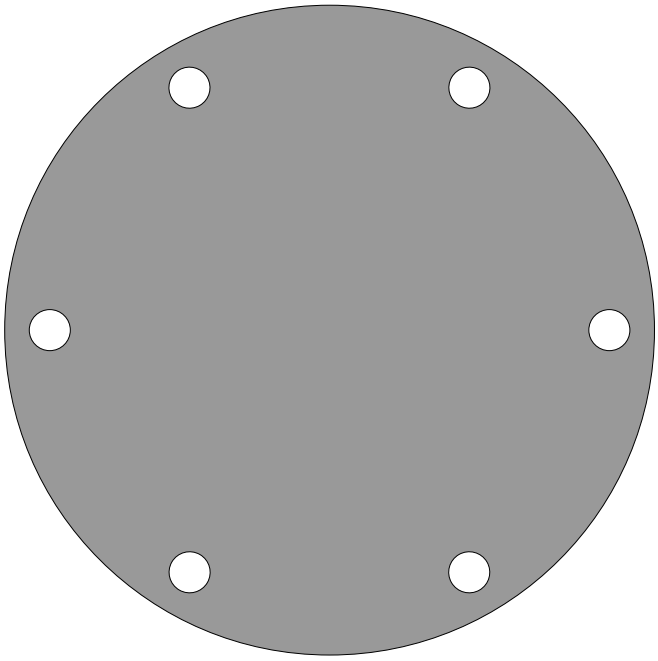

Endcover article number 01-42441
replaces Jabsco 3993
01-46431 (stainless)
01-46648-1 (O-ring)

F75

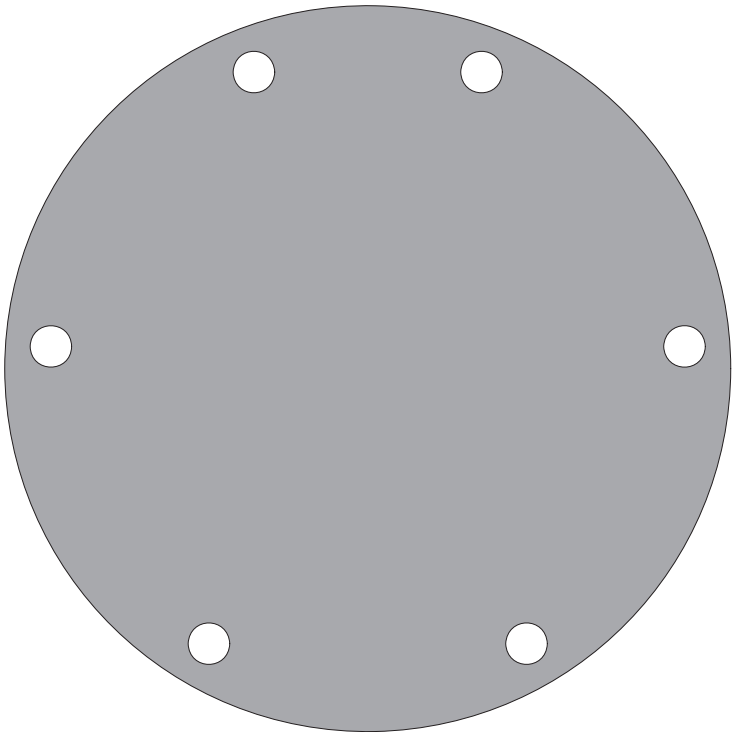

Endcover article number 01-46285

Spare parts

F8/F9/F95B

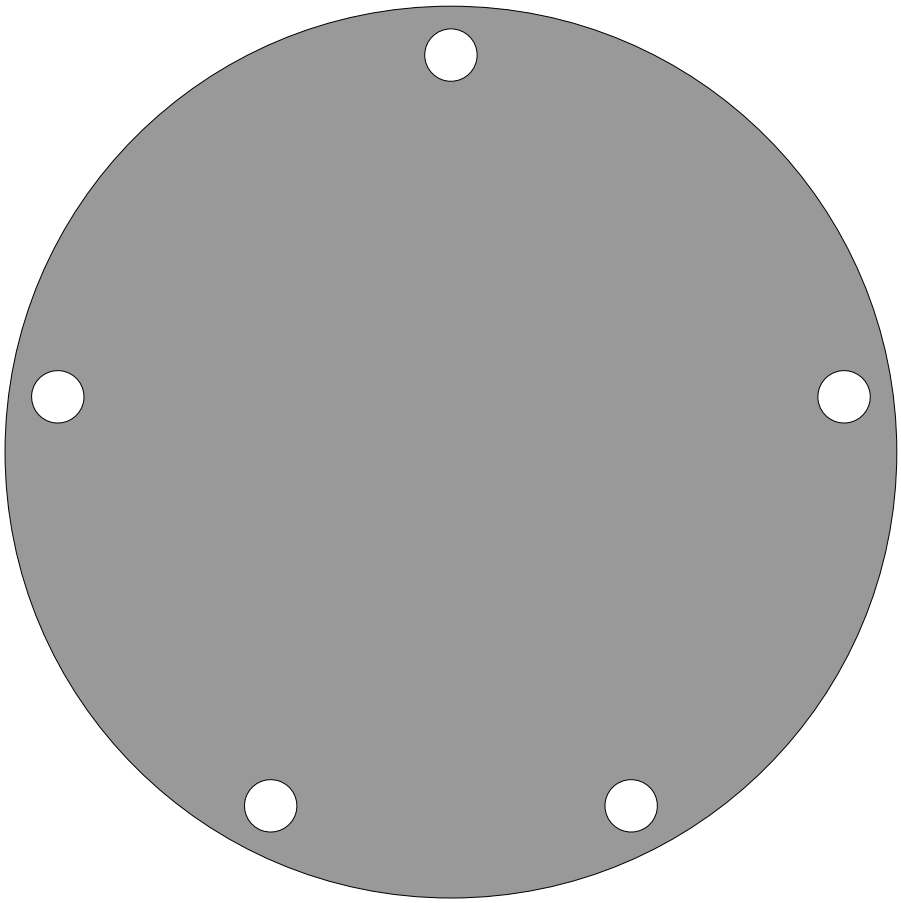

Endcover article number 01-42422-1 (F8/F9)

replaces Jabsco 9336

01-35773 F9 (stainless)

01-35284-2 F95B (O-ring)

F9

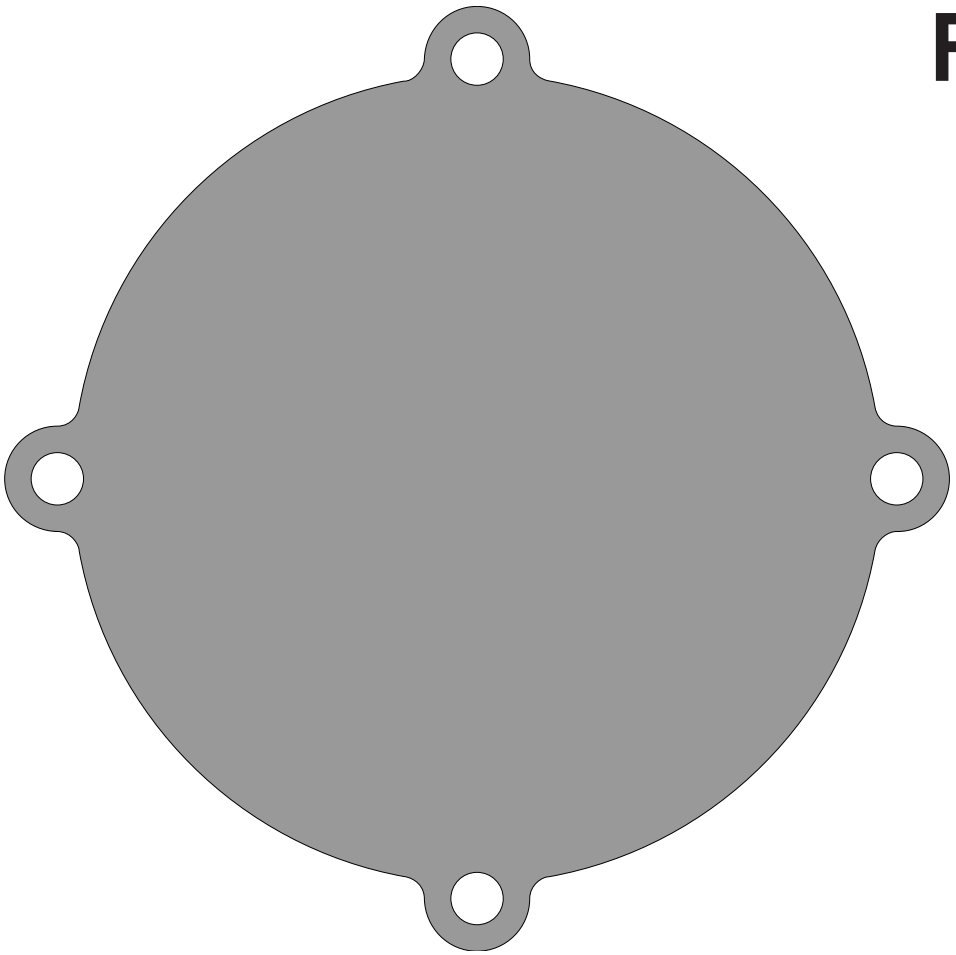

Endcover article number 01-45961

Wear plates

F35

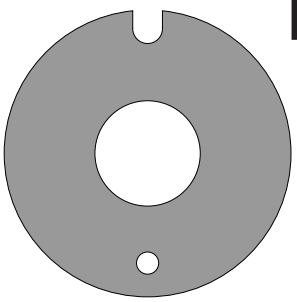

Wear plate article number 01-45087
replaces Jabsco 29306
01-46676 (stainless)

F4

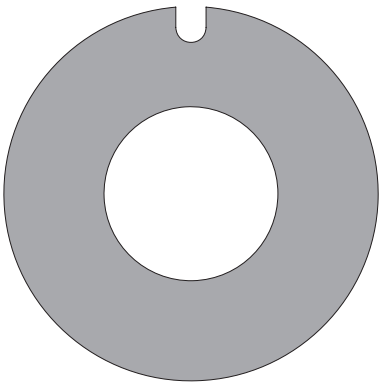

Wear plate article number 01-46737
01-46737-2 (stainless)

F5

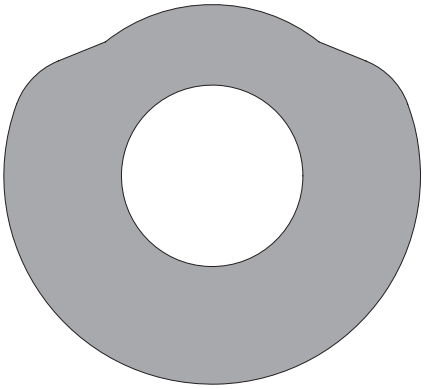

Wear plate article number 01-46532
01-46532-2 (stainless)

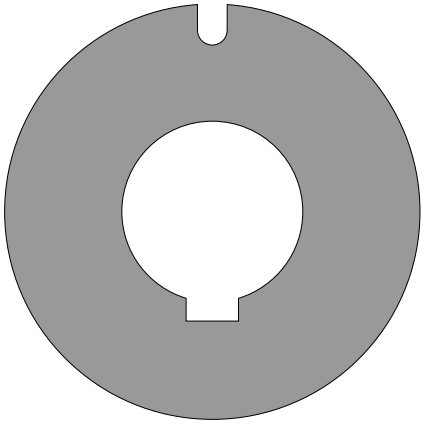

Wear plate article number 01-42399
replaces Jabsco 7883
01-42399-2 (stainless)

F6

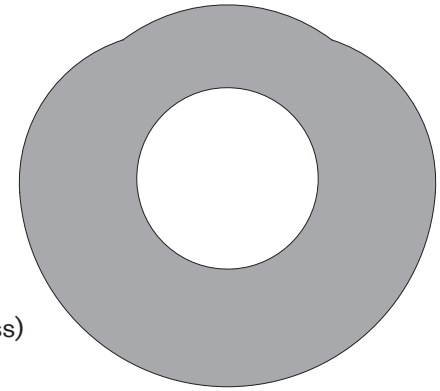

Wear plate article number 01-46969 (stainless)

F7/F75

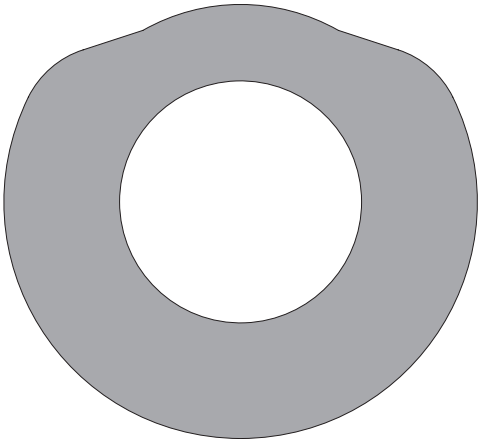

Wear plate article number 01-46647 (stainless)

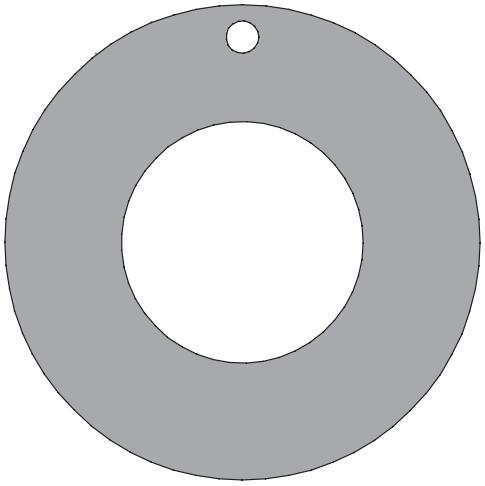

Wear plate article number 01-46798-1
01-46798-2 (stainless)

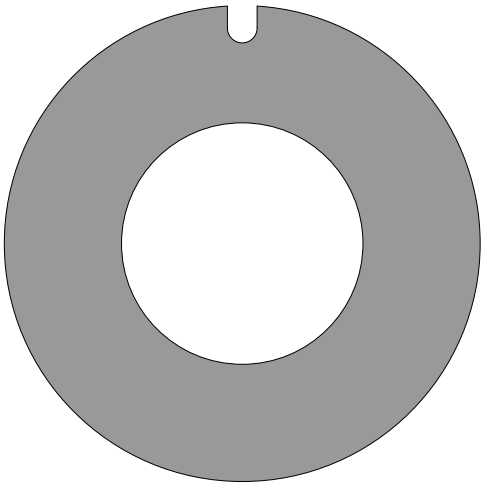

Wear plate article number 01-42443
replaces Jabsco 4156

F8/F9/F95

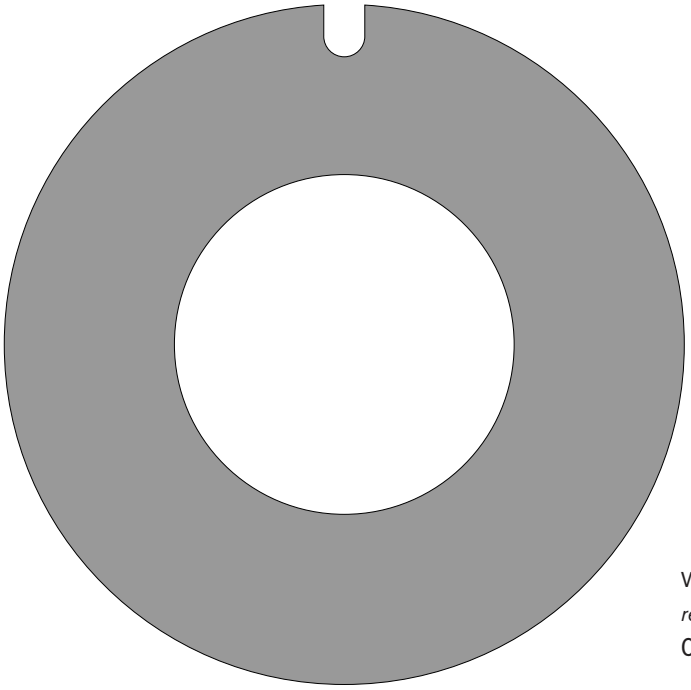

Wear plate article number 01-42423
replaces Jabsco 2574
01-46538 (stainless)

Service Kit and Part Reference Guide

Flexible
Impeller
Pumps
FB-series

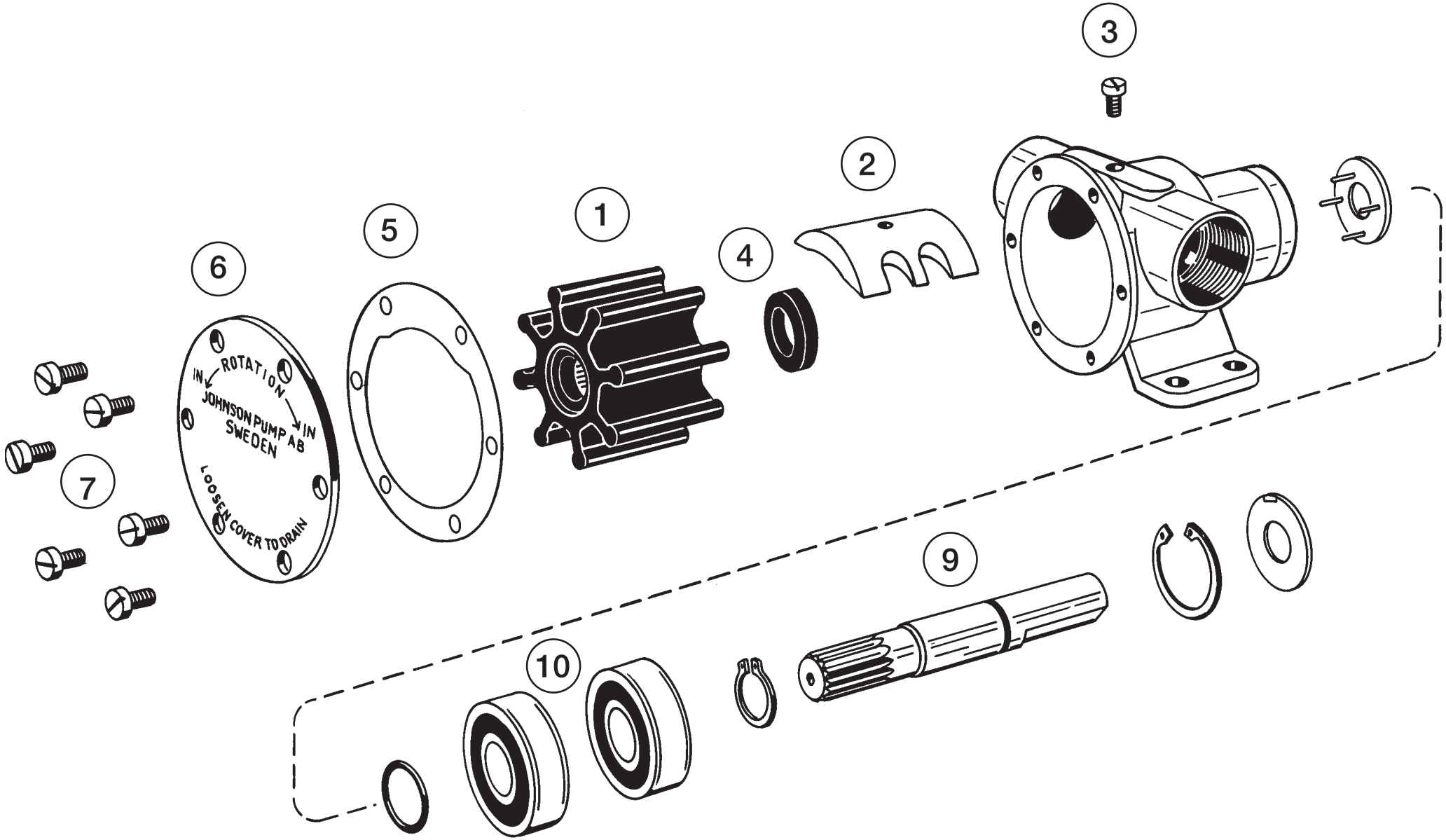
3
2
1
5
4
6
7
9
10
ROTATION
IN
IN
JOHNSON PUMP AB
SWEDEN
LOOSEN COVER TO DRAIN

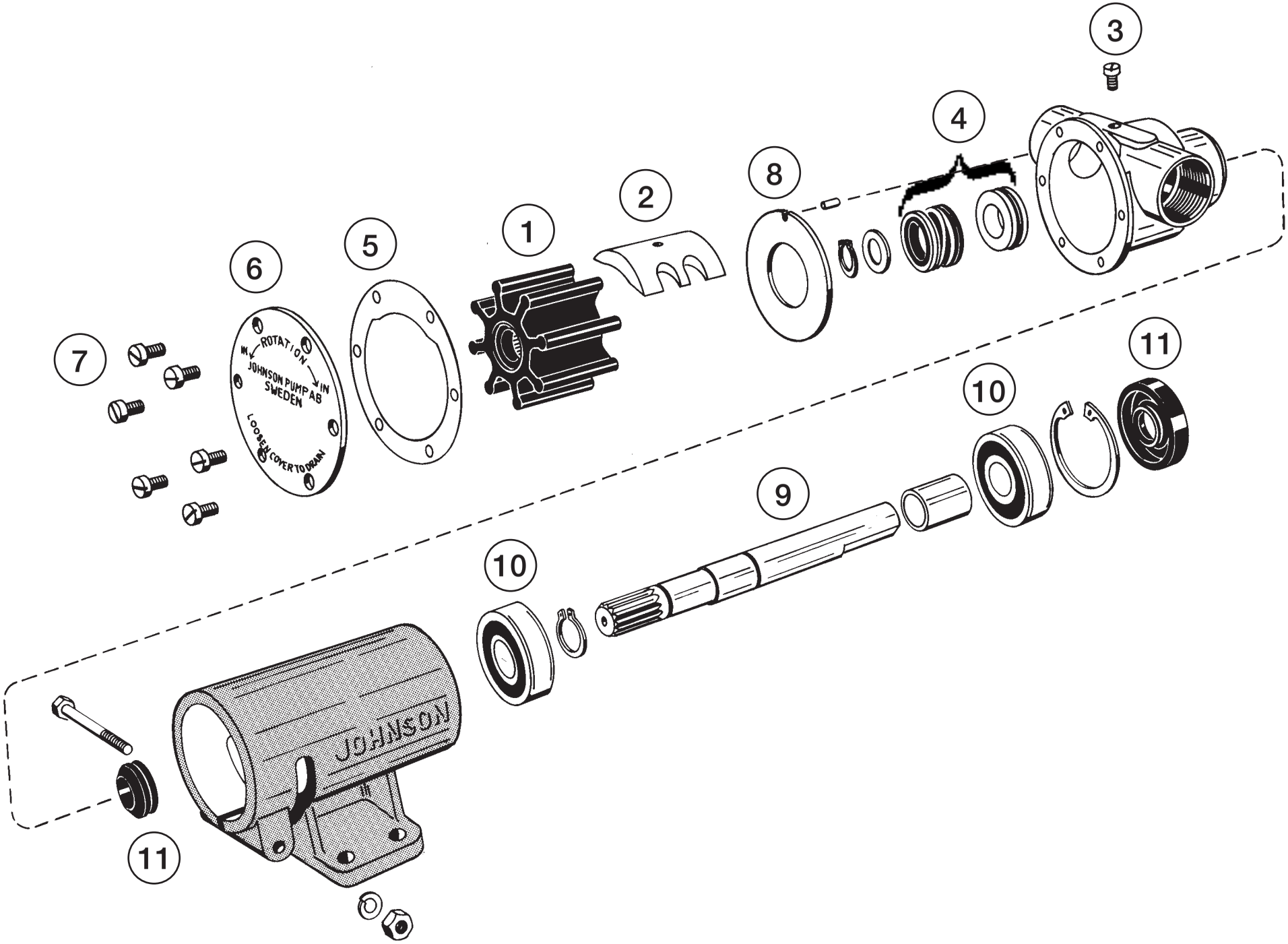
3
4
8
2
1
5
6
7
ROTATION
IN
IN
JOHNSON PUMP AB
SWEDEN
LOOSEN COVER TO DRAIN
11
10
9
10
JOHNSON
11

Johnson Flexible Impeller Pumps

Part no.	Pump type	A Service kit	1 Impeller	2 Cam	3 Camscrew	4 Seal	5 Gasket	6 Endcover	7 Endcover screw	8 Wearplate	9 Shaft	10 Bearing	11 Bearing seal	Clutch or Motor
10-11236-2 Obsolete	F7B-903	09-45590	09-1028B*	01-42442	01-46794-07	09-0.2247.050	01-42445	01-42441	01-46794-05	01-42443	Obsolete	0.3431.523	Obsolete	-
10-11236-3 Obsolete	F7B-902	09-45590	09-1028B*	01-42584	01-46794-06	09-0.2247.050	01-42445	01-42441	01-46794-05	01-42443	Obsolete	0.3431.523	Obsolete	-
10-11246-1 Obsolete	F5B-9	09-45583	09-1027B-1*	01-42397	01-46794-05	09-0.2247.050	01-42401	01-42398	01-46794-04	01-42399	Obsolete	0.3431.523	Obsolete	-
10-13021-1	F8B-8	09-45575	09-819B	01-42680	01-46794-02	09-0.2247.008	01-42424	01-42422-1	0.0138.134	01-42423	01-35132	0.3431.780	-	-
10-13021-2 Not in production	F8B-89	09-45576	09-819B-9	01-42680	01-46794-02	09-0.2247.008	01-42424	01-42422-1	0.0138.134	01-42423	01-35132	0.3431.780	-	-
10-13021-3 Not in production	F8B-803	09-45575	09-819B	01-42425	01-46794-02	09-0.2247.008	01-42424	01-42422-1	0.0138.134	01-42423	01-35132	0.3431.780	-	-
10-13021-4 Not in production	F8B-893	09-45576	09-819B-9	01-42425	01-46794-02	09-0.2247.008	01-42424	01-42422-1	0.0138.134	01-42423	01-35132	0.3431.780	-	-
10-13021-5 Not in production	F8B-8	09-45577	09-819B	01-42680	01-46794-02	0.2233.015	01-42424	01-42422-1	0.0138.134	01-42423	01-35132	0.3431.780	-	-
10-13021-6 Not in production	F8B-89	09-45578	09-819B-9	01-42680	01-46794-02	0.2233.015	01-42424	01-42422-1	0.0138.134	01-42423	01-35132	0.3431.780	-	-
10-13021-7 Not in production	F8B-803	09-45577	09-819B	01-42425	01-46794-02	0.2233.015	01-42424	01-42422-1	0.0138.134	01-42423	01-35132	0.3431.780	-	-
10-13021-8 Not in production	F8B-893	09-45578	09-819B-9	01-42425	01-46794-02	0.2233.015	01-42424	01-42422-1	0.0138.134	01-42423	01-35132	0.3431.780	-	-
10-13021-9	F8B-8007	09-45575	09-819B	01-42680	01-46794-02	09-0.2247.008	01-42424	01-42422-1	0.0138.134	01-42423	01-35132	0.3431.780	-	-
10-13021-10 Not in production	F8B-8907	09-45576	09-819B-9	01-42680	01-46794-02	09-0.2247.008	01-42424	01-42422-1	0.0138.134	01-42423	01-35132	0.3431.780	-	-
10-13021-11 Not in production	F8B-8037	09-45575	09-819B	01-42425	01-46794-02	09-0.2247.008	01-42424	01-42422-1	0.0138.134	01-42423	01-35132	0.3431.780	-	-
10-13021-12 Not in production	F8B-8937	09-45576	09-819B-9	01-42425	01-46794-02	09-0.2247.008	01-42424	01-42422-1	0.0138.134	01-42423	01-35132	0.3431.780	-	-
10-13021-13 Not in production	F8B-8007	09-45577	09-819B	01-42680	01-46794-02	0.2233.015	01-42424	01-42422-1	0.0138.134	01-42423	01-35132	0.3431.780	-	-
10-13021-14 Not in production	F8B-8907	09-45578	09-819B-9	01-42680	01-46794-02	0.2233.015	01-42424	01-42422-1	0.0138.134	01-42423	01-35132	0.3431.780	-	-
10-13021-15	F8B-8037	09-45577	09-819B	01-42425	01-46794-02	0.2233.015	01-42424	01-42422-1	0.0138.134	01-42423	01-35132	0.3431.780	-	-

A *- parts no. 1, 4, 5, 7 included* * *- gasket included* ** *- shaft drive end* *** *- included in service kit* **** *- back* ***** *- front*

Johnson Flexible Impeller Pumps

Part no.	Pump type	A Service kit	1 Impeller	2 Cam	3 Camscrew	4 Seal	5 Gasket	6 Endcover	7 Endcover screw	8 Wearplate	9 Shaft	10 Bearing	11 Bearing seal	Clutch or Motor
Not in production														
10-13021-16 Not in production	F8B-8937	09-45578	09-819B-9	01-42425	01-46794-02	0.2233.015	01-42424	01-42422-1	0.0138.134	01-42423	01-35132	0.3431.780	-	-
10-13021-17 Obsolete	F8B-8	09-45575	09-819B	01-42680	01-46794-02	09-0.2247.008	01-42424	01-46006	0.0138.134	01-42423	01-35132	0.3431.780	-	-
10-13021-91	F8B-8007	09-45575	09-819B	01-42680	01-46794-02	09-0.2247.008	01-42424	01-42422-1	0.0138.134	01-42423	01-35720	0.3431.780	-	-
10-13021-92 Not in production	F8B-8007	09-45575	09-819B	01-42680	01-46794-02	09-0.2247.008	01-42424	01-42422-1	0.0138.134	01-42423	01-35746	0.3431.780	-	-
10-13021-95	F8B-8007	09-45575	09-819B	01-42680	01-46794-02	09-0.2247.008	01-42424	01-42422-1	0.0138.134	01-42423	01-35746	0.3431.780	-	-
10-13021-96	F8B-8007	09-45575	09-819B	01-42680	01-46794-02	09-0.2247.008	01-42424	01-42422-1	0.0138.134	01-42423	01-35746	0.3431.780	-	-
10-13022-83 Obsolete	F8B-5001	09-45575	09-819B	01-42680	01-46794-02	09-0.2247.008	01-42424	01-46006	0.0138.134	01-42423	01-35136	0.3431.780	-	0.3454.001 = 12V 2xA 0.3454.002 = 24V 2xA 0.3454.003 = 12V 1xB 0.3454.004 = 24V 1xB
10-13022-95	F8B-50017	09-45575	09-819B	01-42680	01-46794-02	09-0.2247.008	01-42424	01-42422-1	0.0138.134	01-42423	01-35136	0.3431.780	-	0.3454.001 = 12V 2xA 0.3454.002 = 24V 2xA 0.3454.003 = 12V 1xB 0.3454.004 = 24V 1xB
10-13022-96	F8B-50017	09-45575	09-819B	01-42680	01-46794-02	09-0.2247.008	01-42424	01-42422-1	0.0138.134	01-42423	01-35136	0.3431.780	-	0.3454.001 = 12V 2xA 0.3454.002 = 24V 2xA 0.3454.003 = 12V 1xB 0.3454.004 = 24V 1xB

A *- parts no. 1, 4, 5, 7 included* * *- gasket included* ** *- shaft drive end* *** *- included in service kit* **** *- back* ***** *- front*

Johnson Flexible Impeller Pumps

Part no.	Pump type	A Service kit	1 Impeller	2 Cam	3 Camscrew	4 Seal	5 Gasket	6 Endcover	7 Endcover screw	8 Wearplate	9 Shaft	10 Bearing	11 Bearing seal	Clutch or Motor
10-13022-98	F8B-50017	09-45575	09-819B	01-42680	01-46794-02	09-0.2247.008	01-42424	01-42422-1	0.0138.134	01-42423	01-35136	0.3431.780	-	0.3454.001 = 12V 2xA 0.3454.002 = 24V 2xA 0.3454.003 = 12V 1xB 0.3454.004 = 24V 1xB
10-13022-99	F8B-5001	09-45575	09-819B	01-42680	01-46794-02	09-0.2247.008	01-42424	01-42422-1	0.0138.134	01-42423	01-35136	0.3431.780	-	0.3454.001 = 12V 2xA 0.3454.002 = 24V 2xA 0.3454.003 = 12V 1xB 0.3454.004 = 24V 1xB
10-13024-1	F8B-3000	09-45579	09-819B	01-42680	01-46794-02	09-0.2247.051	01-42424	01-42422-1	0.0144.200	01-42423	01-35137	0.3431.780	0.2234.337/ 0.2230.319	-
10-13024-2 Not in production	F8B-3900	09-45580	09-819B-9	01-42680	01-46794-02	09-0.2247.051	01-42424	01-42422-1	0.0144.200	01-42423	01-35137	0.3431.780	0.2234.337/ 0.2230.319	-
10-13024-3	F8B-3030	09-45579	09-819B	01-42425	01-46794-02	09-0.2247.051	01-42424	01-42422-1	0.0144.200	01-42423	01-35137	0.3431.780	0.2234.337/ 0.2230.319	-
10-13024-4 Not in production	F8B-3930	09-45580	09-819B-9	01-42425	01-46794-02	09-0.2247.051	01-42424	01-42422-1	0.0144.200	01-42423	01-35137	0.3431.780	0.2234.337/ 0.2230.319	-
10-13024-5 Not in production	F8B-3020	09-45579	09-819B	01-42755	01-46794-08	09-0.2247.051	01-42424	01-42422-1	0.0144.200	01-42423	01-35137	0.3431.780	0.2234.337/ 0.2230.319	-
10-13024-6 Not in production	F8B-3920	09-45580	09-819B-9	01-42755	01-46794-08	09-0.2247.051	01-42424	01-42422-1	0.0144.200	01-42423	01-35137	0.3431.780	0.2234.337/ 0.2230.319	-
10-13025-99	F8B-5000	09-45579	09-819B	01-42680	01-46794-02	09-0.2247.051	01-42424	01-42422-1	0.0144.200	01-42423	01-35138	0.3431.780	0.2230.319	0.3454.001 = 12V 2xA 0.3454.002 = 24V 2xA 0.3454.003 = 12V 1xB 0.3454.004 = 24V 1xB
10-13026-1	F9B-3000	09-45581	09-802B	01-43137	01-46794-02	09-0.2247.051	01-42424	01-42422-1	0.0144.200	01-42423	01-35137	0.3431.780	0.2234.337/ 0.2230.319	-
10-13026-2 Not in production	F9B-3030	09-45581	09-802B	01-43135	01-46794-02	09-0.2247.051	01-42424	01-42422-1	0.0144.200	01-42423	01-35137	0.3431.780	0.2234.337/ 0.2230.319	-

A *- parts no. 1, 4, 5, 7 included* * *- gasket included* ** *- shaft drive end* *** *- included in service kit* **** *- back* ***** *- front*

Johnson Flexible Impeller Pumps

Part no.	Pump type	A Service kit	1 Impeller	2 Cam	3 Camscrew	4 Seal	5 Gasket	6 Endcover	7 Endcover screw	8 Wearplate	9 Shaft	10 Bearing	11 Bearing seal	Clutch or Motor
10-13026-3 Not in production	F9B-3020	09-45581	09-802B	01-43138	01-46794-08	09-0.2247.051	01-42424	01-42422-1	0.0144.200	01-42423	01-35137	0.3431.780	0.2234.337/ 0.2230.319	-
10-13026-4 Not in production	F9B-3600	09-45582	09-814B	01-43137	01-46794-02	09-0.2247.051	01-42424	01-42422-1	0.0144.200	01-42423	01-35137	0.3431.780	0.2234.337/ 0.2230.319	-
10-13026-5 Not in production	F9B-3630	09-45582	09-814B	01-43135	01-46794-02	09-0.2247.051	01-42424	01-42422-1	0.0144.200	01-42423	01-35137	0.3431.780	0.2234.337/ 0.2230.319	-
10-13026-6 Not in production	F9B-3620	09-45582	09-814B	01-43138	01-46794-08	09-0.2247.051	01-42424	01-42422-1	0.0144.200	01-42423	01-35137	0.3431.780	0.2234.337/ 0.2230.319	-
10-13026-7 Not in production	F9B-3007	09-45581	09-802B	01-43137	01-46794-02	09-0.2247.051	01-42424	01-42422-1	0.0144.200	01-42423	01-35137	0.3431.780	0.2234.337/ 0.2230.319	-
10-13026-8 Not in production	F9B-3037	09-45581	09-802B	01-43135	01-46794-02	09-0.2247.051	01-42424	01-42422-1	0.0144.200	01-42423	01-35137	0.3431.780	0.2234.337/ 0.2230.319	-
10-13026-9 Not in production	F9B-3027	09-45581	09-802B	01-43138	01-46794-08	09-0.2247.051	01-42424	01-42422-1	0.0144.200	01-42423	01-35137	0.3431.780	0.2234.337/ 0.2230.319	-
10-13026-10 Not in production	F9B-3607	09-45582	09-814B	01-43137	01-46794-02	09-0.2247.051	01-42424	01-42422-1	0.0144.200	01-42423	01-35137	0.3431.780	0.2234.337/ 0.2230.319	-
10-13026-11 Not in production	F9B-3637	09-45582	09-814B	01-43135	01-46794-02	09-0.2247.051	01-42424	01-42422-1	0.0144.200	01-42423	01-35137	0.3431.780	0.2234.337/ 0.2230.319	-
10-13026-12 Not in production	F9B-3627	09-45582	09-814B	01-43138	01-46794-08	09-0.2247.051	01-42424	01-42422-1	0.0144.200	01-42423	01-35137	0.3431.780	0.2234.337/ 0.2230.319	-
10-13027-63 Obsolete	F9B-5600	09-45582	09-814B	01-43137	01-46794-02	09-0.2247.051	01-42424	01-42422-1	0.0144.200	01-42423	01-35138	0.3431.780	0.2230.319	0.3454.001 = 12V 2xA 0.3454.002 = 24V 2xA 0.3454.003 = 12V 1xB 0.3454.004 = 24V 1xB
10-13027-98	F9B-5607	09-45582	09-814B	01-43137	01-46794-02	09-0.2247.051	01-42424	01-42422-1	0.0144.200	01-42423	01-35138	0.3431.780	0.2230.319	0.3454.001 = 12V 2xA 0.3454.002 = 24V 2xA 0.3454.003 = 12V 1xB 0.3454.004 = 24V 1xB

A - parts no. 1, 4, 5, 7 included ** - gasket included* *** - shaft drive end* **** - included in service kit* ***** - back* ****** - front*

Johnson Flexible Impeller Pumps

Part no.	Pump type	A Service kit	1 Impeller	2 Cam	3 Camscrew	4 Seal	5 Gasket	6 Endcover	7 Endcover screw	8 Wearplate	9 Shaft	10 Bearing	11 Bearing seal	Clutch or Motor
10-13027-99	F9B-5600	09-45582	09-814B	01-43137	01-46794-02	09-0.2247.051	01-42424	01-42422-1	0.0144.200	01-42423	01-35138	0.3431.780	0.2230.319	0.3454.001 = 12V 2xA 0.3454.002 = 24V 2xA 0.3454.003 = 12V 1xB 0.3454.004 = 24V 1xB
10-13064-1 Customer branded	F9B/F7B-9	09-46646-1	09-802B 09-1028B*	01-43137 01-42679	01-46794-02 01-46794-01	09-0.2247.051	01-42424 01-45758	-	0.0148.001	01-42423 01-42443	01-35214	0.3431.701	0.2233.016	-
10-13064-2	F9B/F7B-9	09-46646-1	09-802B 09-1028B*	01-43137 01-42679	01-46794-02 01-46794-01	09-0.2247.051	01-42424 01-45758	-	0.0148.001	01-42423 01-42443	01-35214	0.3431.701	0.2233.016	-
10-13080-01	F9B-9	09-45582	09-814B	01-45173	01-46794-09	09-0.2247.051	0.2173.459	01-45961	0.0138.134	01-42423	01-35276	0.3431.746	0.2233.002	-
10-13087-01 Obsolete, repl. by 10-13166-01	F9B-905	09-45582	09-814B	01-45018	01-46794-02	09-0.2247.051	01-42424	01-42422-1	0.0144.003	01-42423	01-35298	0.3431.486	0.2233.002	-
10-13088-01	F8B-9	09-45579	09-819B	01-42680	01-46794-02	09-0.2247.051	01-42424	01-42422-1	0.0144.200	01-42423	01-35294	0.3431.746	-	-
10-13088-02 Not in production	F8B-902	09-45579	09-819B	01-42755	01-46794-08	09-0.2247.051	01-42424	01-42422-1	0.0144.200	01-42423	01-35294	0.3431.746	-	-
10-13088-03	F8B-903	09-45579	09-819B	01-42425	01-46794-02	09-0.2247.051	01-42424	01-42422-1	0.0144.200	01-42423	01-35294	0.3431.746	-	-
10-13095-01	F9B-9	09-45582	09-814B	01-43137	01-46794-02	09-0.2247.051	01-42424	01-42422-1	0.0144.200	01-42423	01-35212	0.3431.684	0.2233.016	-
10-13095-02	F9B-9	09-45582	09-814B	01-43137	01-46794-02	09-0.2247.051	01-42424	01-42422-1	0.0144.200	01-42423	01-35212	0.3431.684	0.2233.016	-
10-13096-01	F8B-9	09-45579	09-819B	01-42680	01-46794-02	09-0.2247.051	01-42424	01-42422-1	0.0144.200	01-42423	01-35212	0.3431.684	0.2233.016	-
10-13096-02	F8B-9	09-45579	09-819B	01-42680	01-46794-02	09-0.2247.051	01-42424	01-42422-1	0.0144.200	01-42423	01-35212	0.3431.684	0.2233.016	-
10-13121-01	F95B-3000	09-46371	09-820B	01-35744	01-46794-09	09-0.2247.018	0.2172.142	01-35284-2	0.0138.134	01-42423	01-35694	0.3431.743/ 0.3431.043**	0.2233.008/ 0.2230.322	-
10-13121-02 Not in production	F95B-3030	09-46371	09-820B	Obsolete	01-46794-11	09-0.2247.018	01-45354	01-35284	0.0138.134	01-42423	01-35694	0.3431.743/ 0.3431.043**	0.2233.008/ 0.2230.322	-
10-13121-03 Not in production	F95B-3020	09-46371	09-820B	Obsolete	01-46794-11	09-0.2247.018	01-45354	01-35284	0.0138.134	01-42423	01-35694	0.3431.743/ 0.3431.043**	0.2233.008/ 0.2230.322	-
10-13121-04	F95B-3007	09-46371	09-820B	01-35744	01-46794-09	09-0.2247.018	0.2172.142	01-35284-2	0.0138.134	01-42423	01-35694	0.3431.743/ 0.3431.043**	0.2233.008/ 0.2230.322	-
10-13141-01 Customer branded	F75B-9	09-46365	09-821B	01-46146	01-46794-12	09-0.2247.008	01-46286	01-46285	01-46794-12	01-42443	01-35703	0.3431.001/ 0.3431.044	0.2233.351	-

A *- parts no. 1, 4, 5, 7 included* * *- gasket included* ** *- shaft drive end* *** *- included in service kit* **** *- back* ***** *- front*

Johnson Flexible Impeller Pumps

Part no.	Pump type	A Service kit	1 Impeller	2 Cam	3 Camscrew	4 Seal	5 Gasket	6 Endcover	7 Endcover screw	8 Wearplate	9 Shaft	10 Bearing	11 Bearing seal	Clutch or Motor
10-13141-02	F75B-9	09-46365	09-821B	01-46146	01-46794-12	09-0.2247.008	01-46286	01-46285	01-46794-12	01-42443	01-35703	0.3431.001/ 0.3431.044	0.2233.351	-
10-13142-01 Customer branded	F75B/F7B-9	09-46366	09-821B 09-1028B*	01-46146 01-42679	01-46794-12 01-46794-01	09-0.2247.008	01-46286 01-46362	-	0.0138.921	01-42443	01-35702	0.3431.001/ 0.3431.044	0.2233.351	-
10-13142-02	F75B/F7B-9	09-46366	09-821B 09-1028B*	01-46146 01-42679	01-46794-12 01-46794-01	09-0.2247.008	01-46286 01-46362	-	0.0138.921	01-42443	01-35702	0.3431.001/ 0.3431.044	0.2233.351	-
10-13143-98	F95B-5007	09-46371	09-820B	01-35744	01-46794-09	09-0.2247.018	0.2172.142	01-35284-2	0.0138.134	01-42423	01-35700	0.3431.743/ 0.3431.043**	0.2230.322	0.3454.001 = 12V 2xA 0.3454.002 = 24V 2xA 0.3454.003 = 12V 1xB 0.3454.004 = 24V 1xB
10-13143-99	F95B-5000	09-46371	09-820B	01-35744	01-46794-09	09-0.2247.018	0.2172.142	01-35284-2	0.0138.134	01-42423	01-35700	0.3431.743/ 0.3431.043**	0.2230.322	0.3454.001 = 12V 2xA 0.3454.002 = 24V 2xA 0.3454.003 = 12V 1xB 0.3454.004 = 24V 1xB
10-13145-01 Obsolete	F9B-9	-	09-802B	01-43137	01-46794-02	09-0.2247.051	0.2172.142	Cust.brand.	0.0138.134	01-42423	01-35870	0.3431.486	0.2234.001	
10-13153-01 Obsolete, repl. by 10-13265-01	F75B-9	09-46691	09-821B	01-46146	01-46794-12	09-0.2247.008	01-46286	Cust.brand.	01-46794-12	01-42443	01-35728	0.3431.665	0.2233.008	-
10-13159-01 Obsolete	F5B-905	-	09-1027B-1*	01-46474	01-46794-12	0.2233.001	01-46473	Cust.brand.	0.0141.502	-	-	0.3431.761	-	-
10-13159-02 Obsolete	F5B-905	-	09-1027B-1*	01-46474	01-46794-12	0.2233.001	01-46473	Cust.brand.	0.0141.502	-	-	0.3431.761	-	-
10-13159-03 Obsolete	F5B-905	-	09-1027B-1*	01-46474	01-46794-12	0.2233.001	01-46473	Cust.brand.	0.0141.502	-	-	0.3431.761	-	-
10-13159-04 Obsolete	F5B-905	-	09-1027B-1*	01-46474	01-46794-12	0.2233.001	01-46473	Cust.brand.	0.0141.502	-	-	0.3431.761	-	-

A *- parts no. 1, 4, 5, 7 included* * *- gasket included* ** *- shaft drive end* *** *- included in service kit* **** *- back* ***** *- front*

Johnson Flexible Impeller Pumps

Part no.	Pump type	A Service kit	1 Impeller	2 Cam	3 Camscrew	4 Seal	5 Gasket	6 Endcover	7 Endcover screw	8 Wearplate	9 Shaft	10 Bearing	11 Bearing seal	Clutch or Motor
10-13159-05 Obsolete	F5B-905	-	09-1027B-1*	01-46474	01-46794-12	0.2233.001	01-46473	Cust.brand.	0.0141.502	-	-	0.3431.761	-	-
10-13159-06 Obsolete	F5B-905	-	09-1027B-1*	01-46474	01-46794-12	0.2233.001	01-46473	Cust.brand.	0.0141.502	-	-	0.3431.761	-	-
10-13159-07 Customer branded	F5B-905	-	09-1027B-1*	01-46706	-	0.2233.001	0.2173.471	Cust.brand.	0.0141.502	-	01-46475	0.3431.761	-	
10-13159-08 Customer branded	F5B-905	-	09-1027B-1*	01-46706	-	0.2233.001	0.2173.471	Cust.brand.	0.0141.502	-	01-46475	0.3431.761	-	
10-13165-01 Customer branded	F95B-9	09-46599-1	09-820B	01-35744	01-46794-09	09-0.2247.018	0.2172.142	01-35773-2	0.0138.134	01-42423	01-35743	0.3428.516	0.2234.502	-
10-13165-02	F95B-9	09-46599-1	09-820B	01-35744	01-46794-09	09-0.2247.018	0.2172.142	01-35773-2	0.0138.134	01-42423	01-35743	0.3428.516	0.2234.502	
10-13166-01 Customer branded	F9B-905	09-45582	09-814B	01-45018	01-46794-02	09-0.2247.051	01-42424	01-42422-1	0.0144.003	01-42423	01-35742	0.3431.486	0.2233.002	-
10-13170-01 Customer branded	F75B-9	-	09-821B	01-46146	01-46794-12	09-0.2247.008	0.2173.493	01-46285	01-46794-12	01-42443	01-35771	0.3431.485	0.2233.008	-
10-13171-01 Customer branded	F9B-905	-	09-814B	01-45172	01-46794-09	09-0.2247.051	0.2172.142	01-42422-1	0.0138.134	01-46538	01-35833	0.3431.780	0.2230.319	-
10-13175-01	F8B-3000-TSS	09-45579	09-819B	01-42680	01-46794-02	09-0.2247.051	01-42424	01-42422-1	0.0144.200	01-42423	01-35137	0.3431.780	0.2230.319	-
10-13176-99	F8B-5000-TSS	09-45579	09-819B	01-42680	01-46794-02	09-0.2247.051	01-42424	01-42422-1	0.0144.200	01-42423	01-35138	0.3431.780	0.2234.337/ 0.2230.319	0.3454.001 = 12V 2xA 0.3454.002 = 24V 2xA 0.3454.003 = 12V 1xB 0.3454.004 = 24V 1xB
10-13177-01	F9B-3000-TSS	09-45581	09-802B	01-43137	01-46794-02	09-0.2247.051	01-42424	01-42422-1	0.0144.200	01-42423	01-35137	0.3431.780	0.2234.337/ 0.2230.319	-
10-13178-99	F9B-5600-TSS	09-45582	09-814B	01-43137	01-46794-02	09-0.2247.051	01-42424	01-42422-1	0.0144.200	01-42423	01-35137	0.3431.780	0.2230.319	0.3454.001 = 12V 2xA 0.3454.002 = 24V 2xA 0.3454.003 = 12V 1xB 0.3454.004 = 24V 1xB

A *- parts no. 1, 4, 5, 7 included* * *- gasket included* ** *- shaft drive end* *** *- included in service kit* **** *- back* ***** *- front*

Johnson Flexible Impeller Pumps

Part no.	Pump type	A Service kit	1 Impeller	2 Cam	3 Camscrew	4 Seal	5 Gasket	6 Endcover	7 Endcover screw	8 Wearplate	9 Shaft	10 Bearing	11 Bearing seal	Clutch or Motor
10-13180-01 Obsolete, repl. by 10-13263-01	F8B-9	09-46692	09-819B	01-42680	01-46794-02	09-0.2247.008	0.2172.142	01-42422-1	0.0138.134	01-42423	01-35796	0.3431.525	0.2234.010	-
10-13208-01 Customer branded	F6B-9	-	09-812B-1**	-	-	0.2233.001	0.2173.475	01-46556	0.0279.301	-	01-46669	0.3431.742	-	
10-13208-02 Customer branded	F6B-9	-	09-812B-1**	-	-	0.2233.001	0.2173.475	01-46556	0.0279.301	-	01-46669	0.3431.742	-	
10-13223-01 Obsolete	F5B-9	-	09-1027B-1*	-	-	0.2233.001	0.2173.476	-	0.0141.501	-	-	0.3431.753	-	
10-13223-02 Obsolete	F5B-9	-	09-1027B-1*	-	-	0.2233.001	0.2173.476	-	0.0141.501	-	-	0.3431.753	-	
10-13223-03 Obsolete	F5B-9	-	09-1027B-1*	-	-	0.2233.001	0.2173.476	-	0.0141.501	-	-	0.3431.753	-	
10-13223-04 Obsolete	F5B-9	-	09-1027B-1*	-	-	0.2233.001	0.2173.476	-	0.0141.501	-	-	0.3431.753	-	
10-13225-01	F9B-3000-VF	09-45581	09-802B	01-43137	01-46794-02	09-0.2247.051	0.2172.142	01-42422-3 (o-ring)	0.0144.200	01-42423	01-35137	0.3431.780	0.2234.337 ***	-
10-13226-99	F9B-5600-VF	09-45581	09-814B	01-43137	01-46794-02	09-0.2247.051	0.2172.142	01-42422-3	0.0144.200	01-42423	01-35138	0.3431.780	0.2230.319	0.3454.001 = 12V 2xA 0.3454.002 = 24V 2xA 0.3454.003 = 12V 1xB 0.3454.004 = 24V 1xB
10-13234-01 Customer branded	F8B-9	-	09-1029B	01-42680	01-46794-02	09-0.2247.051	01-42424	01-42422-1	0.0144.002	01-42423	01-35868	0.3431.684	0.2233.016	
10-13236-01 Obsolete	F5B-9	-	09-1027B-1*	-	-	0.2233.001	0.2173.476	-	0.0141.501	-	-	0.3431.753	-	
10-13236-02 Obsolete	F5B-9	-	09-1027B-1*	-	-	0.2233.001	0.2173.476	-	0.0141.501	-	-	0.3431.753	-	
10-13243-01 Customer branded	F95B-9	-	09-820B	01-35883	01-46794-09	09-0.2247.018	0.2172.142	01-35773-2	0.0138.134	01-46538	01-35872	0.3431.743 0.3431.043	0.2234.010	
10-13248-01 Customer branded	F95B-9	-	09-820B	01-35744	01-46794-09	09-0.2247.018	0.2172.142	01-35773-2	0.0138.134	01-46538	01-35892	0.3428.515 0.3431.745	0.2234.502	
10-13248-02 Customer branded	F95B-903	-	09-820B	01-35854	01-46794-09	09-0.2247.018	0.2172.142	01-35773-2	0.0138.134	01-46538	01-35892	0.3428.515 0.3431.745	0.2234.502	
10-13260-01 Customer branded	F8B-9	-	09-1029B	01-45771	01-46794-02	0.2233.250	01-45354	01-35284	0.0138.134	01-42423	01-46822	0.3431.780	0.2233.250	

A *- parts no. 1, 4, 5, 7 included* * *- gasket included* ** *- shaft drive end* *** *- included in service kit* **** *- back* ***** *- front*

Johnson Flexible Impeller Pumps

Part no.	Pump type	A Service kit	1 Impeller	2 Cam	3 Camscrew	4 Seal	5 Gasket	6 Endcover	7 Endcover screw	8 Wearplate	9 Shaft	10 Bearing	11 Bearing seal	Clutch or Motor
10-13263-01 Customer branded	F8B-9	-	09-819B	01-42680	01-46794-02	09-0.2247.008	0.2172.142	Cust. branded	0.0138.134	01-42423	01-35910	0.3431.525	0.2234.010	
10-13265-01 Obsolete, repl by 10-13306-01	F75B-9	-	09-821B	01-46146	01-46794-12	09-0.2247.008	01-46286	Cust. branded	0.0141.502	01-42443	01-35911	0.3431.030	0.2233.008	
10-13283-01	F5B-9	-	09-1027B-1*	-	-	0.2233.252	0.2173.475	Cust. branded	0.0141.502	01-46532-2	01-46896	0.3431.755	0.2234.015	
10-13283-1 Obsolete, repl by 10-13283-01	F5B-9	-	09-1027B-1*	-	-	0.2233.252	0.2173.475	Cust. branded	0.0141.502	01-46532-2	01-46896	0.3431.755	0.2234.015	
10-13286-01 Customer branded	F75B-9	-	09-821B	01-46146	01-46794-12	09-0.2247.008	0.2172.996	Cust. branded	0.0141.503	01-42443	01-35998	0.3431.485	0.2233.008	
10-13305-01 Customer branded	F8B-9	-	09-819B	01-42680	01-46794-02	09-0.2247.008	0.2172.142	Cust. branded	0.0138.134	01-42423	01-35910	0.3431.525	0.2234.010	
10-13306-01 Customer branded	F75B-9	-	09-821B	01-46146	01-46794-12	09-0.2247.008	01-46286	Cust. branded	0.0141.502	01-42443	01-35911	0.3431.030	0.2233.008	
10-13324-01 Customer branded, repl by 10-13353-01	F5B-9	-	09-1027B-1*	-	-	0.2233.001	0.2173.476	-	-	-	-	0.3431.753	-	
10-13324-02 Customer branded, repl by 10-13353-02	F5B-9	-	09-1027B-1*	-	-	0.2233.001	0.2173.476	-	-	-	-	0.3431.753	-	
10-13324-03 Customer branded, repl by 10-13353-03	F5B-9	-	09-1027B-1*	-	-	0.2233.001	0.2173.476	-	-	-	-	0.3431.753	-	
10-13324-04 Customer branded, repl by 10-13353-04	F5B-9	-	09-1027B-1*	-	-	0.2233.001	0.2173.476	-	-	-	-	0.3431.753	-	
10-13325-01 Customer branded, repl by 10-13354-01	F5B-9	-	09-1027B-1*	-	-	0.2233.001	0.2173.476	-	-	-	-	0.3431.753	-	
10-13325-02 Customer branded, repl by 10-13354-02	F5B-9	-	09-1027B-1*	-	-	0.2233.001	0.2173.476	-	-	-	-	0.3431.753	-	
10-13328-01 Customer branded	F5B-9	-	09-1027B-1*	-	-	09-0.2247.050	0.2173.475	01-46535	0.0138.987	01-46532	01-46531	0.3431.483	-	
10-13328-02 Customer branded	F5B-9	-	09-1027B-1*	-	-	09-0.2247.050	0.2173.475	01-46535	0.0138.987	01-46532	01-46531	0.3431.483	-	
10-13331-01 Customer branded, replaced by 0-13432-01	F6B-9	-	09-812B-1*-1*	-	-	0.2233.001	0.2173.475	01-36007	0.0141.503	-	-	0.3431.742	-	0.3431.749
10-13333-01 Customer branded	F6B-9	-	09-812B-1*-1*	01-46502	0.0279.033	09-0.2247.022	0.2173.475	01-46556	0.0141.502	01-42399-2	01-36010	0.3431.778	0.2233.405	

A *- parts no. 1, 4, 5, 7 included* * *- gasket included* ** *- shaft drive end* *** *- included in service kit* **** *- back* ***** *- front*

Johnson Flexible Impeller Pumps

Part no.	Pump type	A Service kit	1 Impeller	2 Cam	3 Camscrew	4 Seal	5 Gasket	6 Endcover	7 Endcover screw	8 Wearplate	9 Shaft	10 Bearing	11 Bearing seal	Clutch or Motor
10-13337-01 Customer branded	F4B-903	-	09-810B-1*	-	-	0.2233.010	0.2173.476	01-42398	0.0141.700	-	01-46541	0.3431.760 0.3431.748	-	
10-13338-01	F95B-9	-		01-35744	0.0252.189	09-0.2247.018	0.2172.142	01-35284-2	0.0138.134	01-42423	01-36018	0.3431.745 0.3428.515	-	
10-13344-01 Customer branded	F5B-905	-	09-1027B-1*	01-46706	0.0141.502	0.2233.001	01-46540	Cust.branded	0.0141.502	-	-	0.3431.761	-	
10-13345-01 Customer branded	F6B-9	-	09-812B-1*-1*	-		0.2233.001	0.2173.475	01-46556	0.0141.503	-	-	0.3431.742	-	
10-13353-01 Customer branded	F5B-9	-	09-1027B-1*	-	-	0.2233.001	0.2173.476	-	-	-	-	0.3431.753	-	
10-13353-02 Customer branded	F5B-9	-	09-1027B-1*	-	-	0.2233.001	0.2173.476	-	-	-	-	0.3431.753	-	
10-13353-03 Customer branded	F5B-9	-	09-1027B-1*	-	-	0.2233.001	0.2173.476	-	-	-	-	0.3431.753	-	
10-13353-04 Customer branded	F5B-9	-	09-1027B-1*	-	-	0.2233.001	0.2173.476	-	-	-	-	0.3431.753	-	
10-13354-01 Customer branded	F5B-9	-	09-1027B-1*	-	-	0.2233.001	0.2173.476	-	-	-	-	0.3431.753	-	
10-13354-02 Customer branded	F5B-9	-	09-1027B-1*	-	-	0.2233.001	0.2173.476	-	-	-	-	0.3431.753	-	
10-13356-01 Customer branded	F6B-9	-	09-812B-1*-1*	-	-	0.2233.001	0.2173.476	-	-	-	-	0.3431.753	-	
10-13356-03 Customer branded	F6B-9	-	09-812B-1*-1*	-	-	0.2233.001	0.2173.476	-	-	-	-	0.3431.753	-	
10-13356-04 Customer branded	F6B-9	-	09-812B-1*-1*	-	-	0.2233.001	0.2173.476	-	-	-	-	0.3431.753	-	
10-13357-01 Customer branded	F6B-9	-	09-812B-1*-1*	-	-	0.2233.001	0.2173.476	-	-	-	-	0.3431.753	-	
10-13374-01 Customer branded	F7B-9	-	09-1028B	-	-	09-0.2247.022	0.2172.012	-	-	-	-	0.3431.742	-	
10-13376-01 Customer Branded	F6B-9	-	09-812B-1*-1*	-	-	09-0.2247.022	0.2173.475	01-46556	0.0141.502	01-46969	01-46964	0.3431.778	0.2234.016	
10-13377-01 Customer Branded	F98B-9	-	09-842B???	01-36062	0.0252.189	09-0.2247.018	0.2172.142	01-35773-2	0.0138.134	01-42423	01-36061	0.3428.516	-	

A *- parts no. 1, 4, 5, 7 included* * *- gasket included* ** *- shaft drive end* *** *- included in service kit* **** *- back* ***** *- front*

Johnson Flexible Impeller Pumps

Part no.	Pump type	A Service kit	1 Impeller	2 Cam	3 Camscrew	4 Seal	5 Gasket	6 Endcover	7 Endcover screw	8 Wearplate	9 Shaft	10 Bearing	11 Bearing seal	Clutch or Motor
10-13392-01 Customer Branded	F5B-9	-	09-1027B-1*	01-45976	01-46794-05	0.2233.001	01-42401	01-46007	0.0279.500	01-42399	01-47217	0.3431.761	-	
10-13392-02 Customer Branded	F5B-9	-	09-1027B-1*	01-45976	01-46794-05	0.2233.001	01-42401	01-46007	0.0279.500	01-42399	01-47217	0.3431.761	-	
10-13432-01 Customer Branded	F6B-9	-	09-812B-1*-1*	-	-	0.2233.001	0.2173.475	Cust.branded	0.0141.503	-	-	0.3431.779 0.3431.742		
10-21876-1 Obsolete	F7B-9	09-45590	09-1028B*	01-42679	01-46794-07	09-0.2247.050	01-42400	01-42441	01-46794-05	01-42443	01-31964	0.3431.486	0.2233.002	
10-21876-2	F7B-903	09-45590	09-1028B*	01-42442	01-46794-07	09-0.2247.050	01-42400	01-42441	01-46794-05	01-42443	01-31964	0.3431.486	0.2233.002	
10-21915-1 Customer branded	F8B-903	09-45579	09-1029B	01-42425	01-46794-02	09-0.2247.051	01-42424	01-42422-1	0.0144.200	01-42423	01-32020	0.3431.486	0.2233.002	-
10-21915-2	F8B-903	09-45579	09-819B	01-42425	01-46794-02	09-0.2247.051	01-42424	01-42422-1	0.0144.200	01-42423	01-32020	0.3431.486	0.2233.002	-
10-22044-1 Obsolete, repl. by 10-24210-1	F5B-3	09-45583	09-1027B-1*	01-42397	01-46794-05	09-0.2247.050	01-42401	01-42398	01-46794-04	01-42399	Obsolete	0.3431.482	0.2233.001/ Obsolete	-
10-22044-2 Obsolete, repl. by 10-24210-3	F5B-302	09-45583	09-1027B-1*	01-45014	0.0279.032	09-0.2247.050	01-42401	01-42398	01-46794-04	01-42399	Obsolete	0.3431.482	0.2233.001/ Obsolete	-
10-22044-3 Obsolete, repl. by 10-24210-2	F5B-39	09-45584	09-1027B-9	01-42397	01-46794-05	09-0.2247.050	01-42401	01-42398	01-46794-04	01-42399	Obsolete	0.3431.482	0.2233.001/ Obsolete	-
10-22044-4 Obsolete, repl. by 10-24210-4	F5B-392	09-45584	09-1027B-9	01-45014	0.0279.032	09-0.2247.050	01-42401	01-42398	01-46794-04	01-42399	Obsolete	0.3431.482	0.2233.001/ Obsolete	-
10-22045-1 Obsolete, repl. by 10-24209-1	F7B-3	09-45590	09-1028B*	01-42679	01-46794-01	09-0.2247.050	01-42445	01-42441	01-46794-05	01-42443	Obsolete	0.3431.484	0.2233.001/ Obsolete	-
10-22045-2 Obsolete, repl. by 10-24209-2	F7B-39	09-45591	09-1028B-9	01-42679	01-46794-01	09-0.2247.050	01-42445	01-42441	01-46794-05	01-42443	Obsolete	0.3431.484	0.2233.001/ Obsolete	-
10-22045-3 Obsolete, repl. by 10-24209-3	F7B-303	09-45590		01-42442	01-46794-07	09-0.2247.050	01-42445	01-42441	01-46794-05	01-42443	Obsolete	0.3431.484	0.2233.001/ Obsolete	-
10-22045-4 Obsolete, repl. by 10-24209-4	F7B-393	09-45591	09-1028B-9	01-42442	01-46794-07	09-0.2247.050	01-42445	01-42441	01-46794-05	01-42443	Obsolete	0.3431.484	0.2233.001/ Obsolete	-
10-22047-1 Obsolete, repl. by 10-13024-1	F8B-3	09-45579	09-819B	01-42680	01-46794-02	09-0.2247.051	01-42424	01-42422-1	0.0144.003	01-42423	Obsolete	0.3431.486	0.2233.004/ 0.2233.002	-
10-22047-2 Obsolete, repl. by 10-13024-2	F8B-39	-	09-819B-9	01-42680	01-46794-02	09-0.2247.051	01-42424	01-42422-1	0.0144.003	01-42423	Obsolete	0.3431.486	0.2233.004/ 0.2233.002	-
10-22047-3 Obsolete, repl. by 10-13024-3	F8B-303	09-45579	09-819B	01-42425	01-46794-02	09-0.2247.051	01-42424	01-42422-1	0.0144.003	01-42423	Obsolete	0.3431.486	0.2233.004/ 0.2233.002	-

A *- parts no. 1, 4, 5, 7 included* * *- gasket included* ** *- shaft drive end* *** *- included in service kit* **** *- back* ***** *- front*

Johnson Flexible Impeller Pumps

Part no.	Pump type	A Service kit	1 Impeller	2 Cam	3 Camscrew	4 Seal	5 Gasket	6 Endcover	7 Endcover screw	8 Wearplate	9 Shaft	10 Bearing	11 Bearing seal	Clutch or Motor
10-22047-4 Obsolete, repl. by 10-13024-4	F8B-393	-	09-819B-9	01-42425	01-46794-02	09-0.2247.051	01-42424	01-42422-1	0.0144.003	01-42423	01-32185 Obsolete	0.3431.486	0.2233.004/ 0.2233.002	-
10-22054-1 Obsolete	F7B-3	09-45590	09-1028B*	01-42679	01-46794-01	09-0.2247.050	01-42445	01-42441	01-46794-05	01-42443	Obsolete	0.3431.484	0.2233.001	-
10-22055-1 Obsolete, repl. by 10-24074-1	F4B/6-M	-	09-1026B-1*	01-42389	01-46794-04	Obsolete	01-42391	01-42398	0.0279.501	-	Obsolete	-	-	-
10-22096-1	F8B-900	09-45579	09-819B	01-42680	01-46794-02	09-0.2247.051	01-42424	01-42422-1	0.0144.003	01-42423	01-32253	0.3431.486	0.2233.002	-
10-22096-2 Obsolete	F8B-903	09-45579	09-819B	01-42425	01-46794-02	09-0.2247.051	01-42424	01-42422-1	0.0144.003	01-42423	01-32253	0.3431.486	0.2233.002	-
10-22096-3	F8B-902	09-45579	09-819B	01-42755	01-46794-08	09-0.2247.051	01-42424	01-42422-1	0.0144.003	01-42423	01-32253	0.3431.486	0.2233.002	-
10-22139-1 Obsolete	F7B-903	09-45590	09-1028B*	01-42442	01-46794-07	09-0.2247.050	01-42445	01-42441	01-46794-05	01-42443	Obsolete	0.3431.523	Obsolete	-
10-22143-1 Obsolete, repl. by 10-24140-1	F5B-9	09-45583	09-1027B-1 *	01-42397	01-46794-05	09-0.2247.050	01-42401	01-42398	01-46794-04	01-42399	Obsolete	0.3431.484	0.2233.350	-
10-22143-2 Obsolete, repl. by 10-24140-2	F5B-902	09-45583	09-1027B-1 *	01-45014	0.0279.032	09-0.2247.050	01-42401	01-42398	01-46794-04	01-42399	Obsolete	0.3431.484	0.2233.350	-
10-22144-1 Obsolete	F7B-9	09-45590	09-1028B*	01-42679	01-46794-01	09-0.2247.050	01-42445	01-42441	01-46794-05	01-42443	Obsolete	0.3431.523	0.2233.350	-
10-22147-1 Obsolete	F7B-903	09-45590	09-1028B *	01-42442	01-46794-07	09-0.2247.050	01-42445	01-42441	01-46794-05	01-42443	01-31964	0.3431.486	0.2233.002	-
10-22160-1 Obsolete, repl. by 10-24074-1	F4B-4	-	09-1026B-1*	01-42389	01-46794-04	Obsolete	01-42391	01-42398	0.0279.501	-	Obsolete	0.3431.754	-	-
10-22162- Obsolete, repl. by 10-13025-	F8B-5	09-45579	09-819B	01-42680	01-46794-02	09-0.2247.051	01-42424	01-42422-1	0.0144.003	01-42423	Obsolete	0.3431.486	0.2234.337/ 0.2233.002	0.3454.001 = 12V 2xA 0.3454.002 = 24V 2xA 0.3454.003 = 12V 1xB 0.3454.004 = 24V 1xB
10-22335-2 Customer branded	F7B-903	09-45590	09-1028B*	01-42679	01-46794-07	09-0.2247.050	01-42445	01-42441	01-46794-05	01-42443	01-31964	0.3431.486	0.2233.002	-
10-22335-3	F7B-9	09-45590	09-1028B*	01-42679	01-46794-07	09-0.2247.050	01-42445	01-42441	01-46794-05	01-42443	01-31964	0.3431.486	0.2233.002	-
10-22335-4 Obsolete	F7B-903	09-45590	09-1028B*	01-42442	01-46794-07	09-0.2247.050	01-42445	01-42441	01-46794-05	01-42443	01-31964	0.3431.486	0.2233.002	-

A *- parts no. 1, 4, 5, 7 included* * *- gasket included* ** *- shaft drive end* *** *- included in service kit* **** *- back* ***** *- front*

Johnson Flexible Impeller Pumps

Part no.	Pump type	A Service kit	1 Impeller	2 Cam	3 Camscrew	4 Seal	5 Gasket	6 Endcover	7 Endcover screw	8 Wearplate	9 Shaft	10 Bearing	11 Bearing seal	Clutch or Motor
10-22342- Obsolete, repl. by 10-24116-	F7B-5	09-45590	09-1028B*	01-42679	01-46794-01	09-0.2247.050	01-42445	01-42441	01-46794-05	01-42443	Obsolete	0.3431.484	0.2233.001/ Obsolete	0.3454.001 = 12V 2xA 0.3454.002 = 24V 2xA 0.3454.003 = 12V 1xB 0.3454.004 = 24V 1xB
10-22346-1 Obsolete, repl. by 10-13026-1	F9B-3	09-45581	09-802B	01-43137	01-46794-02	09-0.2247.051	01-42424	01-42422-1	0.0144.003	01-42423	Obsolete	0.3431.486	0.2234.337/	- 0.2230.319
10-22346-2 Obsolete, repl. by 10-13026-2	F9B-303	09-45581	09-802B	01-43135	01-46794-02	09-0.2247.051	01-42424	01-42422-1	0.0144.003	01-42423	Obsolete	0.3431.486	0.2233.002	-
10-22352-1/2 Obsolete, repl. by 10-24182-1/-2	F3B-12/24V	09-45595	09-1052S-9*	Obsolete	0.0279.500	0.2233.007	01-43142	01-43141	0.0279.501	-	-	-	-	Obsolete
10-22353-1/2 Obsolete	F3P10-12/ 24V	-	09-1052S-9*	-	-	0.2233.007	Obsolete	Obsolete	0.0279.500	-	-	-	-	Obsolete
10-22354-1 Obsolete, repl. by 10-24139-1	F7B-9	09-45590	09-1028B*	01-42679	01-46794-01	09-0.2247.050	01-42445	01-42441	01-46794-05	01-42443	Obsolete	0.3431.484	0.2233.350	-
10-22354-2 Obsolete, repl. by 10-24139-2	F7B-903	09-45590	09-1028B*	01-42442	01-46794-07	09-0.2247.050	01-42445	01-42441	01-46794-05	01-42443	Obsolete	0.3431.484	0.2233.350	-
10-22355-1 Obsolete	F5B-9	09-45583	09-1027B-1*	01-42397	01-46794-05	09-0.2247.050	01-42401	01-42398	01-46794-04	01-42399	Obsolete	0.3431.484	0.2233.350	-
10-22355-2 Obsolete	F5B-902	09-45583	09-1027B-1*	01-45014	0.0279.032	09-0.2247.050	01-42401	01-42398	01-46794-04	01-42399	Obsolete	0.3431.484	0.2233.350	-
10-22362- Obsolete, repl. by 10-13027-	F9B-5	09-45581	09-802B	01-43137	01-46794-02	09-0.2247.051	01-42424	01-42422-1	0.0144.003	01-42423	Obsolete	0.3431.486	0.2234.337/ 0.2233.002	0.3454.001 = 12V 2xA 0.3454.002 = 24V 2xA 0.3454.003 = 12V 1xB 0.3454.004 = 24V 1xB
10-24001-1 Obsolete	C1B-12V	-	Obsolete	-	-	0.2233.007	Obsolete	Obsolete	0.0256.011	-	-	-	Obsolete	
10-24001-2 Obsolete	C1B-24V	-	Obsolete	-	-	0.2233.007	Obsolete	Obsolete	0.0256.011	-	-	-	Obsolete	
10-24002-1 Obsolete, repl. by 10-24188-1	F5B-12V	-	Obsolete	01-42397	01-46794-05	Obsolete	01-42401	01-43252	01-46794-04	01-42399	-	-	-	Obsolete

A *- parts no. 1, 4, 5, 7 included* * *- gasket included* ** *- shaft drive end* *** *- included in service kit* **** *- back* ***** *- front*

Johnson Flexible Impeller Pumps

Part no.	Pump type	A Service kit	1 Impeller	2 Cam	3 Camscrew	4 Seal	5 Gasket	6 Endcover	7 Endcover screw	8 Wearplate	9 Shaft	10 Bearing	11 Bearing seal	Clutch or Motor
10-24002-2 Obsolete, repl. by 10-24188-2	F5B-24V	-	Obsolete	01-42397	01-46794-05	Obsolete	01-42401	01-43252	01-46794-04	01-42399	-	-	-	Obsolete
10-24006-1 Customer branded	F9B-905	09-45582	09-814B	01-45172	01-46794-09	09-0.2247.051	0.2173.459	01-45961	0.0138.134	01-42423	01-32253	0.3431.486	0.2233.002	-
10-24006-2 Customer branded	F9B-903	09-45582	09-814B	01-45384	01-46794-09	09-0.2247.051	0.2173.459	01-45961	0.0138.134	01-42423	01-32253	0.3431.486	0.2233.002	-
10-24006-3 Obsolete	F9B-905	09-45582	09-814B	01-45172	01-46794-09	09-0.2247.051	0.2173.459	01-45961	0.0138.134	01-42423	01-32253	0.3431.486	0.2233.002	-
10-24006-4 Obsolete	F9B-903	09-45582	09-814B	01-45384	01-46794-09	09-0.2247.051	0.2173.459	01-45961	0.0138.134	01-42423	01-32253	0.3431.486	0.2233.002	-
10-24014-1	F7B-9000	-	09-1028B*	01-42679	01-46794-01	09-0.2247.003	01-42445	01-42441	0.0279.033	01-42443	01-45006	0.3431.203	0.2233.004/ 0.2233.011	-
10-24014-2 Obsolete	F7B-9001	-	09-1028B*	01-42679	01-46794-01	09-0.2247.003	01-42445	01-42441	0.0279.033	01-42443	01-45006	0.3431.203	0.2233.004/ 0.2233.011	-
10-24014-3 Obsolete	F7B-9002	-	09-1028B*	01-42679	01-46794-01	09-0.2247.003	01-42445	01-42441	0.0279.033	01-42443	Obsolete	0.3431.203	0.2233.004/ 0.2233.011	-
10-24014-4	F7B-9030	-	09-1028B*	01-42442	01-46794-07	09-0.2247.003	01-42445	01-42441	0.0279.033	01-42443	01-45006	0.3431.203	0.2233.004/ 0.2233.011	-
10-24014-5 Obsolete	F7B-9000	-	09-1028B*	01-42679	01-46794-01	09-0.2247.003	01-42445	01-42441	0.0279.033	01-42443	01-45006	0.3431.203	0.2233.004/ 0.2233.011	-
10-24014-6 Obsolete	F7B-9030	-	09-1028B*	01-42442	01-46794-07	09-0.2247.003	01-42445	01-42441	0.0279.033	01-42443	01-45006	0.3431.203	0.2233.004/ 0.2233.011	-
10-24014-7	F7B-9	-	09-1028B*	01-42679	01-46794-01	09-0.2247.003	01-42445	01-42441	0.0279.033	01-42443	01-45006	0.3431.203	0.2233.406/ 0.2233.011	
10-24015-1 Obsolete	F5B-9	09-45583	09-1027B-1*	01-42397	01-46794-05	09-0.2247.050	01-42401	01-42398	01-46794-04	01-42399	01-31927-2	0.3431.484	0.2234.482	-
10-24017-1 Customer branded	F7B-903	09-45590	09-1028B*	01-42679	01-46794-07	09-0.2247.050	01-42445	01-42441	01-46794-05	01-42443	01-31964	0.3431.486	0.2233.002	-
10-24017-2 Customer branded	F7B-903	09-45590	09-1028B*	01-42442	01-46794-07	09-0.2247.050	01-42445	01-42441	01-46794-05	01-42443	01-31964	0.3431.486	0.2233.002	-
10-24017-3	F7B-903	09-45590	09-1028B*	01-42679	01-46794-07	09-0.2247.050	01-42445	01-42441	01-46794-05	01-42443	01-31964	0.3431.486	0.2233.002	-
10-24017-4	F7B-903	09-45590	09-1028B*	01-42442	01-46794-07	09-0.2247.050	01-42445	01-42441	01-46794-05	01-42443	01-31964	0.3431.486	0.2233.002	-
10-24018-1 Obsolete	F4B/F4B-4	-	09-1026B-1*	01-42389	01-46794-04	Obsolete	01-42391	-	Obsolete	-	Obsolete	0.3431.754	-	Obsolete

A *- parts no. 1, 4, 5, 7 included* * *- gasket included* ** *- shaft drive end* *** *- included in service kit* **** *- back* ***** *- front*

Johnson Flexible Impeller Pumps

Part no.	Pump type	A Service kit	1 Impeller	2 Cam	3 Camscrew	4 Seal	5 Gasket	6 Endcover	7 Endcover screw	8 Wearplate	9 Shaft	10 Bearing	11 Bearing seal	Clutch or Motor
10-24018-2 Obsolete	F4B/F4B-4	-	09-1026B-1*	01-42389	01-46794-04	Obsolete	01-42391	-	Obsolete	-	Obsolete	0.3431.754	-	Obsolete
10-24020-1 Obsolete, repl. by 10-24017-1 (partly)	F7B-9	09-45590	09-1028B*	01-42679	01-46794-01	09-0.2247.050	01-42445	01-42441	01-46794-05	01-42443	01-31964	0.3431.486	0.2233.002	-
10-24020-2 Obsolete, repl. by 10-24017-2 (partly)	F7B-9	09-45590	09-1028B*	01-42442	01-46794-01	09-0.2247.050	01-42445	01-42441	01-46794-05	01-42443	01-31964	0.3431.486	0.2233.002	-
10-24026-1 Obsolete, repl. by 10-21915-1	F8B-903	09-45579	09-819B	01-42425	01-46794-02	09-0.2247.051	01-42424	01-42422-1	0.0144.200	01-42423	01-32020	0.3431.486	0.2233.002	-
10-24027-1 Obsolete, repl. by 10-21915-1	F8B-903	09-45579	09-819B	01-42425	01-46794-02	09-0.2247.051	01-42424	01-42422-1	0.0144.200	01-42423	01-32020	0.3431.486	0.2233.002	-
10-24028-1 Obsolete, repl. by 10-24017-2 (partly)	F7B-903	09-45590	09-1028B*	01-42442	01-46794-07	09-0.2247.050	01-42445	01-42422-1	01-46794-05	01-42443	01-31964	0.3431.486	0.2233.002	-
10-24035-1 Obsolete, repl. by 10-24119-1	F5B-9001	09-45585	09-1027B-1*	01-42397	01-46794-05	0.2233.001	01-42401	01-42398	0.0279.500	01-42399	Obsolete	Obsolete	0.2233.001 ***	-
10-24035-2 Obsolete, repl. by 10-24119-2	F5B-9002	09-45585	09-1027B-1*	01-42397	01-46794-05	0.2233.001	01-42401	01-42398	0.0279.500	01-42399	Obsolete	Obsolete	0.2233.001 ***	-
10-24035-3 Obsolete, repl. by 10-24119-3	F5B-9022	09-45585	09-1027B-1*	01-45014	0.0279.032	0.2233.001	01-42401	01-42398	0.0279.500	01-42399	Obsolete	Obsolete	0.2233.001 ***	-
10-24035-4 Obsolete, repl. by 10-24119-4	F5B-9003	09-45585	09-1027B-1*	01-42397	01-46794-05	0.2233.001	01-42401	01-42398	0.0279.500	01-42399	Obsolete	Obsolete	0.2233.001 ***	-
10-24035-5 Obsolete, repl. by 10-24119-5	F5B-9004	09-45585	09-1027B-1*	01-42397	01-46794-05	0.2233.001	01-42401	01-42398	0.0279.500	01-42399	Obsolete	Obsolete	0.2233.001 ***	-
10-24035-6 Obsolete, repl. by 10-24119-6	F5B-9005	09-45585	09-1027B-1*	01-42397	01-46794-05	0.2233.001	01-42401	01-42398	0.0279.500	01-42399	Obsolete	Obsolete	0.2233.001 ***	-
10-24047-1 Obsolete	F5B/F4B-9	-	09-1027B-1* 09-1026B-1*	01-45014 01-42397	01-46794-04 0.0279.032	09-0.2247.050	01-42401	-	Obsolete	01-42399	Obsolete	0.3431.482	0.2233.001	-
10-24048-1 Obsolete, repl. by 10-24017-4	F7B-903	09-45590	09-1028B *	01-42442	01-46794-07	09-0.2247.050	01-42445	01-42441	01-46794-05	01-42443	01-31964	0.3431.486	0.2233.002	-
10-24053-1 Obsolete, repl. by 10-24131-1	F5B-902	09-45583	09-1027B-1*	01-45014	0.0279.032	09-0.2247.050	01-42401	01-42398	01-46794-04	01-42399	Obsolete	0.3431.482	0.2233.001	-
10-24053-2 Obsolete, repl. by 10-24131-2	F5B-905	09-45583	09-1027B-1*	01-45199	0.0279.032	09-0.2247.050	01-42401	01-42398	01-46794-04	01-42399	Obsolete	0.3431.482	0.2233.001	-
10-24057-1 Obsolete, repl. by 10-22335-2 (partly)	F7B-903	09-45590	09-1028B*	01-42442	01-46794-07	09-0.2247.050	01-42445	01-42441	01-46794-05	01-42443	01-31964	0.3431.486	0.2233.002	-

A *- parts no. 1, 4, 5, 7 included* * *- gasket included* ** *- shaft drive end* *** *- included in service kit* **** *- back* ***** *- front*

Johnson Flexible Impeller Pumps

Part no.	Pump type	A Service kit	1 Impeller	2 Cam	3 Camscrew	4 Seal	5 Gasket	6 Endcover	7 Endcover screw	8 Wearplate	9 Shaft	10 Bearing	11 Bearing seal	Clutch or Motor
10-24061-1 Customer branded	F7B-9	09-45592	09-1028B*	01-42679	01-46794-07	0.2233.001	01-42445	01-42441	0.0141.502	-	01-45044	0.3431.483	0.2233.001 ***	-
10-24061-2 Customer branded	F7B-902	09-45592	09-1028B*	01-42584	01-46794-06	0.2233.001	01-42445	01-42441	0.0141.502	-	01-45044	0.3431.483	0.2233.001 ***	-
10-24061-3	F7B-9	09-45592	09-1028B*	01-42679	01-46794-07	0.2233.001	01-42445	01-42441	0.0141.502	-	01-45044	0.3431.483	0.2233.001 ***	-
10-24061-4 Obsolete	F7B-902	09-45592	09-1028B*	01-42584	01-46794-06	0.2233.001	01-42445	01-42441	0.0141.502	-	01-45044	0.3431.483	0.2233.001 ***	-
10-24070-1 Obsolete, repl by 10-24572-01	F7B-8	09-45592	09-1028B*	01-42679	01-46794-01	0.2233.001	01-42445	01-42441	0.0279.033	-	01-45045	0.3431.742	-	-
10-24070-2 Obsolete	F7B-89	09-45593	09-1028B-9	01-42679	01-46794-01	0.2233.001	01-42445	01-42441	0.0279.033	-	01-45045	0.3431.742	-	-
10-24070-3 Obsolete, repl by 10-24572-05	F7B-803	09-45592	09-1028B*	01-42442	01-46794-07	0.2233.001	01-42445	01-42441	0.0279.033	-	01-45045	0.3431.742	-	-
10-24070-4 Obsolete	F7B-893	09-45593	09-1028B-9	01-42442	01-46794-07	0.2233.001	01-42445	01-42441	0.0279.033	-	01-45045	0.3431.742	-	-
10-24070-5 Obsolete, repl. by 10-24572-51	F7B-8007	09-45592	09-1028B*	01-42679	01-46794-01	0.2233.001	01-42445	01-42441	0.0279.033	-	01-45045	0.3431.742	-	-
10-24070-6 Obsolete	F7B-8907	09-45593	09-1028B-9	01-42679	01-46794-01	0.2233.001	01-42445	01-42441	0.0279.033	-	01-45045	0.3431.742	-	-
10-24070-7 Obsolete	F7B-8037	09-45592	09-1028B*	01-42442	01-46794-07	0.2233.001	01-42445	01-42441	0.0279.033	-	01-45045	0.3431.742	-	-
10-24070-8 Obsolete	F7B-8937	09-45593	09-1028B-9	01-42442	01-46794-07	0.2233.001	01-42445	01-42441	0.0279.033	-	01-45045	0.3431.742	-	
10-24070-9 Obsolete	F7B-8	09-45592	09-1028B*	01-42679	01-46794-01	0.2233.001	01-42445	01-46005	0.0279.033	-	01-45045	0.3431.742	-	-
10-24070-10 Obsolete	F7B-8	09-45592	09-1028B*	01-42679	01-46794-01	0.2233.252	01-42445	01-46431	0.0279.033	-	01-45045	0.3431.742	-	-
10-24070-51 Obsolete	F7B-8007	09-45592	09-1028B*	01-42679	01-46794-01	0.2233.001	01-42445	01-42441	0.0279.033	-	01-46417	0.3431.742	-	-

A *- parts no. 1, 4, 5, 7 included* * *- gasket included* ** *- shaft drive end* *** *- included in service kit* **** *- back* ***** *- front*

Johnson Flexible Impeller Pumps

Part no.	Pump type	A Service kit	1 Impeller	2 Cam	3 Camscrew	4 Seal	5 Gasket	6 Endcover	7 Endcover screw	8 Wearplate	9 Shaft	10 Bearing	11 Bearing seal	Clutch or Motor
10-24071-98 Obsolete, repl by 10-24577-98	F7B-50017	09-45592	09-1028B*	01-42679	01-46794-01	0.2233.001	01-42445	01-45961	0.0279.033	01-42423	01-45076			0.3454.001 = 12V 2xA 0.3454.002 = 24V 2xA 0.3454.003 = 12V 1xB 0.3454.004 = 24V 1xB
10-24071-99 Obsolete, repl by 10-24577-99	F7B-5001	09-45592	09-1028B*	01-42679	01-46794-01	0.2233.001	01-42445	01-42441	0.0279.033	-	01-45076	0.3431.742	-	0.3454.001 = 12V 2xA 0.3454.002 = 24V 2xA 0.3454.003 = 12V 1xB 0.3454.004 = 24V 1xB
10-24072-1 Customer branded	F9B-9	09-45581	09-802B	01-45173	01-46794-09	09-0.2247.051	0.2173.459	01-45961	0.0138.134	01-42423	01-32253	0.3431.486	0.2233.002	-
10-24073-1 Obsolete, repl by 10-24571-01	F5B-8	09-45585	09-1027B-1*	01-42397	01-46794-05	0.2233.001	01-42401	01-42398	0.0279.300	-	01-45045	0.3431.742	-	-
10-24073-2 Obsolete, repl by 10-24571-03	F5B-802	09-45585	09-1027B-1*	01-45014	0.0279.032	0.2233.001	01-42401	01-42398	0.0279.300	-	01-45045	0.3431.742	-	-
10-24073-3 Obsolete, repl by 10-24571-02	F5B-89	09-45586	09-1027B-9	01-42397	01-46794-05	0.2233.001	01-42401	01-42398	0.0279.300	-	01-45045	0.3431.742	-	-
10-24073-4 Obsolete	F5B-892	09-45586	09-1027B-9	01-45014	0.0279.032	0.2233.001	01-42401	01-42398	0.0279.300	-	01-45045	0.3431.742	-	-
10-24073-5 Obsolete, repl by 10-24571-51	F5B-8007	09-45585	09-1027B-1*	01-42397	01-46794-05	0.2233.001	01-42401	01-42398	0.0279.300	-	01-45045	0.3431.742	-	-
10-24073-6 Obsolete	F5B-8027	09-45585	09-1027B-1*	01-45014	0.0279.032	0.2233.001	01-42401	01-42398	0.0279.300	-	01-45045	0.3431.742	-	-
10-24073-7 Obsolete	F5B-8907	09-45586	09-1027B-9	01-42397	01-42401	01-46794-05	0.2233.001	01-42398	0.0279.300	-	01-45045	0.3431.742	-	-
10-24073-8 Not in production Obsolete	F5B-8927	09-45586	09-1027B-9	01-45014	0.0279.032	0.2233.001	01-42401	01-42398	0.0279.300	-	01-45045	0.3431.742	-	-
10-24073-9 Obsolete	F5B-8	09-45585	09-1027B-1*	01-42397	01-46794-05	0.2233.001	01-42401	01-42398	0.0279.300	-	01-45045	0.3431.742	-	-
10-24073-10 Obsolete	F5B-8	09-45585	09-1027B-1*	01-42397	01-46794-05	0.2233.001	01-42401	01-42398	0.0279.300	-	01-46039	0.3431.742	-	-

A *- parts no. 1, 4, 5, 7 included* * *- gasket included* ** *- shaft drive end* *** *- included in service kit* **** *- back* ***** *- front*

Johnson Flexible Impeller Pumps

Part no.	Pump type	A Service kit	1 Impeller	2 Cam	3 Camscrew	4 Seal	5 Gasket	6 Endcover	7 Endcover screw	8 Wearplate	9 Shaft	10 Bearing	11 Bearing seal	Clutch or Motor
10-24073-11 Obsolete	F5B-802	09-45585	09-1027B-1*	01-45014	0.0279.032	0.2233.001	01-45933	01-42398	0.0279.300	-	01-45045	0.3431.742	-	-
10-24073-12 Obsolete	F5B-8	09-45585	09-1027B-1*	01-42397	01-46794-05	0.2233.252	01-42401	01-46624	0.0279.300	-	01-45045	0.3431.742	-	-
10-24073-51 Obsolete	F5B-8007	09-45585	09-1027B-1*	01-42397	01-46794-05	0.2233.001	01-42401	01-42398	0.0279.300	-	01-46417	0.3431.742	-	-
10-24074-1 Obsolete, repl by 10-24570-01	F4B-8	09-45587	09-810B-1*	01-42389	01-46794-04	0.2233.010	01-42391	01-42398	0.0279.300	-	01-45069	0.3431.748	-	-
10-24074-2 Obsolete, repl by 10-24570-02	F4B-89	09-45588	09-810B-9	01-42389	01-46794-04	0.2233.010	01-42391	01-42398	0.0279.300	-	01-45069	0.3431.748	-	-
10-24074-3 Obsolete	F4B-802	09-45587	09-810B-1*	01-45084	0.0279.501	0.2233.010	01-42391	01-42398	0.0279.300	-	01-45069	0.3431.748	-	-
10-24074-4 Obsolete	F4B-892	09-45588	09-810B-9	01-45084	0.0279.501	0.2233.010	01-42391	01-42398	0.0279.300	-	01-45069	0.3431.748	-	-
10-24074-5 Not in production Obsolete	F4B-803	09-45587	09-810B-1*	01-45288	01-46794-03	0.2233.010	01-42391	01-42398	0.0279.300	-	01-45069	0.3431.748	-	-
10-24074-6 Obsolete	F4B-893	09-45587	09-810B-9	01-45288	01-46794-03	0.2233.010	01-42391	01-42398	0.0279.300	-	01-45069	0.3431.748	-	-
10-24074-7 Obsolete, repl by 10-24570-07	F4B-8007	09-45587	09-810B-1*	01-42389	01-46794-04	0.2233.010	01-42391	01-42398	0.0279.300	-	01-45069	0.3431.748	-	-
10-24074-8 Obsolete	F4B-8907	09-45588	09-810B-9	01-42389	01-46794-04	0.2233.010	01-42391	01-42398	0.0279.300	-	01-45069	0.3431.748	-	-
10-24074-9 Obsolete	F4B-8027	09-45587	09-810B-1*	01-45084	0.0279.501	0.2233.010	01-42391	01-42398	0.0279.300	-	01-45069	0.3431.748	-	-
10-24074-10 Obsolete	F4B-8927	09-45588	09-810B-9	01-45084	0.0279.501	0.2233.010	01-42391	01-42398	0.0279.300	-	01-45069	0.3431.748	-	-
10-24074-11 Obsolete	F4B-8037	09-45587	09-810B-1*	01-45288	01-46794-03	0.2233.010	01-42391	01-42398	0.0279.300	-	01-45069	0.3431.748	-	-
10-24074-12 Obsolete	F4B-8937	09-45587	09-810B-9	01-45288	01-46794-03	0.2233.010	01-42391	01-42398	0.0279.300	-	01-45069	0.3431.748	-	-
10-24074-13 Obsolete	F4B-8	09-45587	09-810B-1*	01-42389	01-46794-04	0.2233.010	01-42391	01-46007	0.0279.300	-	01-45069	0.3431.748	-	-
10-24074-14 Obsolete	F4B-8	09-45587	09-810B-1*	01-42389	01-46794-04	0.2233.251	01-42391	01-46624	0.0279.300	-	01-45069	0.3431.748	-	-

A *- parts no. 1, 4, 5, 7 included* * *- gasket included* ** *- shaft drive end* *** *- included in service kit* **** *- back* ***** *- front*

Johnson Flexible Impeller Pumps

Part no.	Pump type	A Service kit	1 Impeller	2 Cam	3 Camscrew	4 Seal	5 Gasket	6 Endcover	7 Endcover screw	8 Wearplate	9 Shaft	10 Bearing	11 Bearing seal	Clutch or Motor
10-24074-71 Obsolete, repl by 10-24570-51	F4B-8007	09-45587	09-810B-1*	01-42389	01-46794-04	0.2233.010	01-42391	01-42398	0.0279.300	-	01-46416	0.3431.748	-	-
10-24076-1 Obsolete, repl. by 10-24228-1	F5B-9	-	09-1027B-1*	01-45329	0.0279.033	Obsolete	01-45315	01-45312-1	01-46794-12	-	Obsolete	0.3431.754	-	-
10-24085-1 Obsolete	F5B-9	09-45583	09-1027B-1*	01-42397	01-46794-05	09-0.2247.050	01-42401	01-42398	01-46794-04	01-42399	Obsolete	0.3431.778	0.2233.001	-
10-24086-1 Obsolete, repl. by 10-24184-1	F4B-9	09-45585	09-1027B-1*	01-42397	01-46794-05	0.2233.001	01-42401	01-42398	0.0279.500	01-42399	Obsolete	Obsolete	0.2233.001 ***	-
10-24090-1	F9B-900	09-45581	09-802B	01-43137	01-46794-02	09-0.2247.051	01-42424	01-42422-1	0.0144.003	01-42423	01-32020	0.3431.486	0.2233.002	-
10-24090-2 Not in production	F9B-903	09-45581	09-802B	01-43135	01-46794-02	09-0.2247.051	01-42424	01-42422-1	0.0144.003	01-42423	01-32020	0.3431.486	0.2233.002	-
10-24091-1 Obsolete	F8B-900	09-45579	09-819B	01-42680	01-46794-02	09-0.2247.051	01-42424	01-42422-1	0.0144.003	01-42423	01-32020	0.3431.486	0.2233.002	-
10-24091-2 Obsolete	F8B-903	09-45579	09-819B	01-42425	01-46794-02	09-0.2247.051	01-42424	01-42422-1	0.0144.003	01-42423	01-32020	0.3431.486	0.2233.002	-
10-24091-3 Obsolete	F8B-902	09-45579	09-819B	01-42755	01-46794-08	09-0.2247.051	01-42424	01-42422-1	0.0144.003	01-42423	01-32020	0.3431.486	0.2233.002	-
10-24095-1 Obsolete, repl. by 10-24074-1 + 10-24165-2	F4B/F4B-8	-	09-810B-1*	01-45288	01-46794-03	0.2233.010	01-42391	-	Obsolete	-	Obsolete	0.3431.748	-	-
10-24096-1 Obsolete	F8B-900	09-45579	09-819B	01-42680	01-46794-02	09-0.2247.051	01-42424	01-42422-1	0.0144.200	01-42423	01-32020	0.3431.746	0.2233.002	-
10-24096-2 Obsolete	F8B-903	09-45579	09-819B	01-42425	01-46794-02	09-0.2247.051	01-42424	01-42422-1	0.0144.200	01-42423	01-32020	0.3431.746	0.2233.002	-
10-24096-3 Obsolete	F8B-902	09-45579	09-819B	01-42755	01-46794-08	09-0.2247.051	01-42424	01-42422-1	0.0144.200	01-42423	01-32020	0.3431.746	0.2233.002	-
10-24096-4	F8B-902	-	09-819B	01-42755	01-46794-08	09-0.2247.051	01-42424	01-42422-1	0.0144.200	01-42423	01-32020	0.3431.746	0.2233.002	-
10-24097-1 Obsolete, repl. by 10-35098-2 + 10-24166-1	F4B/F4B-9	-	09-1026B-1*	01-42389	01-46794-04	0.2233.005 0.2233.200	01-42391	-	-	-	Obsolete	-	-	-
10-24097-2 Obsolete, repl. by 10-35098-2 + 10-24166-1	F4B/F4B-9	-	09-1026B-1*	01-42389	01-46794-04 09-1026B-1*	0.2233.005 0.2233.200	01-42391	-	-	-	Obsolete	-	-	-
10-24099-1 Obsolete, repl. by 10-24074-1	F4B-8001	09-45587	09-810B-1*	01-42389	01-46794-04	0.2233.010	01-42391	01-42398	0.0279.501	-	Obsolete	0.3431.748	-	-

A *- parts no. 1, 4, 5, 7 included* * *- gasket included* ** *- shaft drive end* *** *- included in service kit* **** *- back* ***** *- front*

Johnson Flexible Impeller Pumps

Part no.	Pump type	A Service kit	1 Impeller	2 Cam	3 Camscrew	4 Seal	5 Gasket	6 Endcover	7 Endcover screw	8 Wearplate	9 Shaft	10 Bearing	11 Bearing seal	Clutch or Motor
10-24099-2 Obsolete, repl. by 10-24074-3	F4B-8021	09-45587	09-810B-1*	01-45084	0.0279.501	0.2233.010	01-42391	01-42398	0.0279.501	-	Obsolete	0.3431.748	-	-
10-24099-3 Obsolete, repl. by 10-24074-5	F4B-8031	09-45587	09-810B-1*	01-45288	01-46794-03	0.2233.010	01-42391	01-42398	0.0279.501	-	Obsolete	0.3431.748	-	-
10-24100-1	F5B-9	09-45585	09-1027B-1*	01-42397	01-46794-05	0.2233.001	01-42401	01-42398	0.0279.500	01-42399	01-45131	0.3431.204	0.2234.005	-
10-24103-1 Obsolete	F7B-9	09-45590	09-1028B*	01-42679	01-46794-01	09-0.2247.050	01-42445	01-42441	01-46794-05	01-42443	Obsolete	0.3431.484	0.2233.350	-
10-24103-2 Obsolete	F7B-903	09-45590	09-1028B*	01-42442	01-46794-07	09-0.2247.050	01-42445	01-42441	01-46794-05	01-42443	Obsolete	0.3431.484	0.2233.350	-
10-24112- Obsolete	F5B-5000	09-45583	09-1027B-1*	01-42397	01-46794-05	09-0.2247.050	01-42401	01-42398	01-46794-04	01-42399	01-35084	0.3431.778	0.2230.015	0.3454.001 = 12V 2xA 0.3454.002 = 24V 2xA 0.3454.003 = 12V 1xB 0.3454.004 = 24V 1xB
10-24113-1 Obsolete	F5B-8001	09-45585	09-1027B-1*	01-42397	01-46794-05	0.2233.001	01-42401	01-42398	0.0279.500	-	01-45045	0.3431.742	-	-
10-24114-1 Obsolete	F7B-8001	09-45592	09-1028B*	01-42679	01-46794-01	0.2233.001	01-42445	01-42441	0.0279.033	-	01-45045	0.3431.742	-	-
10-24116-98	F7B-5007	09-45590	09-1028B*	01-42679	01-46794-01	09-0.2247.050	01-42445	01-42441	01-46794-05	01-42443	01-35084	0.3431.778	0.2230.015	
10-24116-99	F7B-5000	09-45590	09-1028B*	01-42679	01-46794-01	09-0.2247.050	01-42445	01-42441	01-46794-05	01-42443	01-35084	0.3431.778	0.2230.015	0.3454.001 = 12V 2xA 0.3454.002 = 24V 2xA 0.3454.003 = 12V 1xB 0.3454.004 = 24V 1xB
10-24119-1	F5B-9001	09-45585	09-1027B-1*	01-42397	01-46794-05	0.2233.001	01-42401	01-42398	0.0279.501	01-42399	01-45187	0.3431.761	-	-
10-24119-2	F5B-9002	09-45585	09-1027B-1*	01-42397	01-46794-05	0.2233.001	01-42401	01-42398	0.0279.501	01-42399	01-45187	0.3431.761	-	-
10-24119-3 Obsolete	F5B-9022	09-45585	09-1027B-1*	01-45014	0.0279.032	0.2233.001	01-42401	01-42398	0.0279.501	01-42399	01-45187	0.3431.761	-	-
10-24119-4	F5B-9003	09-45585	09-1027B-1*	01-42397	01-46794-05	0.2233.001	01-42401	01-42398	0.0279.501	01-42399	01-45187	0.3431.761	-	-
10-24119-5	F5B-9004	09-45585	09-1027B-1*	01-42397	01-46794-05	0.2233.001	01-42401	01-42398	0.0279.501	01-42399	01-45187	0.3431.761	-	-

A *- parts no. 1, 4, 5, 7 included* * *- gasket included* ** *- shaft drive end* *** *- included in service kit* **** *- back* ***** *- front*

Johnson Flexible Impeller Pumps

Part no.	Pump type	A Service kit	1 Impeller	2 Cam	3 Camscrew	4 Seal	5 Gasket	6 Endcover	7 Endcover screw	8 Wearplate	9 Shaft	10 Bearing	11 Bearing seal	Clutch or Motor
10-24119-6	F5B-9005	09-45585	09-1027B-1*	01-42397	01-46794-05	0.2233.001	01-42401	01-42398	0.0279.501	01-42399	01-45187	0.3431.761	-	-
10-24119-7	F5B-9006	09-45585	09-1027B-1*	01-42397	01-46794-05	0.2233.001	01-42401	01-42398	0.0279.501	01-42399	01-45187	0.3431.761	-	-
10-24119-8 Obsolete	F5B-9007	09-45585	09-1027B-1*	01-42397	01-46794-05	0.2233.001	01-42401	01-42398	0.0279.501	01-42399	01-45187	0.3431.761	-	-
10-24123-1/-2 Obsolete, repl. by 10-24182-1/-2	F3B-12V	09-45595	09-1052S-9*	Obsolete	0.0279.500	0.2233.007	01-43142	01-43141	0.0279.501	-	-	-	-	Obsolete
10-24124-1 Obsolete, repl. by 10-35098-2 + 10-24166-1	F4B/F4B-9	09-45891	09-1026B-1*	01-42389	01-46794-04	0.2233.005 0.2233.010	01-42391	01-42398	0.0279.501	-	Obsolete	Obsolete	-	-
10-24124-2 Obsolete, repl. by 10-35098-2 + 10-24166-1	F4B/F4B-9	09-45891	09-1026B-1*	01-42389	01-46794-04	0.2233.005 0.2233.010	01-42391	01-42398	0.0279.501	-	Obsolete	Obsolete	-	-
10-24124-3 Obsolete, repl. by 10-35098-2 + 10-24166-1	F4B/F4B-9	09-45891	09-1026B-1*	01-42389	01-46794-04	0.2233.005 0.2233.010	01-45401	01-42398	0.0279.501	-	Obsolete	Obsolete	-	-
10-24124-4 Obsolete, repl. by 10-35098-2 + 10-24166-1	F4B/F4B-9	09-45891	09-1026B-1*	01-42389	01-46794-04	0.2233.005 0.2233.010	01-45401	01-42398	0.0279.501	-	Obsolete	Obsolete	-	-
10-24124-5 Obsolete, repl. by 10-35098-2 + 10-24166-1	F4B/F4B-9	09-45891	09-1026B-1*	01-42389	01-46794-04	0.2233.005 0.2233.010	01-42391	01-42398	0.0279.501	-	Obsolete	Obsolete	-	-
10-24124-6 Obsolete, repl. by 10-35098-2 + 10-24166-1	F4B/F4B-9	09-45891	09-1026B-1*	01-42389	01-46794-04	0.2233.005 0.2233.010	01-42391	01-42398	0.0279.501	-	Obsolete	Obsolete	-	-
10-24126-1 Obsolete	F7B-903	09-45592	09-1028B*	01-42442	01-46794-07	0.2233.001	01-42445	01-42441	0.0279.033	-	01-45044	0.3431.483	0.2233.001 ***	-
10-24126-2 Obsolete	F7B-9	09-45592	09-1028B*	01-42679	01-46794-01	0.2233.001	01-42445	01-42441	0.0279.033	-	01-45044	0.3431.742	0.2233.001 ***	-
10-24126-3 Obsolete	F7B-903	09-45592	09-1028B*	01-42442	01-46794-07	0.2233.001	01-42445	01-42441	0.0279.033	-	01-46469	0.3431.742	-	-
10-24127-1	F7B-9	09-45592	09-1028B*	01-42679	01-46794-01	0.2233.001	01-42445	01-42441	0.0279.033	-	01-45248	0.3431.483	0.2233.001 ***	-
10-24127-2 Not in production	F7B-903	09-45592	09-1028B*	01-42442	01-46794-07	0.2233.001	01-42445	01-42441	0.0279.033	-	01-45248	0.3431.483	0.2233.001 ***	-
10-24127-3 Not in production	F7B-902	09-45592	09-1028B*	01-42584	01-46794-06	0.2233.001	01-42445	01-42441	0.0279.033	-	01-45248	0.3431.483	0.2233.001 ***	-
10-24130-2 Customer branded	F8B-905	-	09-1029B	01-45317	01-46794-02	0.2233.250	01-45354	01-42422-1	0.0138.134	01-42423	01-45316	0.3431.780		-
10-24130-3	F8B-905	09-45705	09-819B	01-45317	01-46794-02	0.2233.250	01-45354	01-42422-1	0.0138.134	01-42423	01-45316	0.3431.780	-	-

A *- parts no. 1, 4, 5, 7 included* * *- gasket included* ** *- shaft drive end* *** *- included in service kit* **** *- back* ***** *- front*

Johnson Flexible Impeller Pumps

Part no.	Pump type	A Service kit	1 Impeller	2 Cam	3 Camscrew	4 Seal	5 Gasket	6 Endcover	7 Endcover screw	8 Wearplate	9 Shaft	10 Bearing	11 Bearing seal	Clutch or Motor
10-24131-1	F5B-902	09-45585	09-1027B-1*	01-45014	0.0279.032	0.2233.001	01-42401	01-42398	0.0279.500	01-42399	01-45320	0.3431.483	0.2233.001 ***	-
10-24131-2	F5B-905	09-45585	09-1027B-1*	01-45199	0.0279.032	0.2233.001	01-42401	01-42398	0.0279.500	01-42399	01-45320	0.3431.483	0.2233.001 ***	-
10-24131-3 Not in production	F5B-902	09-45585	09-1027B-1*	01-45014	0.0279.032	0.2233.001	01-42401	01-42398	0.0279.500	01-42399	01-45320	0.3431.483	0.2233.001 ***	-
10-24131-4 Customer branded	F5B-905	09-45585	09-1027B-1*	01-45199	0.0279.032	0.2233.001	01-42401	01-42398	0.0279.500	01-42399	01-45320	0.3431.483	0.2233.001 ***	-
10-24135-1/-2 Obsolete, repl. by 10-24240-1/-2	T50-12V	-	Obsolete	-	-	Obsolete	-	Obsolete	-	-	-	-	-	Obsolete
10-24139-1	F7B-9	09-45590	09-1028B*	01-42679	01-46794-01	09-0.2247.050	01-42445	01-42441	01-46794-05	01-42443	01-45324	0.3431.484	0.2233.350	-
10-24139-2	F7B-903	09-45590	09-1028B*	01-42442	01-46794-07	09-0.2247.050	01-42445	01-42441	01-46794-05	01-42443	01-45324	0.3431.484	0.2233.350	-
10-24139-3	F7B-9	09-45590	09-1028B*	01-42679	01-46794-01	09-0.2247.050	01-42445	01-42441	01-46794-05	01-42443	01-45324	0.3431.484	0.2233.350	-
10-24139-4	F7B-903	09-45590	09-1028B*	01-42442	01-46794-07	09-0.2247.050	01-42445	01-42441	01-46794-05	01-42443	01-45324	0.3431.484	0.2233.350	-
10-24139-5	F7B-9	09-45590	09-1028B*	01-42679	01-46794-01	09-0.2247.050	01-42445	01-42441	01-46794-05	01-42443	01-45324	0.3431.484	0.2233.350	-
10-24139-7	F7B-9	09-45590	09-1028B*	01-42679	01-46794-01	09-0.2247.050	01-42445	01-42441	01-46794-05	01-42443	01-45324	0.3431.484	0.2233.350	-
10-24140-1	F5B-9	09-45583	09-1027B-1*	01-42397	01-46794-05	09-0.2247.050	01-42401	01-42398	01-46794-04	01-42399	01-45324	0.3431.484	0.2233.350	-
10-24140-2 Not in production	F5B-902	09-45583	09-1027B-1*	01-45014	0.0279.032	09-0.2247.050	01-42401	01-42398	01-46794-04	01-42399	01-45324	0.3431.484	0.2233.350	-
10-24140-3	F5B-9	09-45583	09-1027B-1*	01-42397	01-46794-05	09-0.2247.050	01-42401	01-42398	01-46794-04	01-42399	01-45324	0.3431.484	0.2233.350	-
10-24140-4 Not in production	F5B-902	09-45583	09-1027B-1*	01-45014	0.0279.032	09-0.2247.050	01-42401	01-42398	01-46794-04	01-42399	01-45324	0.3431.484	0.2233.350	-
10-24140-5	F5B-9	09-45583	09-1027B-1*	01-42397	01-46794-05	09-0.2247.050	01-42401	01-42398	01-46794-04	01-42399	01-45324	0.3431.484	0.2233.350	-
10-24143-1	F35B-902	09-45900	09-808B-1*	01-42415	01-46794-10	0.2233.200	01-43240	01-45359	0.0141.500	01-45087	01-45360	01-45110	-	-
10-24143-2	F35B-902	09-45900	09-808B-1*	01-42415	01-46794-10	0.2233.200	01-45400	01-45359	0.0141.500	01-45087	01-45360	01-45110	-	-
10-24143-3	F35B-9	09-45900	09-808B-1*	01-42910	01-46794-03	0.2233.200	01-43240	01-45359	0.0141.500	01-45087	01-45360	01-45110	-	-
10-24143-4 Not in production	F35B-9	09-45900	09-808B * 09-808B-1*	01-42910	01-46794-03	0.2233.200	01-45400	01-45359	0.0141.500	01-45087	01-45360	01-45110	-	-
10-24143-5	F35B-9	09-45900	09-808B-1*	01-42910	01-46794-03	0.2233.200	01-43240	01-45359	0.0141.500	01-45087	01-45360	01-45110	-	-

A *- parts no. 1, 4, 5, 7 included* * *- gasket included* ** *- shaft drive end* *** *- included in service kit* **** *- back* ***** *- front*

Johnson Flexible Impeller Pumps

Part no.	Pump type	A Service kit	1 Impeller	2 Cam	3 Camscrew	4 Seal	5 Gasket	6 Endcover	7 Endcover screw	8 Wearplate	9 Shaft	10 Bearing	11 Bearing seal	Clutch or Motor
10-24144-1	F4B-9	09-45587	09-810B-1*	01-42389	01-46794-04	0.2233.010	01-42391	01-42388-2	0.0141.500	-	01-45313	01-45207-3	-	-
10-24144-2	F4B-9	09-45587	09-810B-1*	01-42389	01-46794-04	0.2233.010	01-45401	01-42388-2	0.0141.500	-	01-45313	01-45207-3	-	-
10-24159-1 Obsolete	F9B-9	09-45920	09-814B	01-45173	01-46794-09	09-0.2247.008	01-42424	01-42422-1	0.0138.134	01-42423	01-35140	0.3431.684	0.2234.006	-
10-24159-2 Obsolete	F9B-905	09-45920	09-814B	01-45172	01-46794-09	09-0.2247.008	01-42424	01-42422-1	0.0138.134	01-42423	01-35140	0.3431.684	0.2234.006	-
10-24160-1 Customer branded	F8B-5	-	09-1029B	01-42680	01-46794-02	09-0.2247.051	01-42424	01-42422-1	0.0144.200	01-42423	01-35138	0.3431.780	0.2230.319	-
10-24160-2 Customer branded	F8B-5	-	09-1029B	01-42680	01-46794-02	09-0.2247.051	01-42424	01-42422-1	0.0144.200	01-42423	01-35138	0.3431.780	0.2230.319	-
10-24161-1 Customer branded	F9B-5	-	09-814B	01-43137	01-46794-02	09-0.2247.051	01-42424	01-42422-1	0.0144.200	01-42423	01-35138	0.3431.780	0.2230.319	
10-24164-1 Obsolete	F4B-8	09-45587	09-810B-1*	01-42389	01-46794-04	0.2233.010	01-42391	01-42388-2	0.0141.500	-	01-45313	01-45207-3	-	-
10-24164-2 Obsolete	F4B-8	09-45587	09-810B-1*	01-42389	01-46794-04	0.2233.010	01-45401	01-42388-2	0.0141.500	-	01-45313	01-45207-3	-	-
10-24165-1 Obsolete	F4B-9	-	09-810B-1*	01-42389	01-46794-04	-	01-42391	01-42388-2	0.0141.500	-	01-45313	01-45207-3	-	-
10-24165-2	F4B-903	-	09-810B-1*	01-45288	01-46794-03	-	01-42391	01-42388-2	0.0141.500	-	01-45313	01-45207-3	-	-
10-24166-1	F4B-9	-	09-810B-1*	01-42389	01-46794-04	-	01-42391	01-42388-2	0.0141.500	-	01-45313	01-45207-3	-	-
10-24166-2	F4B-903	-	09-810B-1*	01-45288	01-46794-03	-	01-42391	01-42388-2	0.0141.500	-	01-45313	01-45207-3	-	-
10-24167-1 Obsolete, repl. By 10-35098-2 + 10-24166-1	F4B/F4B-9	-	09-1026B-1*	01-42389	01-46794-04	0.2233.005	01-42391	01-42398	0.0279.501	-	Obsolete	Obsolete	-	-
10-24167-2 Obsolete, repl. By 10-35098-2 + 10-24166-1	F4B/F4B-9	-	09-1026B-1*	01-42389	01-46794-04	0.2233.005	01-42391	01-42398	0.0279.501	-	Obsolete	Obsolete	-	-
10-24174-1 Obsolete, repl. by 10-24225-1	F5B-9	Obsolete	09-1027B-1*	01-45329	0.0279.033	Obsolete	01-45315	01-45312-1	0.0141.502	-	Obsolete	0.3431.754	-	-
10-24178-1 Customer branded	F35B-902	09-45589	09-808B-1*	01-42415	01-46794-10	0.2233.010	01-43240	01-43239	0.0279.501	01-45087	01-45543	0.3431.441	0.2233.010 ***	-
10-24178-2 Obsolete, repl. by 10-24707-01	F35B-902	09-45589	09-808B-1*	01-42415	01-46794-10	0.2233.010	01-43240	01-43239	0.0279.501	01-45087	01-45543	0.3431.441	0.2233.010 ***	-

A *- parts no. 1, 4, 5, 7 included* * *- gasket included* ** *- shaft drive end* *** *- included in service kit* **** *- back* ***** *- front*

Johnson Flexible Impeller Pumps

Part no.	Pump type	A Service kit	1 Impeller	2 Cam	3 Camscrew	4 Seal	5 Gasket	6 Endcover	7 Endcover screw	8 Wearplate	9 Shaft	10 Bearing	11 Bearing seal	Clutch or Motor
10-24178-3 Customer branded	F35B-9	09-45589	09-808B-1*	01-42910	01-46794-03	0.2233.010	01-43240	01-43239	0.0279.501	01-45087	01-45543	0.3431.441	0.2233.010 ***	-
10-24179-1	F7B-9	09-45592	09-1028B*	01-42679	01-46794-01	0.2233.001	01-42445	01-42441	0.0141.502	-	01-45573	0.3431.483	0.2233.001 ***	-
10-24179-2	F7B-903	09-45592	09-1028B*	01-42442	01-46794-07	0.2233.001	01-42445	01-42441	0.0141.502	-	01-45573	0.3431.483	0.2233.001 ***	-
10-24180-1	F2P10-19 12V	09-45594	09-1077B-9*	-	-	0.2233.402	0.2172.506	21-4945	0.0140.001	21-4944**** 21-4946*****	-	-	-	01-35285-01
10-24180-2	F2P10-19 24V	09-45594	09-1077B-9*	-	-	0.2233.402	0.2172.506	21-4945	0.0140.001	21-4944**** 21-4946*****	-	-	-	01-35285-02
10-24180-3	F2P10-19 12V USA	09-45594	09-1077B-9*	-	-	0.2233.402	0.2172.506	21-4945	0.0140.001	21-4944**** 21-4946*****	-	-	-	01-35285-01
10-24180-4	F2P10-19 24V USA	09-45594	09-1077B-9*	-	-	0.2233.402	0.2172.506	21-4945	0.0140.001	21-4944**** 21-4946*****	-	-	-	01-35285-02
10-24181-1	F8B-9	09-45705	09-819B	01-42680	01-46794-02	0.2233.250	01-45354	01-42422-1	0.0138.134	01-42423	01-45547	0.3431.780	-	-
10-24181-2 Not in production	F8B-903	09-45705	09-819B	01-42425	01-46794-02	0.2233.250	01-45354	01-42422-1	0.0138.134	01-42423	01-45547	0.3431.780	-	-
10-24181-3 Not in production	F8B-9	-	09-819B	01-42680	01-46794-02	0.2234.337	01-45354	01-42422-1	0.0138.134	01-42423	01-45547	0.3431.780	-	-
10-24181-4 Not in production	F8B-903	-	09-819B	01-42425	01-46794-02	0.2234.337	01-45354	01-42422-1	0.0138.134	01-42423	01-45547	0.3431.780	-	-
10-24182-1 Obsolete, repl. by 10-24516-01	F3B-19 12V	09-45595	09-1052S-9*	01-45548	0.0279.500	0.2233.007	01-43142	01-43141	0.0279.501	-	-	-	-	01-35285-01
10-24182-2 Obsolete, repl. by 10-24516-02	F3B-19 24V	09-45595	09-1052S-9*	01-45548	0.0279.500	0.2233.007	01-43142	01-43141	0.0279.501	-	-	-	-	01-35285-02
10-24182-3 Obsolete, repl. by 10-24516-03	F3B-1907 12V	09-45595	09-1052S-9*	01-45548	0.0279.500	0.2233.007	01-43142	01-43141	0.0279.501	-	-	-	-	01-35285-01
10-24182-4 Obsolete, repl. by 10-24516-04	F3B-1907 24V	09-45595	09-1052S-9*	01-45548	0.0279.500	0.2233.007	01-43142	01-43141	0.0279.501	-	-	-	-	01-35285-02
10-24182-7 Obsolete, repl. by 10-24516-05	F3B-19 12V	09-45595	09-1052S-9*	01-45548	0.0279.500	0.2233.007	01-43142	01-46008	0.0279.501	-	-	-	-	01-35285-01
10-24182-8 Obsolete, repl. by 10-24516-06	F3B-19 24V	09-45595	09-1052S-9*	01-45548	0.0279.500	0.2233.007	01-43142	01-46008	0.0279.501	-	-	-	-	01-35285-02

A *- parts no. 1, 4, 5, 7 included* * *- gasket included* ** *- shaft drive end* *** *- included in service kit* **** *- back* ***** *- front*

Johnson Flexible Impeller Pumps

Part no.	Pump type	A Service kit	1 Impeller	2 Cam	3 Camscrew	4 Seal	5 Gasket	6 Endcover	7 Endcover screw	8 Wearplate	9 Shaft	10 Bearing	11 Bearing seal	Clutch or Motor
10-24183-1	F7B-9000	09-45592	09-1028B*	01-42679	01-46794-01	09-0.2247.003	01-42445	01-42441	0.0279.033	01-42443	01-45555	0.3431.203	0.2233.004/ 0.2233.011	-
10-24184-1	F5B-9	09-45585	09-1027B-1*	01-42397	01-46794-05	0.2233.001	01-42401	01-42398	0.0279.500	01-42399	01-45553	0.3431.761	-	-
10-24188-1	F5B-19 12V	09-45584	09-1027B-9	01-42397	01-46794-05	09-0.2247.050	01-42401	01-43252	01-46794-04	01-42399	-	-	-	01-24391-1
10-24188-2	F5B-19 24V	09-45584	09-1027B-9	01-42397	01-46794-05	09-0.2247.050	01-42401	01-43252	01-46794-04	01-42399	-	-	-	01-24391-2
10-24188-4	F5B-1907 12V	09-45584	09-1027B-9	01-42397	01-46794-05	09-0.2247.050	01-42401	01-46007	01-46794-04	01-42399	-	-	-	01-24391-1
10-24188-5	F5B-1907 24V	09-45584	09-1027B-9	01-42397	01-46794-05	09-0.2247.050	01-42401	01-46007	01-46794-04	01-42399	-	-	-	01-24391-2
10-24188-7 Not in production	F5B-19 12V	09-45584	09-1027B-9	01-42397	01-46794-05	09-0.2247.050	01-42401	01-46007	01-46794-04	01-42399	-	-	-	01-24391-1
10-24188-8 Not in production	F5B-19 24V	09-45584	09-1027B-9	01-42397	01-46794-05	09-0.2247.050	01-42401	01-46007	01-46794-04	01-42399	-	-	-	01-24391-2
10-24188-10 Not in production	F5B-19 24V	09-45584	09-1027B-9	01-42397	01-46794-05	09-0.2247.050	01-46395	01-46007	01-46794-04	01-42399	-	-	-	01-24391-5
10-24205-1	F4B-85	-	09-810B-5	01-42389	01-46794-04	0.2233.010	01-42391	01-42398	0.0279.501	-	01-45069	0.3431.748	-	-
10-24209-1	F7B-3000	09-45590	09-1028B*	01-42679	01-46794-01	09-0.2247.050	01-42445	01-42441	01-46794-05	01-42443	01-35177	0.3431.778	0.2234.004/ 0.2230.015	-
10-24209-2	F7B-3900	09-45591	09-1028B-9	01-42679	01-46794-01	09-0.2247.050	01-42445	01-42441	01-46794-05	01-42443	01-35177	0.3431.778	0.2234.004/ 0.2230.015	-
10-24209-3 Not in production	F7B-3030	09-45590	09-1028B*	01-42442	01-46794-07	09-0.2247.050	01-42445	01-42441	01-46794-05	01-42443	01-35177	0.3431.778	0.2234.004/ 0.2230.015	-
10-24209-4 Not in production	F7B-3930	09-45591	09-1028B-9	01-42442	01-46794-07	09-0.2247.050	01-42445	01-42441	01-46794-05	01-42443	01-35177	0.3431.778	0.2234.004/ 0.2230.015	-
10-24209-5 Not in production	F7B-3020	09-45590	09-1028B*	01-42584	01-46794-06	09-0.2247.050	01-42445	01-42441	01-46794-05	01-42443	01-35177	0.3431.778	0.2234.004/ 0.2230.015	-
10-24209-6 Not in production	F7B-3920	09-45590	09-1028B-9	01-42584	01-46794-06	09-0.2247.050	01-42445	01-42441	01-46794-05	01-42443	01-35177	0.3431.778	0.2234.004/ 0.2230.015	-
10-24209-7	F7B-30007	09-45590	09-1028B * 09-1028B*	01-42679	01-46794-01	09-0.2247.050	01-42445	01-42441	01-46794-05	01-42443	01-35177	0.3431.778	0.2234.004/ 0.2230.015	-
10-24209-8 Not in production	F7B-39007	09-45590	09-1028B-9	01-42679	01-46794-01	09-0.2247.050	01-42445	01-42441	01-46794-05	01-42443	01-35177	0.3431.778	0.2234.004/ 0.2230.015	-
10-24209-9 Not in production	F7B-30307	09-45590	09-1028B*	01-42442	01-46794-07	09-0.2247.050	01-42445	01-42441	01-46794-05	01-42443	01-35177	0.3431.778	0.2234.004/ 0.2230.015	-

A *- parts no. 1, 4, 5, 7 included* * *- gasket included* ** *- shaft drive end* *** *- included in service kit* **** *- back* ***** *- front*

Johnson Flexible Impeller Pumps

Part no.	Pump type	A Service kit	1 Impeller	2 Cam	3 Camscrew	4 Seal	5 Gasket	6 Endcover	7 Endcover screw	8 Wearplate	9 Shaft	10 Bearing	11 Bearing seal	Clutch or Motor
10-24209-10 Not in production	F7B-39307	09-45591	09-1028B-9	01-42442	01-46794-07	09-0.2247.050	01-42445	01-42441	01-46794-05	01-42443	01-35177	0.3431.778	0.2234.004/ 0.2230.015	-
10-24209-11 Not in production	F7B-30207	09-45590	09-1028B*	01-42584	01-46794-06	09-0.2247.050	01-42445	01-42441	01-46794-05	01-42443	01-35177	0.3431.778	0.2234.004/ 0.2230.015	-
10-24209-12 Not in production	F7B-39207	09-45590	09-1028B-9	01-42584	01-46794-06	09-0.2247.050	01-42445	01-42441	01-46794-05	01-42443	01-35177	0.3431.778	0.2234.004/ 0.2230.015	-
10-24210-1	F5B-3000	09-45583	09-1027B-1*	01-42397	01-46794-05	09-0.2247.050	01-42401	01-42398	01-46794-04	01-42399	01-35177	0.3431.778	0.2234.004/ 0.2230.015	-
10-24210-2 Not in production	F5B-3900	09-45584	09-1027B-9	01-42397	01-46794-05	09-0.2247.050	01-42401	01-42398	01-46794-04	01-42399	01-35177	0.3431.778	0.2234.004/ 0.2230.015	-
10-24210-3 Not in production	F5B-3020	09-45583	09-1027B-1*	01-45014	0.0279.032	09-0.2247.050	01-42401	01-42398	01-46794-04	01-42399	01-35177	0.3431.778	0.2234.004/ 0.2230.015	-
10-24210-4 Not in production	F5B-3920	09-45584	09-1027B-9	01-45014	0.0279.032	09-0.2247.050	01-42401	01-42398	01-46794-04	01-42399	01-35177	0.3431.778	0.2234.004/ 0.2230.015	-
10-24210-5	F5B-30007	09-45583	09-1027B-1*	01-42397	01-46794-05	09-0.2247.050	01-42401	01-42398	01-46794-04	01-42399	01-35177	0.3431.778	0.2234.004/ 0.2230.015	-
10-24210-6 Not in production	F5B-39007	09-45584	09-1027B-9	01-42397	01-46794-05	09-0.2247.050	01-42401	01-42398	01-46794-04	01-42399	01-35177	0.3431.778	0.2234.004/ 0.2230.015	-
10-24210-7 Not in production	F5B-30207	09-45583	09-1027B-1*	01-45014	0.0279.032	09-0.2247.050	01-42401	01-42398	01-46794-04	01-42399	01-35177	0.3431.778	0.2234.004/ 0.2230.015	-
10-24210-8 Not in production	F5B-39207	09-45584	09-1027B-9	01-45014	0.0279.032	09-0.2247.050	01-42401	01-42398	01-46794-04	01-42399	01-35177	0.3431.778	0.2234.004/ 0.2230.015	-
10-24214-1	F4B-9	09-45872	09-810B-1*	01-45660	0.0279.501	0.2233.251	01-45284	01-45282	0.0279.501	-	01-45658	0.3431.748	-	-
10-24214-2 Not in production	F4B-903	09-45872	09-810B-1*	Obsolete	0.0279.501	0.2233.251	01-45284	01-45282	0.0279.501	-	01-45658	0.3431.748	-	-
10-24214-3 Not in production	F4B-902	09-45872	09-810B-1*	01-45084	0.0279.501	0.2233.251	01-45284	01-45282	0.0279.501	-	01-45658	0.3431.748	-	-
10-24214-4	F4B-9	09-45872	09-810B-1*	01-45660	0.0279.501	0.2233.251	01-45284	01-45282	0.0279.501	-	01-45658	0.3431.748	-	-
10-24214-5 Not in production	F4B-903	09-45872	09-810B-1*	Obsolete	0.0279.501	0.2233.251	01-45284	01-45282	0.0279.501	-	01-45658	0.3431.748	-	-
10-24214-6 Not in production	F4B-902	09-45872	09-810B-1*	01-45084	0.0279.501	0.2233.251	01-45284	01-45282	0.0279.501	-	01-45658	0.3431.748	-	-

A - parts no. 1, 4, 5, 7 included ** - gasket included* *** - shaft drive end* **** - included in service kit* ***** - back* ****** - front*

Johnson Flexible Impeller Pumps

Part no.	Pump type	A Service kit	1 Impeller	2 Cam	3 Camscrew	4 Seal	5 Gasket	6 Endcover	7 Endcover screw	8 Wearplate	9 Shaft	10 Bearing	11 Bearing seal	Clutch or Motor
10-24215-1 Obsolete	F5B-9	09-45585	09-1027B-1*	01-42397	01-46794-05	0.2233.001	01-42401	01-42398	0.0279.500	01-42399	Obsolete	0.3431.761	-	-
10-24218-1	F7B-903	09-45592	09-1028B*	01-42442	01-46794-07	0.2233.001	01-42445	01-42441	0.0279.033	-	01-45044	0.3431.483	0.2233.001 ***	-
10-24225-1	F5B-9	09-45808	09-1027B-1*	01-45329	0.0279.033	0.2233.252	01-45315	01-45312-1	0.0141.502	-	01-45681	0.3431.742	-	-
10-24225-2	F5B-902	09-45808	09-1027B-1*	01-45656	0.0279.032	0.2233.252	01-45315	01-45312-1	0.0141.502	-	01-45681	0.3431.742	-	-
10-24225-3 Customer branded	F5B-9	09-45808	09-1027B-1*	01-45329	0.0279.033	0.2233.252	01-45315	01-45312-1	0.0141.502	-	01-45681	0.3431.742	-	
10-24226-1	F5B-85	-	09-1027B-5	01-42397	01-46794-05	0.2233.001	01-42401	01-42398	0.0279.500	-	01-45045	0.3431.742	-	-
10-24228-1	F5B-9	09-45808	09-1027B-1*	01-45329	0.0279.033	0.2233.001	01-45315	01-45312-1	0.0141.502	-	01-45681	0.3431.742	-	-
10-24228-2 Not in production	F5B-902	09-45808	09-1027B-1*	01-45656	0.0279.032	0.2233.001	01-45315	01-45312-1	0.0141.502	-	01-45681	0.3431.742	-	-
10-24228-3 Not in production	F5B-9	09-45808	09-1027B-1*	01-45329	0.0279.033	0.2233.001	01-45315	01-45312-1	0.0141.502	-	01-45681	0.3431.742	-	-
10-24228-4 Not in production	F5B-902	09-45808	09-1027B-1*	01-45656	0.0279.032	0.2233.001	01-45315	01-45312-1	0.0141.502	-	01-45681	0.3431.742	-	-
10-24228-5 Not in production	F5B-9	09-45808	09-1027B-1*	01-45329	0.0279.033	0.2233.001	01-45315	01-45312-1	0.0141.502	-	01-45681	0.3431.742	-	-
10-24228-6 Not in production	F5B-9	09-45808	09-1027B-1*	01-45329	0.0279.033	0.2233.252	01-45315	01-45312-1	0.0141.502	-	01-45681	0.3431.742	-	-
10-24230-1 Not in production	F5B-9	09-45808	09-1027B-1*	01-45329	0.0279.033	0.2233.252	01-45315	01-45312-1	0.0141.502	-	01-45681	0.3431.742	-	-
10-24230-2	F5B-902	09-45808	09-1027B-1*	01-45656	0.0279.032	0.2233.252	01-45315	01-45312-1	0.0141.502	-	01-45681	0.3431.742	-	-
10-24230-3	F5B-9	09-45808	09-1027B-1*	01-45329	0.0279.033	0.2233.252	01-45315	01-45312-1	0.0141.502	-	01-45681	0.3431.742	-	-
10-24230-4 Not in production	F5B-902	09-45808	09-1027B-1*	01-45656	0.0279.032	0.2233.252	01-45315	01-45312-1	0.0141.502	-	01-45681	0.3431.742	-	-
10-24230-5	F5B-9	-	09-1027B-1*	01-45329	0.0279.033	0.2233.001	01-45315	01-45312-1	0.0141.502	-	01-45681	0.3431.742	-	
10-24232-1	F6B-9	09-45825	09-812B-1**	01-45670	0.0279.033	0.2233.001	01-45315	01-45312-1	0.0141.502	-	01-45681	0.3431.742	-	-
10-24232-2 Not in production	F6B-902	09-45825	09-812B-1**	Obsolete	0.0279.032	0.2233.001	01-45315	01-45312-1	0.0141.502	-	01-45681	0.3431.742	-	-
10-24232-3 Not in production	F6B-9	09-45825	09-812B-1** 09-812B-1* *	01-45670	0.0279.033	0.2233.001	01-45315	01-45312-1	0.0141.502	-	01-45681	0.3431.742	-	-

A *- parts no. 1, 4, 5, 7 included* * *- gasket included* ** *- shaft drive end* *** *- included in service kit* **** *- back* ***** *- front*

Johnson Flexible Impeller Pumps

Part no.	Pump type	A Service kit	1 Impeller	2 Cam	3 Camscrew	4 Seal	5 Gasket	6 Endcover	7 Endcover screw	8 Wearplate	9 Shaft	10 Bearing	11 Bearing seal	Clutch or Motor
10-24232-4 Not in production	F6B-902	09-45825	09-812B-1**	01-45687	0.0279.032	0.2233.001	01-45315	01-45312-1	0.0141.502	-	01-45681	0.3431.742	-	-
10-24232-5 Customer branded	F6B-9	09-45825	09-812B-1**	01-45670	0.0279.033	0.2233.001	01-45315	01-45312-1	0.0141.502	-	01-45681	0.3431.742	-	-
10-24232-6 Customer branded	F6B-9	09-45825	09-812B-1**	01-45670	0.0279.033	0.2233.252	01-45315	01-45312-1	0.0141.502	-	01-45681	0.3431.742	-	-
10-24232-7 Customer branded	F6B-9	09-45825	09-812B-1*-1*	01-45670	0.0279.033	0.2233.001	01-45315	01-45312-1	0.0141.502	-	01-45681	0.3431.742	-	-
10-24232-8B Customer branded	F6B-9	09-45825	09-812B-1*-1*	01-45670	0.0279.033	0.2233.001	01-45315	01-45312-1	0.0141.502	-	01-45681	0.3431.742	-	
10-24234-1 Obsolete	F6B-9	09-45825	09-812B-1**	01-45670	0.0279.033	0.2233.252	01-45315	01-45312-1	0.0141.502	-	01-45681	0.3431.742	-	-
10-24234-2 Obsolete	F6B-902	09-45825	09-812B-1**	Obsolete	0.0279.032	0.2233.252	01-45315	01-45312-1	0.0141.502	-	01-45681	0.3431.742	-	-
10-24235-1 Not in production	F7B-9	09-45590	09-1028B*	01-42679	01-46794-01	09-0.2247.050	01-42445	01-42441	01-46794-05	01-42443	Obsolete	0.3431.486	0.2233.002	-
10-24235-2 Not in production	F7B-903	09-45590	09-1028B*	01-42442	01-46794-07	09-0.2247.050	01-42445	01-42441	01-46794-05	01-42443	Obsolete	0.3431.486	0.2233.002	-
10-24235-3	F7B-9	09-45590	09-1028B*	01-42679	01-46794-01	09-0.2247.050	01-42445	01-42441	01-46794-05	01-42443	01-35202	0.3431.486	0.2233.002	-
10-24236-1/-2 Obsolete, repl. by 10-24453-04/-05	TA3P10-19 12V	-	09-1052S-9*	-	-	0.2233.007	37-3206217	01-35189	Obsolete	37-3206221	-	-	-	Obsolete
10-24239-1 Customer branded	F9B-9	09-45581	09-802B	01-43137	01-46794-02	09-0.2247.051	01-42424	01-42422-1	0.0144.003	01-42423	01-35212	0.3431.701	0.2233.016	-
10-24239-2	F9B-9	09-45581	09-802B	01-43137	01-46794-02	09-0.2247.051	01-42424	01-42422-1	0.0144.003	01-42423	01-35212	0.3431.701	0.2233.016	-
10-24240-1/-2 Obsolete	T50AL-1 12/24V	-	Obsolete	-	-	09-0.2247.010	0.2173.459	Obsolete	Obsolete	-	-	-	-	Obsolete
10-24244-1 Obsolete	F7B-9	09-45592	09-1028B*	01-42679	01-46794-01	0.2233.001	01-42445	01-42441	0.0279.033	-	01-45753	0.3431.483	0.2233.001 ***	-
10-24244-2 Obsolete	F7B-903	09-45592	09-1028B*	01-42442	01-46794-07	0.2233.001	01-42445	01-42441	0.0279.033	-	01-45753	0.3431.483	0.2233.001 ***	-
10-24253-1	F7B-902	09-45590	09-1028B*	01-42584	01-46794-06	09-0.2247.050	01-42445	01-42441	01-46794-05	01-42443	01-35220	0.3431.523	0.2233.017	-
10-24253-2	F7B-9	09-45590	09-1028B*	01-42679	01-46794-01	09-0.2247.050	01-42445	01-42441	01-46794-05	01-42443	01-35220	0.3431.523	0.2233.017	-
10-24253-3	F7B-9	09-45590	09-1028B*	01-42679	01-46794-14	09-0.2247.050	01-42445	01-46431	01-46794-13	01-42443	01-35220	0.3431.523	0.2233.017	-

A *- parts no. 1, 4, 5, 7 included* * *- gasket included* ** *- shaft drive end* *** *- included in service kit* **** *- back* ***** *- front*

Johnson Flexible Impeller Pumps

Part no.	Pump type	A Service kit	1 Impeller	2 Cam	3 Camscrew	4 Seal	5 Gasket	6 Endcover	7 Endcover screw	8 Wearplate	9 Shaft	10 Bearing	11 Bearing seal	Clutch or Motor
10-24268-1 Not in production	F5B-9	09-45585	09-1027B-1*	01-42397	01-46794-05	0.2233.001	01-42401	01-42398	0.0279.501	01-42399	01-45821	0.3431.483	0.2233.001 ***	-
10-24268-2 Customer branded	F5B-902	09-45585	09-1027B-1*	01-45014	0.0279.032	0.2233.001	01-42401	01-42398	0.0279.501	01-42399	01-45821	0.3431.483	0.2233.001 ***	-
10-24268-3 Customer branded	F5B-902	09-45585	09-1027B-1*	01-45014	0.0279.032	0.2233.001	01-45933	01-42398	0.0279.501	01-42399	01-45821	0.3431.483	0.2233.001 ***	-
10-24268-4	F5B-9	09-45585	09-1027B-1*	01-42397	01-46794-05	0.2233.001	01-42401	01-42398	0.0279.501	01-42399	01-45821	0.3431.483	0.2233.001 ***	-
10-24268-5 Not in production	F5B-902	09-45585	09-1027B-1*	01-45014	0.0279.032	0.2233.001	01-42401	01-42398	0.0279.501	01-42399	01-45821	0.3431.483	0.2233.001 ***	-
10-24277-1 Customer branded	F7B-9	09-45592	09-1028B*	01-42679	01-46794-07	0.2233.001	01-42445	01-42441	0.0141.502	-	01-45844	0.3431.483	0.2233.001 ***	-
10-24277-2 Customer branded	F7B-902	09-45592	09-1028B*	01-42584	01-46794-06	0.2233.001	01-42445	01-42441	0.0141.502	-	01-45844	0.3431.483	0.2233.001 ***	-
10-24277-3	F7B-9	09-45592	09-1028B*	01-42679	01-46794-07	0.2233.001	01-42445	01-42441	0.0141.502	-	01-45844	0.3431.483	0.2233.001 ***	-
10-24277-4 Not in production	F7B-902	09-45592	09-1028B*	01-42584	01-46794-06	0.2233.001	01-42445	01-42441	0.0141.502	-	01-45844	0.3431.483	0.2233.001 ***	-
10-24277-5 Customer branded	F7B-9	09-45592	09-1028B*	01-42679	01-46794-07	0.2233.001	01-46397	01-42441	0.0141.502	-	01-45844	0.3431.483	0.2233.001 ***	-
10-24280-1 Obsolete	F7B-903	09-45592	09-1028B*	01-42442	01-46794-07	0.2233.001	01-42445	01-42441	0.0279.033	-	Obsolete	0.3431.483	0.2233.001 ***	-
10-24280-2 Obsolete	F7B-9	09-45592	09-1028B*	01-42679	01-46794-01	0.2233.001	01-42445	01-42441	0.0279.033	-	Obsolete	0.3431.742	0.2233.001 ***	-
10-24290-1	F4B-9	09-45872	09-810B-1*	01-45660	0.0279.501	0.2233.251	01-45284	01-45282	0.0279.501	-	01-45658	0.3431.748	-	-
10-24290-2 Not in production	F4B-903	09-45872	09-810B-1*	Obsolete	0.0279.501	0.2233.251	01-45284	01-45282	0.0279.501	-	01-45658	0.3431.748	-	-
10-24290-3 Not in production	F4B-902	09-45872	09-810B-1*	01-45084	0.0279.501	0.2233.251	01-45284	01-45282	0.0279.501	-	01-45658	0.3431.748	-	-
10-24302-01	F6B-9	09-45825	09-812B-1**	01-45670	0.0279.033	0.2233.252	01-45315	01-45312-1	0.0141.502	-	01-45681	0.3431.742	-	-
10-24302-02 Not in production	F6B-902	09-45825	09-812B-1**	Obsolete	0.0279.032	0.2233.252	01-45315	01-45312-1	0.0141.502	-	01-45681	0.3431.742	-	-
10-24305-01 Obsolete	F7B-903	09-45592	09-1028B*	01-42442	01-46794-07	0.2233.001	01-42445	01-42441	0.0279.033	-	Obsolete	0.3431.742	0.2233.001 ***	-

A *- parts no. 1, 4, 5, 7 included* * *- gasket included* ** *- shaft drive end* *** *- included in service kit* **** *- back* ***** *- front*

Johnson Flexible Impeller Pumps

Part no.	Pump type	A Service kit	1 Impeller	2 Cam	3 Camscrew	4 Seal	5 Gasket	6 Endcover	7 Endcover screw	8 Wearplate	9 Shaft	10 Bearing	11 Bearing seal	Clutch or Motor
10-24308-01 Customer branded	F9B-9	09-45920	09-814B	01-45173	01-46794-09	09-0.2247.008	01-45354	01-35284	0.0138.134	01-42423	01-35282	0.3431.684	0.2234.006	-
10-24308-02 Customer branded	F9B-905	09-45920	09-814B	01-45172	01-46794-09	09-0.2247.008	01-45354	01-35284	0.0138.134	01-42423	01-35282	0.3431.684	0.2234.006	-
10-24308-03 Customer branded	F9B-902	09-45920	09-814B	01-46230	01-46794-11	09-0.2247.008	01-45354	01-35284	0.0138.134	01-42423	01-35282	0.3431.684	0.2234.006	-
10-24315-01 Obsolete	F8B-903	-	09-819B	Obsolete	01-46794-09	09-0.2247.008	01-45354	01-42422-1	0.0138.134	01-42423	Obsolete	0.3431.525	0.2233.008	-
10-24316-01	F6B-9	09-45825	09-812B-1**	01-45670	0.0279.033	0.2233.252	01-45315	01-45312-1	0.0141.502	-	01-45681	0.3431.742	-	-
10-24316-02 Not in production	F6B-902	09-45825	09-812B-1**	Obsolete	0.0279.032	0.2233.252	01-45315	01-45312-1	0.0141.502	-	01-45681	0.3431.742	-	-
10-24318-01	F5B-905	09-45585	09-1027B-1*	01-45976	01-46794-05	0.2233.001	01-42401	01-42398	0.0279.500	01-42399	01-45978	0.3431.761	-	-
10-24319-01	F4B-9	09-45587	09-810B-1*	01-42389	01-46794-03	0.2233.010	01-45284	01-45282	0.0279.501	-	01-45993	0.3431.441	0.2233.010 ***	-
10-24319-02 Not in production	F4B-903	09-45587	09-810B-1*	01-45288	01-46794-03	0.2233.010	01-45284	01-45282	0.0279.501	-	01-45993	0.3431.441	0.2233.010 ***	-
10-24319-03 Not in production	F4B-902	09-45587	09-810B-1*	01-45084	0.0279.501	0.2233.010	01-45284	01-45282	0.0279.501	-	01-45993	0.3431.441	0.2233.010 ***	-
10-24321-01	F4B-9	09-45587	09-810B-1*	01-42389	01-46794-03	0.2233.010	01-45284	01-45282	0.0279.501	-	01-35293	0.3431.441	0.2233.010 ***	-
10-24321-02 Not in production	F4B-903	09-45587	09-810B-1*	01-45288	01-46794-03	0.2233.010	01-45284	01-45282	0.0279.501	-	01-35293	0.3431.441	0.2233.010 ***	-
10-24321-03 Not in production	F4B-902	09-45587	09-810B-1*	01-45084	0.0279.501	0.2233.010	01-45284	01-45282	0.0279.501	-	01-35293	0.3431.441	0.2233.010 ***	-
10-24325-01 Obsolete	F5B-9	09-45585	09-1027B-1*	01-42397	01-46794-05	0.2233.001	01-42401	01-42398	0.0279.500	-	Obsolete	0.3431.761	-	-
10-24325-02 Obsolete	F5B-902	09-45585	09-1027B-1*	01-45014	0.0279.032	0.2233.001	01-42401	01-42398	0.0279.500	-	Obsolete	0.3431.761	-	-
10-24326-01	F4B-9	09-45587	09-810B-1*	01-42389	01-46794-03	0.2233.010	01-45284	01-45282	0.0279.501	-	01-35293	0.3431.441	0.2233.010 ***	-
10-24326-02 Not in production	F4B-903	09-45587	09-810B-1*	01-45288	01-46794-03	0.2233.010	01-45284	01-45282	0.0279.501	-	01-35293	0.3431.441	0.2233.010 ***	-
10-24326-03 Not in production	F4B-902	09-45587	09-810B-1*	01-45084	0.0279.501	0.2233.010	01-45284	01-45282	0.0279.501	-	01-35293	0.3431.441	0.2233.010 ***	-

A *- parts no. 1, 4, 5, 7 included* * *- gasket included* ** *- shaft drive end* *** *- included in service kit* **** *- back* ***** *- front*

Johnson Flexible Impeller Pumps

Part no.	Pump type	A Service kit	1 Impeller	2 Cam	3 Camscrew	4 Seal	5 Gasket	6 Endcover	7 Endcover screw	8 Wearplate	9 Shaft	10 Bearing	11 Bearing seal	Clutch or Motor
10-24329-11 Obsolete	F7B-903	09-45592	09-1028B*	01-42442	01-46794-07	0.2233.001	01-42445	01-42441	0.0279.033	-	Obsolete	0.3431.483	0.2233.001 ***	-
10-24334-01	F5B -9	09-45585	09-1027B-1*	01-42397	01-46794-05	0.2233.001	01-42401	01-42398	0.0141.700	01-42399	01-35308	0.3431.761	-	-
10-24334-02 Not in production	F5B-902	09-45585	09-1027B-1*	01-45014	0.0279.032	0.2233.001	01-42401	01-42398	0.0279.500	01-42399	01-35308	0.3431.761	-	-
10-24335-01	F4B-9	09-45587	09-810B-1*	01-42389	01-46794-03	0.2233.010	01-45284	01-45282	0.0279.501	-	01-46046	0.3431.441	0.2233.010 ***	-
10-24336-01 Obsolete	F4B-9	09-45587	09-810B-1*	01-42389	01-46794-03	0.2233.010	01-45284	01-45282	0.0141.700	-	01-35293	0.3431.441	0.2233.010 ***	-
10-24336-02 Obsolete	F4B-903	09-45587	09-810B-1*	01-45288	01-46794-03	0.2233.010	01-45284	01-45282	0.0279.501	-	01-35293	0.3431.441	0.2233.010 ***	-
10-24336-03 Obsolete	F4B-902	09-45587	09-810B-1*	01-45084	0.0279.501	0.2233.010	01-45284	01-45282	0.0279.501	-	01-35293	0.3431.441	0.2233.010 ***	-
10-24338-01 Customer branded	F7B-9	09-45592	09-1028B*	01-42679	01-46794-01	0.2233.001	01-42445	01-42441	0.0279.033	-	01-46469	0.3431.742	0.2233.001 ***	-
10-24338-02 Obsolete	F7B-9	09-45592	09-1028B*	01-42679	01-46794-01	0.2233.001	01-42445	01-42441	0.0279.033	-	01-46469	0.3431.742	0.2233.001 ***	
10-24341-01	F4B-9	09-45587	09-810B-1*	01-42389	01-46794-03	0.2233.010	01-45284	01-45282	0.0279.501	-	01-45353	0.3431.441	0.2233.010 ***	-
10-24341-02 Obsolete	F4B-903	09-45587	09-810B-1*	01-45288	01-46794-03	0.2233.010	01-45284	01-45282	0.0279.501	-	01-45353	0.3431.441	0.2233.010 ***	-
10-24341-03 Obsolete	F4B-902	09-45587	09-810B-1*	01-45084	0.0279.501	0.2233.010	01-45284	01-45282	0.0279.501	-	01-45353	0.3431.441	0.2233.010 ***	-
10-24349-01	F7B-9	09-45592	09-1028B*	01-42679	01-46794-01	0.2233.001	01-42445	01-42441	0.0279.033	-	01-46092	0.3431.742	0.2233.001 ***	-
10-24365-01	F7B-9	09-45590	09-1028B*	01-42679	01-46794-01	09-0.2247.050	01-42445	01-42441	01-46794-05	01-42443	01-35220	0.3431.523	0.2233.017	-
10-24365-02 Customer branded	F7B-9	09-45590	09-1028B*	01-42679	01-46794-01	09-0.2247.050	01-42445	01-42441	01-46794-05	01-42443	01-35220	0.3431.523	0.2233.017	-
10-24372-01 Customer branded	F5B-9	09-45808	09-1027B-1*	01-45329	0.0279.033	0.2233.001	01-45315	01-45312-1	0.0141.502	-	04-46238	0.3431.754	-	-
10-24386-01 Obsolete	F7B-9	09-45592	09-1028B*	01-42679	01-46794-01	0.2233.001	01-42445	01-42441	0.0279.033	-	01-46195	0.3431.742	0.2234.482	-
10-24390-01 Obsolete	F7B-9	09-45592	09-1028B*	01-42679	01-46794-01	0.2233.001	01-42445	01-42441	0.0279.033	-	Obsolete	0.3431.483	0.2233.001 ***	-

A *- parts no. 1, 4, 5, 7 included* * *- gasket included* ** *- shaft drive end* *** *- included in service kit* **** *- back* ***** *- front*

Johnson Flexible Impeller Pumps

Part no.	Pump type	A Service kit	1 Impeller	2 Cam	3 Camscrew	4 Seal	5 Gasket	6 Endcover	7 Endcover screw	8 Wearplate	9 Shaft	10 Bearing	11 Bearing seal	Clutch or Motor
10-24394-01 Obsolete, repl. by 10-24524-01	F7B-9	09-45592	09-1028B*	01-42679	01-46794-07	0.2233.001	01-42445	01-42441	0.0141.502	-	01-45844	0.3431.483	0.2233.001 ***	-
10-24394-02 Obsolete	F7B-902	09-45592	09-1028B*	01-46242	01-46794-06	0.2233.001	01-42445	01-42441	0.0141.502	-	01-45844	0.3431.483	0.2233.001 ***	-
10-24394-03 Obsolete, repl. by 10-24524-03	F7B-9	09-45592	09-1028B*	01-42679	01-46794-07	0.2233.001	01-46397	01-42441	0.0141.502	-	01-45844	0.3431.483	0.2233.001 ***	-
10-24398-01	F7B-9	09-45592	09-1028B*	01-42679	01-46794-01	0.2233.001	01-42445	01-42441	0.0279.033	-	01-35670	0.3431.483	0.2233.001 ***	-
10-24398-02	F7B-9	09-45592	09-1028B*	01-42679	01-46794-01	0.2233.001	01-42445	01-42441	0.0279.033	-	01-35670	0.3431.483	-	
10-24412-01 Obsolete, repl. by 10-24562-01	F6B-9	09-46172	09-812B-1**	01-45670	0.0279.033	0.2233.001	01-45315	01-45312-1	0.0141.502	-	01-46268	0.3431.444	0.2233.001 ***	-
10-24412-02 Obsolete, repl. by 10-24562-01	F6B-9	09-46172	09-812B-1**	01-45670	0.0279.033	0.2233.001	01-45315	01-45312-1	0.0141.502	-	01-46268	0.3431.444	0.2233.001	- ***
10-24413-01	F75B-9	-	09-821B	01-46146	01-46794-12	09-0.2247.008	01-46286	01-46285	0.0141.502	01-42443	01-35685	0.3431.001/ 0.3431.044	0.2233.351	-
10-24413-02 Customer branded	F75B-9	-	09-821B	01-46146	01-46794-12	09-0.2247.008	01-46286	01-46285	0.0141.502	01-42443	01-35685	0.3431.001/ 0.3431.044	0.2233.351	-
10-24428-01	F7B-9	09-45592	09-1028B*	01-42679	01-46794-01	0.2233.001	01-42445	01-42441	0.0279.033	-	01-45044	0.3431.742	0.2233.001 ***	-
10-24430-01 Customer branded	F9B-9	-	09-814B	01-45018	01-46794-02	09-0.2247.051	01-42424	01-42422-1	0.0144.003	01-42423	01-35698-1	0.3431.684	0.2233.016	-
10-24431-01 Obsolete	F7B-9	09-45592	09-1028B*	01-42679	01-46794-01	0.2233.001	01-42445	01-42441	0.0279.033	-	01-45248	0.3431.483	0.2233.001	-
10-24432-01 Obsolete, repl. by 10-24563-01	F6B-9	09-46172	09-812B-1**	01-45670	0.0279.033	0.2233.001	01-45315	01-45312-1	0.0141.502	-	01-35697	0.3431.444	0.2233.001 ***	-
10-24432-02 Obsolete, repl. by 10-24563-01	F6B-9	09-46172	09-812B-1**	01-45670	0.0279.033	0.2233.001	01-45315	01-45312-1	01-46794-12	-	01-35697	0.3431.444	0.2233.001	- ***
10-24445-01	F7B-9	09-45590	09-1028B*	01-42679	01-46794-01	09-0.2247.050	01-42445	01-42441	01-46794-05	01-42443	01-35713	0.3431.484	0.2233.350	-
10-24451-01	F5B-9	09-45583	09-1027B *	01-42397	01-46794-05	09-0.2247.050	01-42401	01-42398	01-46794-04	01-42399	01-35713	0.3431.484	0.2233.350	-
10-24453-01	TA3P10-1907 12V	09-45595	09-1052S-9*	-	-	0.2233.007	37-3206217	01-35719-2	0.0142.737	37-3206221	-	-	-	01-24466-01
10-24453-02	TA3P10-1907 24V	09-45595	09-1052S-9*	-	-	0.2233.007	37-3206217	01-35719-2	0.0142.737	37-3206221	-	-	-	01-24466-02
10-24453-04	TA3P10-19 12V	09-45595	09-1052S-9*	-	-	0.2233.007	37-3206217	01-35719-1	0.0142.737	37-3206221	-	-	-	01-24466-01
10-24453-05	TA3P10-19 24V	09-45595	09-1052S-9*	-	-	0.2233.007	37-3206217	01-35719-1	0.0142.737	37-3206221	-	-	-	01-24466-02

A *- parts no. 1, 4, 5, 7 included* * *- gasket included* ** *- shaft drive end* *** *- included in service kit* **** *- back* ***** *- front*

Johnson Flexible Impeller Pumps

Part no.	Pump type	A Service kit	1 Impeller	2 Cam	3 Camscrew	4 Seal	5 Gasket	6 Endcover	7 Endcover screw	8 Wearplate	9 Shaft	10 Bearing	11 Bearing seal	Clutch or Motor
10-24461-01 Customer branded	F5B-9	09-45808	09-1027B-1*	01-45329	0.0279.033	0.2233.252	01-45315	01-45312-1	01-46794-12	-	01-45681	0.3431.742	-	-
10-24463-01 Customer branded, replaced by 10-24571-01	F4B-903	09-45905	09-1026B-1*	01-45288	01-46794-03	0.2233.010	01-45284	01-45282	0.0279.501	-	01-46492	0.3431.441	0.2233.010	- ***
10-24465-01 Customer branded, replaced by 10-24572-01	F4B-9	09-45905	09-1026B-1*	01-42389	01-46794-03	0.2233.010	01-45284	01-45282	0.0279.501	-	01-46491	0.3431.441	0.2233.010	- ***
10-24475-01 Not in production	F7B-902	09-45592	09-1028B*	01-42584	01-46794-06	0.2233.001	01-42445	01-42441	0.0279.033	-	01-46476	0.3431.742	0.2233.001 ***	
10-24475-02	F7B-903	09-45592	09-1028B*	01-42442	01-46794-07	0.2233.001	01-42445	01-42441	0.0279.033	-	01-46476	0.3431.742	0.2233.001 ***	-
10-24493-01 Customer branded	F6B-9	09-46693	09-812B-1**	01-46502	0.0279.033	0.2233.001	0.2173.475	01-46535	0.0141.502	-	01-46268-2	0.3431.444	0.2233.001 ***	-
10-24493-02 Customer branded	F6B-9	09-46693	09-812B-1**	01-46502	0.0279.033	0.2233.001	0.2173.475	01-46535	0.0141.502	-	01-46268-2	0.3431.444	0.2233.001 ***	-
10-24508-01 Obsolete, repl by 10-24508-03	F5B-9	09-46694-1	09-1027B-1*	-	-	0.2233.022	0.2173.475	01-46535	0.0141.503	01-46532	01-46531	0.3431.483	0.2233.001	-
10-24508-02 Obsolete	F5B-9	09-46694-2	09-1027B-1*	-	-	09-0.2247.050	0.2173.475	01-46535	0.0141.503	01-46532	01-46531	0.3431.483	0.2233.001	-
10-24508-03 Customer branded	F5B-9	-	09-1027B-1*	-	-	0.2233.022	0.2173.475	01-46535	0.0141.503	01-46532	01-46531	0.3431.483	0.2233.001	
10-24508-04 Customer branded	F5B-9	-	09-1027B-1*	-	-	09-0.2247.050	0.2173.475	01-46535	0.0141.503	01-46532	01-46531	0.3431.483	0.2233.001	
10-24509-01 Customer branded	F4B-903	09-45587	09-810B-1*	-	-	0.2233.010	0.2173.476	01-42398	0.0141.700	-	01-46541	0.3431.760/ 0.3431.748	-	-
10-24509-02 Customer branded	F4B-902	09-45587	09-810B-1*	-	-	0.2233.010	0.2173.476	01-42398	0.0141.700	-	01-46541	0.3431.760/ 0.3431.748	-	-
10-24512-01 Replaced by 10-24689-01	F4B-19 12V	09-46600	09-824P-9*	-	-	0.2233.007	0.2173.476	01-42398	0.0279.501	-	-	-	-	01-24452-1
10-24512-02 Replaced by 10-24689-02	F4B-19 24V	09-46600	09-824P-9*	-	-	0.2233.007	0.2173.476	01-42398	0.0279.501	-	-	-	-	01-24452-2
10-24512-03 Replaced by 10-24689-03	F4B-1907 12V	09-46600	09-824P-9*	-	-	0.2233.007	0.2173.476	01-42398	0.0279.501	-	-	-	-	01-24452-1
10-24512-04 Replaced by 10-24689-04	F4B-1907 24V	09-46600	09-824P-9*	-	-	0.2233.007	0.2173.476	01-42398	0.0279.501	-	-	-	-	01-24452-2

A *- parts no. 1, 4, 5, 7 included* * *- gasket included* ** *- shaft drive end* *** *- included in service kit* **** *- back* ***** *- front*

Johnson Flexible Impeller Pumps

Part no.	Pump type	A Service kit	1 Impeller	2 Cam	3 Camscrew	4 Seal	5 Gasket	6 Endcover	7 Endcover screw	8 Wearplate	9 Shaft	10 Bearing	11 Bearing seal	Clutch or Motor
10-24514-01	F4B-9	09-45587	09-810B-1*	01-42389	01-46794-03	0.2233.010	01-45284	01-45282	0.0279.501	-	01-46563	0.3431.441	-	-
10-24515-01 Customer branded	F6B-9	09-46693	09-812B-1**	-	-	0.2233.001	0.2173.475	01-46556	0.0279.301	-	01-46596	0.3431.742	0.2234.014	-
10-24516-01	F3B-19 12V	09-45595	09-1052S-9*	-	-	0.2233.007	0.2173.436	01-43131	0.0279.501	-	-	-	-	01-35285-01
10-24516-02	F3B-19 24V	09-45595	09-1052S-9*	-	-	0.2233.007	0.2173.436	01-43131	0.0279.501	-	-	-	-	01-35285-02
10-24516-03	F3B-1907 12V	09-45595	09-1052S-9*	-	-	0.2233.007	0.2173.436	01-43131	0.0279.501	-	-	-	-	01-35285-01
10-24516-04	F3B-1907 24V	09-45595	09-1052S-9*	-	-	0.2233.007	0.2173.436	01-43131	0.0279.501	-	-	-	-	01-35285-02
10-24516-05 Not in production	F3B-19 12V	09-45595	09-1052S-9*	-	-	0.2233.007	0.2173.436	01-46008	0.0279.501	-	-	-	-	01-35285-01
10-24516-06 Not in production	F3B-19 24V	09-45595	09-1052S-9*	-	-	0.2233.007	0.2173.436	01-46008	0.0279.501	-	-	-	-	01-35285-02
10-24524-01 Obsolete, repl. by 10-24524-02	F7B-9	09-45592	09-1028B*	-	-	0.2233.001	0.2172.012	Cust. branded	0.0141.502	-	01-45844	0.3431.483	0.2233.001	- ***
10-24524-02 Customer branded	F7B-9	09-45592	09-1028B*	-	-	0.2233.001	0.2172.012	Cust. branded	0.0141.502	01-46816	01-45844	0.3431.483	0.2233.001 ***	-
10-24524-03 Obsolete, repl. by 10-24524-05	F7B-9	09-45592	09-1028B*	-	-	0.2233.001	0.2172.012	Cust. branded	0.0141.502	-	01-45844	0.3431.483	0.2233.001	- ***
10-24524-04 Customer branded	F7B-9	09-45592	09-1028B*	-	-	0.2233.001	0.2172.012	Cust. branded	0.0141.502	01-46816-2	01-45844	0.3431.483	0.2233.001 ***	-
10-24524-05 Customer branded	F7B-9	09-45592	09-1028B*	-	-	0.2233.001	0.2172.012	Cust. branded	0.0141.502	01-46816	01-45844	0.3431.483	0.2233.001	-
10-24535-01 Customer branded	F7B-9	-	09-1028B*	-	-	09-0.2247.050	0.2172.012	01-46648-1	0.0141.502	01-46647	01-35838	0.3431.523	0.2233.017	
10-24542-01	F7B-903	09-45592	09-1028B*	01-42442	01-46794-07	0.2233.001	01-42445	01-42441	0.0138.987	-	01-46674	0.3431.742	0.2234.482	-
10-24551-01	F3B-19 230V	09-45595	09-1052S-9	-	-	0.2233.107	0.2173.436	01-43141	0.0279.501	-	-	-	-	01-35848-1
10-24551-02	F3B-19 110V	09-45595	09-1052S-9	-	-	0.2233.107	0.2173.436	01-43141	0.0279.501	-	-	-	-	01-35848-2
10-24551-03	F3B-19 230V	09-45595	09-1052S-9	-	-	0.2233.107	0.2173.436	01-43141	0.0279.501	-	-	-	-	01-35848-1
10-24551-04	F3B-19 110V	09-45595	09-1052S-9	-	-	0.2233.107	0.2173.436	01-43141	0.0279.501	-	-	-	-	01-35848-2
10-24554-01	F2P10-19 230V	09-45594		-	-	0.2234.402	0.2172.506	21-4945	0.0140.001	21-4944**** 21-4946*****	-	-	-	01-35848-1

A *- parts no. 1, 4, 5, 7 included* * *- gasket included* ** *- shaft drive end* *** *- included in service kit* **** *- back* ***** *- front*

Johnson Flexible Impeller Pumps

Part no.	Pump type	A Service kit	1 Impeller	2 Cam	3 Camscrew	4 Seal	5 Gasket	6 Endcover	7 Endcover screw	8 Wearplate	9 Shaft	10 Bearing	11 Bearing seal	Clutch or Motor
10-24556-01 Obsolete	F7B-5001 MC	09-45592	09-1028B*	01-42679	01-46794-01	0.2233.001	01-42445	01-42441	0.0279.033	-	01-35865	0.3431.742	-	0.3454.001 = 12V 2xA 0.3454.002 = 24V 2xA 0.3454.003 = 12V 1xB 0.3454.004 = 24V 1xB
10-24556-02 Obsolete	F7B-50017 MC	09-45592	09-1028B*	01-42679	01-46794-01	0.2233.001	01-42445	01-42441	0.0279.033	-	01-35865	0.3431.742	-	0.3454.001 = 12V 2xA 0.3454.002 = 24V 2xA 0.3454.003 = 12V 1xB 0.3454.004 = 24V 1xB
10-24559-01 Obsolete	F8B-5001 MC	09-45592	09-819B	01-42680	01-46794-02	09-0.2247.008	01-42424	01-42422-1	0.0138.134	01-42423	01-35875	0.3431.780	-	0.3454.001 = 12V 2xA 0.3454.002 = 24V 2xA 0.3454.003 = 12V 1xB 0.3454.004 = 24V 1xB
10-24559-02 Obsolete	F8B-50017 MC	09-45592	09-819B	01-42680	01-46794-02	09-0.2247.008	01-42424	01-42422-1	0.0138.134	01-42423	01-35875	0.3431.780	-	0.3454.001 = 12V 2xA 0.3454.002 = 24V 2xA 0.3454.003 = 12V 1xB 0.3454.004 = 24V 1xB
10-24562-01 Customer branded	F6B-9	-	09-812B-1**	01-45670	0.0279.033	0.2233.001	0.2173.475	01-46723	0.0141.502	-	01-46268	0.3431.444	0.2233.001	
10-24562-02 Customer branded	F6B-9	-	09-812B-1**	01-45670	0.0279.033	0.2233.001	0.2173.475	01-46723	0.0141.502	-	01-46268	0.3431.444	0.2233.001	
10-24563-01 Customer branded	F6B-9	-	09-812B-1**	01-45670	0.0279.033	0.2233.001	0.2173.475	01-46723	0.0141.502	-	01-35697	0.3431.444	0.2233.001	
10-24565-01 Customer branded	F3S-19 230V	09-45595	09-1052S-9	-	-	0.2233.107	0.2173.436	01-46729	0.0279.501	-	-	-	-	01-35848-1
10-24565-02 Customer branded	F3S-19 110V	09-45595	09-1052S-9	-	-	0.2233.107	0.2173.436	01-46729	0.0279.501	-	-	-	-	01-35848-2

A *- parts no. 1, 4, 5, 7 included* * *- gasket included* ** *- shaft drive end* *** *- included in service kit* **** *- back* ***** *- front*

Johnson Flexible Impeller Pumps

Part no.	Pump type	A Service kit	1 Impeller	2 Cam	3 Camscrew	4 Seal	5 Gasket	6 Endcover	7 Endcover screw	8 Wearplate	9 Shaft	10 Bearing	11 Bearing seal	Clutch or Motor
10-24567-01	F7B-903	09-45592	09-1028B*	01-42442	01-46794-07	0.2233.001	0.2173.402	01-42441	0.0138.987	-	01-35878	0.3431.742	0.2234.482	
10-24568-01 Obsolete	F6B-9	-	09-812B-1**	-	-	0.2233.001	0.2173.475	01-46556	0.0279.301	-	01-46596	0.3431.742	0.2234.014	
10-24569-01	F35B-8	09-46840	09-808B-1*	01-42910	01-46794-03	09-0.2247.021	0.2173.440	01-46739-2	0.0141.700	01-46676	01-46735-1	0.3431.748	-	
10-24569-03	F35B-802	09-46840	09-808B-1*	01-42415	01-46794-10	09-0.2247.021	0.2173.440	01-46739-2	0.0141.700	01-46676	01-46735-1	0.3431.748	-	
10-24569-09	F35B-8027	09-46840	09-808B-1*	01-42415	01-46794-10	09-0.2247.021	0.2173.440	01-46739-2	0.0141.700	01-46676	01-46735-1	0.3431.748	-	
10-24569-13 Obsolete, repl by 10-24569-01	F35B-8	09-45589	09-808B-1*	01-42910	01-46794-03	0.2233.010	0.2173.440	01-46739-2	0.0141.700	01-46676	01-46735-1	0.3431.748	-	
10-24569-15 Obsolete, repl by 10-24569-03	F35B-802	09-45589	09-808B-1*	01-42415	01-46794-10	0.2233.010	0.2173.440	01-46739-2	0.0141.700	01-46676	01-46735-1	0.3431.748	-	
10-24569-21 Obsolete, repl by 10-24569-09	F35B-8027	09-45589	09-808B-1*	01-42415	01-46794-10	0.2233.010	0.2173.440	01-46739-2	0.0141.700	01-46676	01-46735-1	0.3431.748	-	
10-24569-51	F35B-8007	09-46840	09-808B-1*	01-42910	01-46794-03	09-0.2247.021	0.2173.440	01-46739-2	0.0141.700	01-46676	01-46735-1	0.3431.748	-	
10-24569-52 Obsolete, repl by 10-24569-51	F35B-8007	09-45589	09-808B-1*	01-42910	01-46794-03	0.2233.010	0.2173.440	01-46739-2	0.0141.700	01-46676	01-46735-1	0.3431.748	-	
10-25469-53 Customer branded	F35B-8007	09-46840	09-808B-1*	01-42910	01-46794-03	09-0.2247.021	0.2173.440	01-46739-2	0.0141.700	01-46676	01-46735-1	0.3431.748	-	
10-24569-54 Customer branded	F35B-8007	09-45589	09-808B-1*	01-42910	01-46794-03	0.2233.010	0.2173.440	01-46739-2	0.0141.700	01-46676	01-46735-1	0.3431.748	-	
10-24570-01	F4B-8	09-46841	09-810B-1*	01-42389	01-46794-04	09-0.2247.021	0.2173.476	01-46007-2	0.0141.700	01-46737-2	01-46735-1	0.3431.748	-	
10-24570-02	F4B-89	09-46842	09-810B-9	01-42389	01-46794-04	09-0.2247.021	0.2173.476	01-46007-2	0.0141.700	01-46737-2	01-46735-1	0.3431.748	-	
10-24570-07	F4B-8007	09-46841	09-810B-1*	01-42389	01-46794-04	09-0.2247.021	0.2173.476	01-46007-2	0.0141.700	01-46737-2	01-46735-1	0.3431.748	-	
10-24570-13 Obsolete, repl by 10-24570-01	F4B-8	09-45587	09-810B-1*	01-42389	01-46794-04	0.2233.010	0.2173.476	01-46007-2	0.0141.700	01-46737-2	01-46735-1	0.3431.748	-	
10-24570-14 Obsolete, repl by 10-24570-02	F4B-89	09-45588	09-810B-9	01-42389	01-46794-04	0.2233.010	0.2173.476	01-46007-2	0.0141.700	01-46737-2	01-46735-1	0.3431.748	-	
10-24570-19 Obsolete, repl by 10-24570-07	F4B-8007	09-45587	09-810B-1*	01-42389	01-46794-04	0.2233.010	0.2173.476	01-46007-2	0.0141.700	01-46737-2	01-46735-1	0.3431.748	-	
10-24570-51	F4B-8007	09-46841	09-810B-1*	01-42389	01-46794-04	09-0.2247.021	0.2173.476	01-46007-2	0.0141.700	01-46737-2	01-46735-1	0.3431.748	-	
10-24570-52 Obsolete, repl by 10-24570-51	F4B-8007	09-45587	09-810B-1*	01-42389	01-46794-04	0.2233.010	0.2173.476	01-46007-2	0.0141.700	01-46737-2	01-46735-1	0.3431.748	-	

A *- parts no. 1, 4, 5, 7 included* * *- gasket included* ** *- shaft drive end* *** *- included in service kit* **** *- back* ***** *- front*

Johnson Flexible Impeller Pumps

Part no.	Pump type	A Service kit	1 Impeller	2 Cam	3 Camscrew	4 Seal	5 Gasket	6 Endcover	7 Endcover screw	8 Wearplate	9 Shaft	10 Bearing	11 Bearing seal	Clutch or Motor
10-24570-53 Not in production	F4B-8	09-46841	09-810B-1*	01-42389	01-46794-04	09-0.2247.021	0.2173.476	01-46007-2	0.0141.700	01-46737-2	01-46735-1	0.3431.748	-	
10-24570-54 Obsolete, repl by 10-24570-53	F4B-8	09-45587	09-810B-1*	01-42389	01-46794-04	0.2233.010	0.2173.476	01-46007-2	0.0141.700	01-46737-2	01-46735-1	0.3431.748	-	
10-24571-01	F5B-8	09-46843	09-1027B-1*	01-42397	01-46794-05	09-0.2247.022	0.2173.475	01-46747-2	0.0141.700	01-42399-2	01-46744	0.3431.742	-	
10-24571-02	F5B-89	09-46844	09-1027B-9	01-42397	01-46794-05	09-0.2247.022	0.2173.475	01-46747-2	0.0141.700	01-42399-2	01-46744	0.3431.742	-	
10-24571-03	F5B-802	09-46843	09-1027B-1*	01-45014	0.0279.032	09-0.2247.022	0.2173.475	01-46747-2	0.0141.700	01-42399-2	01-46744	0.3431.742	-	
10-24571-13 Obsolete, repl by 10-24571-01	F5B-8	09-45585	09-1027B-1*	01-42397	01-46794-05	0.2233.012	0.2173.475	01-46747-2	0.0141.700	01-42399-2	01-46744	0.3431.742	-	
10-24571-14 Obsolete, repl by 10-24571-02	F5B-89	09-45586	09-1027B-9	01-42397	01-46794-05	0.2233.012	0.2173.475	01-46747-2	0.0141.700	01-42399-2	01-46744	0.3431.742	-	
10-24571-15 Obsolete, repl by 10-24571-02	F5B-802	09-45585	09-1027B-1*	01-45014	0.0279.032	0.2233.012	0.2173.475	01-46747-2	0.0141.700	01-42399-2	01-46744	0.3431.742	-	
10-24571-51	F5B-8007	09-46843	09-1027B-1*	01-42397	01-46794-05	09-0.2247.022	0.2173.475	01-46747-2	0.0141.700	01-42399-2	01-46744	0.3431.742	-	
10-24571-52 Obsolete, repl by 10-24571-51	F5B-8007	09-45585	09-1027B-1*	01-42397	01-46794-05	0.2233.012	0.2173.475	01-46747-2	0.0141.700	01-42399-2	01-46744	0.3431.742	-	
10-24571-53 Not in production	F5B-8	09-46843	09-1027B-1*	01-42397	01-46794-05	09-0.2247.022	0.2173.475	01-46747-2	0.0141.700	01-42399-2	01-46744	0.3431.742	-	
10-24571-54 Obsolete, repl by 10-24571-53	F5B-8	09-45585	09-1027B-1*	01-42397	01-46794-05	0.2233.012	0.2172.012	01-46747-2	0.0141.700	01-42399-2	01-46744	0.3431.742	-	
10-24572-01	F7B-8	09-46845	09-1028B*	01-42679	01-46794-01	09-0.2247.022	0.2172.012	01-46648-3	0.0279.301	01-46798-2	01-46744	0.3431.742	-	
10-24572-05	F7B-803	09-46845	09-1028B*	01-42442	01-46794-07	09-0.2247.022	0.2172.012	01-46648-3	0.0279.301	01-46798-2	01-46744	0.3431.742	-	
10-24572-13 Obsolete, repl by 10-24572-01	F7B-8	09-45592	09-1028B*	01-42679	01-46794-01	0.2233.012	0.2172.012	01-46648-3	0.0279.301	01-46798-2	01-46744	0.3431.742	-	
10-24572-17 Obsoelte, repl by 10-24572-05	F7B-803	09-45592	09-1028B*	01-42442	01-46794-07	0.2233.012	0.2172.012	01-46648-3	0.0279.301	01-46798-2	01-46744	0.3431.742	-	
10-24572-51	F7B-8007	09-46845	09-1028B*	01-42679	01-46794-01	09-0.2247.022	0.2172.012	01-46648-3	0.0279.301	01-46798-2	01-46744	0.3431.742	-	
Obsolete, repl by 10-24572-51	F7B-8007	09-45592	09-1028B*	01-42679	01-46794-01	0.2233.012	0.2172.012	01-46648-3	0.0279.301	01-46798-2	01-46744	0.3431.742	-	
10-24572-53 Not in production	F7B-8	09-46845	09-1028B*	01-42679	01-46794-01	09-0.2247.022	0.2172.012	01-46648-3	0.0279.301	01-46798-2	01-46744	0.3431.742	-	

A *- parts no. 1, 4, 5, 7 included* * *- gasket included* ** *- shaft drive end* *** *- included in service kit* **** *- back* ***** *- front*

Johnson Flexible Impeller Pumps

Part no.	Pump type	A Service kit	1 Impeller	2 Cam	3 Camscrew	4 Seal	5 Gasket	6 Endcover	7 Endcover screw	8 Wearplate	9 Shaft	10 Bearing	11 Bearing seal	Clutch or Motor
10-24572-54 Obsolete, repl by 10-24572-53	F7B-8	09-45592	09-1028B*	01-42679	01-46794-01	0.2233.012	0.2172.012	01-46648-3	0.0279.301	01-46798-2	01-46744	0.3431.742	-	
10-24577-13 Obsolete	F7B-5001	09-45592	09-1028B*	01-42679	01-46794-01	0.2233.012	0.2172.012	01-46648-3	0.0279.301	01-46798-2	01-46745	0.3431.742	-	0.3454.001 = 12V 2xA 0.3454.002 = 24V 2xA 0.3454.003 = 12V 1xB 0.3454.004 = 24V 1xB
10-24577-19 Obsolete	F7B-50017	09-45592	09-1028B*	01-42679	01-46794-01	0.2233.012	0.2172.012	01-46648-3	0.0279.301	01-46798-2	01-46745	0.3431.742	-	0.3454.001 = 12V 2xA 0.3454.002 = 24V 2xA 0.3454.003 = 12V 1xB 0.3454.004 = 24V 1xB
10-24577-98	F7B-50017	09-46868	09-1028B*	01-42679	01-46794-01	09-0.2247.022	0.2172.012	01-46648-3	0.0279.301	01-46798-2	01-46745	0.3431.742	-	0.3454.001 = 12V 2xA 0.3454.002 = 24V 2xA 0.3454.003 = 12V 1xB 0.3454.004 = 24V 1xB
10-24577-99	F7B-5001	09-46868	09-1028B*	01-42679	01-46794-01	09-0.2247.022	0.2172.012	01-46648-3	0.0279.301	01-46798-2	01-46745	0.3431.742	-	0.3454.001 = 12V 2xA 0.3454.002 = 24V 2xA 0.3454.003 = 12V 1xB 0.3454.004 = 24V 1xB
10-24578-03 Obsolete	F7B-5001-MC	09-46845	09-1028B*	01-42679	01-46794-01	09-0.2247.022	0.2172.012	01-46648-3	0.0279.301	01-46798-2	01-35894	0.3431.742	-	0.3454.001 = 12V 2xA 0.3454.002 = 24V 2xA 0.3454.003 = 12V 1xB 0.3454.004 = 24V 1xB

A *- parts no. 1, 4, 5, 7 included* * *- gasket included* ** *- shaft drive end* *** *- included in service kit* **** *- back* ***** *- front*

Johnson Flexible Impeller Pumps

Part no.	Pump type	A Service kit	1 Impeller	2 Cam	3 Camscrew	4 Seal	5 Gasket	6 Endcover	7 Endcover screw	8 Wearplate	9 Shaft	10 Bearing	11 Bearing seal	Clutch or Motor
10-24578-04 Obsolete	F7B-50017-MC	09-46845	09-1028B*	01-42679	01-46794-01	09-0.2247.022	0.2172.012	01-46648-3	0.0279.301	01-46798-2	01-35894	0.3431.742	-	0.3454.001 = 12V 2xA 0.3454.002 = 24V 2xA 0.3454.003 = 12V 1xB 0.3454.004 = 24V 1xB
10-24580-01 Customer branded	F7B-9	-	09-1028B*	01-46899	01-46794-01	09-0.2247.050	01-42445	01-42441	01-46794-05	01-42443	01-35897	0.3431.742	-	
10-24591-01 Customer branded	F6B-9	-	09-812B-1*	01-45670	0.0279.033	0.2233.001	0.2173.475	01-46723	0.0141.502	-	01-35697	0.3431.444	-	
10-24592-01 Customer branded	F6B-9	-	09-812B-1*	01-45670	0.0279.033	0.2233.001	0.2173.475	01-46723	0.0141.502	-	01-35697	0.3431.444	-	
10-24593-01 Customer branded	F6B-9	-	09-812B-1*	01-45670	0.0279.033	0.2233.001	0.2173.475	01-46723	0.0141.502	-	01-46268	05-08-520	-	
10-24599-01 Customer branded	F7B-9	-	09-1028B	-	-	0.2233.252	0.2172.012	01-46648-1	0.0141.502	01-46816	01-46837	0.3431.778	-	
10-24609-01	F3S-19 1ph 230V	09-45595	09-1052S-9	-	-	0.2233.107	0.2173.436	01-46729	0.0279.501	-	-	-	-	01-35848-1
10-24609-02	F3S-19 1ph 110V	09-45595	09-1052S-9	-	-	0.2233.107	0.2173.436	01-46729	0.0279.501	-	-	-	-	01-35848-2
10-24621-01	F7B-9	-	09-1028B	01-42442	0.0279.033	09-0.2247.022	0.2172.012	01-46648-3	0.0279.301	01-46798-2	01-35965-1	0.3431.742	0.2233.403	
10-24630-01	F7B-9	-	09-1028B	01-46899	0.0279.033	09-0.2247.022	0.2172.012	01-46648-3	0.0279.301	01-46798-2	01-35964	0.3431.742	0.2233.403	
10-24630-02	F7B-9	-	09-1028B	01-46899-1	0.0279.033	09-0.2247.022	0.2172.012	01-46648-3	0.0279.301	01-46798-2	01-35964	0.3431.742	0.2233.403	
10-24633-01 Customer branded	F6B-9	-	09-812B-1*	-	-	09-0.2247.022	0.2173.475	01-46556	0.0141.502	01-46969	01-46964	0.3431.778	0.2234.016	
10-24637-01	F7B-9	-	09-1028B	01-46899	0.0279.033	09-0.2247.022	0.2172.012	01-46648-3	0.0138.987	01-46798-2	01-35965-2	0.3431.742	-	
10-24638-01	F35B Duo	-	09-808B-1*	01-42415	01-46794-10	09-0.2247.021	0.2173.440	01-46739-2	0.0141.700	01-46676	01-47053 01-47052	0.3431.748	-	
10-24638-02	F35B SWP	-	09-808B-1*	01-42415	01-46794-10	09-0.2247.021	0.2173.440	01-46739-2	0.0141.700	01-46676	01-47053	0.3431.748	-	
10-24638-03	F35B FWP	-	09-808B-1*	01-42415	01-46794-10	09-0.2247.021	0.2173.440	01-46739-2	0.0141.700	01-46676	01-47052	0.3431.748	-	
10-24654-01	F7B-903	-	09-1028B	01-42442	01-46794-10	0.2233.001	01-42445	01-42441	0.0279.033	-	-	0.3431.742	-	
10-24666-01 Customer branded	F7B-9	-	09-1028B	01-46899	0.0279.033	09-0.2247.022	0.2172.012	01-46648-3	0.0279.301	01-46798-2	01-36044	0.3431.742	-	

A *- parts no. 1, 4, 5, 7 included* * *- gasket included* ** *- shaft drive end* *** *- included in service kit* **** *- back* ***** *- front*

Johnson Flexible Impeller Pumps

Part no.	Pump type	A Service kit	1 Impeller	2 Cam	3 Camscrew	4 Seal	5 Gasket	6 Endcover	7 Endcover screw	8 Wearplate	9 Shaft	10 Bearing	11 Bearing seal	Clutch or Motor
10-24666-02 Customer branded	F7B-9	-	09-1028B	01-46899	0.0279.033	09-0.2247.022	0.2172.012	01-46648-3	0.0279.301	01-46798-2	01-36045	0.3431.742	-	
10-24667-01 Customer branded	F7B-9	-	09-1028B	01-46899	0.0279.033	09-0.2247.022	0.2172.012	01-46648-3	0.0279.301	01-46798-2	01-36046	0.3431.742	-	
10-24689-01	F4B-19 12V	09-46600	09-824P-9	-	-	0.2233.007	0.2173.476	01-42398	0.0279.501	-	-	-	-	01-24676-01
10-24689-02	F4B-19 24V	09-46600	09-824P-9	-	-	0.2233.007	0.2173.476	01-42398	0.0279.501	-	-	-	-	01-24676-02
10-24689-03	F4B-1907 12V	09-46600	09-824P-9	-	-	0.2233.007	0.2173.476	01-42398	0.0279.501	-	-	-	-	01-24676-01
10-24689-04	F4B-1907 24V	09-46600	09-824P-9	-	-	0.2233.007	0.2173.476	01-42398	0.0279.501	-	-	-	-	01-24676-02
10-24690-01	F4B-11 12V BSP	-	09-824P-1	-	-	0.2233.007	0.2173.476	01-42398	0.0279.501	-	-	-	-	01-24676-01
10-24690-02	F4B-11 24V BSP	-	09-824P-1	-	-	0.2233.007	0.2173.476	01-42398	0.0279.501	-	-	-	-	01-24676-02
10-24690-03 01-24676-01	F4B-11 12V NPTF		-	09-824P-1	-	-	0.2233.007	0.2173.476	01-42398	0.0279.501	-	-	-	-
10-24690-04 01-24676-02	F4B-11 24V NPTF		-	09-824P-1	-	-	0.2233.007	0.2173.476	01-42398	0.0279.501	-	-	-	-
10-24707-01	F35B-902	-	09-808B-1*	01-42415	01-46794-10	0.2233.010	01-43240	01-43239	0.0279.501	01-45087	01-45543	0.3431.441	-	
10-24727-01	F38B-19 12V	09-46600	09-824P-9	-	-	0.2233.007	0.2173.476	01-42398	0.0279.501	-	-	-	-	01-35285-01
10-24727-02	F38B-19 24V	09-46600	09-824P-9	-	-	0.2233.007	0.2173.476	01-42398	0.0279.501	-	-	-	-	01-35285-02
10-24727-03	F38B-1907 12V	09-46600	09-824P-9	-	-	0.2233.007	0.2173.476	01-42398	0.0279.501	-	-	-	-	01-35285-01
10-24727-04	F38B-1907 24V	09-46600	09-824P-9	-	-	0.2233.007	0.2173.476	01-42398	0.0279.501	-	-	-	-	01-35285-02
10-24734-04 Customer branded	F4B-9	-	09-810B-1*	-	-	0.2233.010	0.2173.476	01-46007-3	0.0141.700	-	01-36127	0.3431.748	-	
10-24734-05 Customer branded	F4B-9	-	09-810B-1*	-	-	0.2233.010	0.2173.476	01-46007-2	0.0141.700	-	01-36127	0.3431.748	-	
10-24748-01 Customer branded	F7B-9	-	09-1028B	01-46899	0.0279.033	09-0.2247.022	0.2172.012	01-46648-3	0.0279.301	01-46798-2	01-36046	0.3431.742	-	
10-24749-01 Customer branded	F4B-9	-	09-810B-1*	01-45084	01-46794-10	09-0.2247.021	0.2173.476	01-46007-2	0.0279.300	01-46737-2	Cust.branded	0.3431.748	0.2234.021	
10-24751-01 Customer branded	F4B-903	-	09-1026B-1*	01-45288	01-46794-03	0.2233.010	01-45284	01-45600	0.0279.300	-	01-46492	0.3431.441	-	

A - parts no. 1, 4, 5, 7 included ** - gasket included* *** - shaft drive end* **** - included in service kit* ***** - back* ****** - front*

Johnson Flexible Impeller Pumps

Part no.	Pump type	A Service kit	1 Impeller	2 Cam	3 Camscrew	4 Seal	5 Gasket	6 Endcover	7 Endcover screw	8 Wearplate	9 Shaft	10 Bearing	11 Bearing seal	Clutch or Motor
10-24752-01 Customer branded	F4B-9	-	09-1026B-1*	01-42389	01-46794-03	0.2233.010	01-45284	01-45600	0.0279.300	-	01-46491	0.3431.441	-	
10-24753-01 Customer branded	F7B-9	-	09-1028B	01-46899	0.0279.033	09-0.2247.022	0.2172.012	01-46648-3	0.0279.301	01-46798-2	01-36141	0.3431.742	-	
10-24760-01	F3B-19 12V	-	09-843S-9	-	-	0.2233.007	0.2173.436	01-43141	0.0279.501	-	-	-	-	04-24757-01
10-24760-01	F3B-19 12V	-	09-843S-9	-	-	0.2233.007	0.2173.436	01-43141	0.0279.501	-	-	-	-	04-24757-02
10-31917-1 Obsolete, repl. by 10-35098-2	F4B-9	09-45904	09-1026B-1*	01-42389	01-46794-04	0.2233.005	01-42391	01-42388-1	01-46794-03	-	Obsolete	-	-	-
10-31934-1 Obsolete, repl. by 10-35157-3	F4B-9	-	09-806B-1*	01-42415	01-46794-03	0.2233.005	01-42417	Obsolete	01-46794-10	-	Obsolete	-	-	-
10-32058-1	F5B-9	09-45913	09-801B-1*	01-42397	01-46794-05	0.2233.001	01-42636	01-32064	01-46794-04	01-42399	01-42644	-	-	-
10-32256-1	F5B-9	09-45583	09-1027B-1*	01-42397	01-46794-05	09-0.2247.050	01-42401	01-42398	01-46794-04	01-42399	01-42756	0.3431.482	0.2233.001 ***	-
10-32280-1 Obsolete, repl. by 10-35157-3	F35B-9	09-45167	09-806B-1*	01-42910	01-46794-03	0.2233.005	01-42911	Obsolete	01-46794-10	-	Obsolete	-	-	-
10-32388-1 Obsolete	F35B-9	-	09-806B-1*	01-42415	01-46794-03	0.2233.005	01-42417	Obsolete	01-46794-10	-	Obsolete	-	-	-
10-32412-1 Obsolete, repl. by 10-35157-3	F35B-9	-	09-808B-1*	01-42910	01-46794-03	0.2233.010	01-43240	01-43239	01-46794-10	-	01-45175	01-43131	-	-
10-32412-2 Obsolete, repl. by 10-35157-4	F35B-902	-	09-808B-1*	01-42415	01-46794-03	0.2233.010	01-43240	01-43239	01-46794-10	-	01-45175	01-43131	-	-
10-32415-1 Obsolete, repl. by 10-35157-3	F35B-9	-	09-806B-1*	01-42910	01-46794-03	0.2233.005	01-42911	Obsolete	01-46794-10	-	Obsolete	-	-	
10-32579-1	F3P10	-	09-1052S-9*	-	-	-	-	-	-	-	-	-	-	-
10-32588-1 Obsolete	F4B-9	09-45904	09-1026B-1*	01-42389	01-46794-04	0.2233.005	01-42391	01-42388-1	01-46794-03	-	Obsolete	-	-	-
10-32603-1 Obsolete	F5B-9	09-45913	09-801B-1*	01-42397	01-46794-05	0.2233.001	01-42401	01-42398	0.0141.500	-	Obsolete	Obsolete	-	-
10-32621-1 Obsolete, repl. by 10-32621-3	F5B-902	09-45913	09-801B-1*	01-45014	0.0279.032	0.2233.001	01-45930	01-45021	0.0141.901	-	01-45022	01-45023	-	-
10-32621-2	F5B-9	09-45913	09-801B-1*	01-42397	01-46794-05	0.2233.001	01-45930	01-45021	0.0141.901	-	01-45022	01-45023	-	-
10-32621-3	F5B-902	09-45913	09-801B-1*	01-45014	0.0279.032	0.2233.001	01-45930	01-45021	0.0141.901	-	01-45022	01-45023	-	-

A *- parts no. 1, 4, 5, 7 included* * *- gasket included* ** *- shaft drive end* *** *- included in service kit* **** *- back* ***** *- front*

Johnson Flexible Impeller Pumps

Part no.	Pump type	A Service kit	1 Impeller	2 Cam	3 Camscrew	4 Seal	5 Gasket	6 Endcover	7 Endcover screw	8 Wearplate	9 Shaft	10 Bearing	11 Bearing seal	Clutch or Motor
10-35015-1 Obsolete, repl. by 10-35157- (Customer branded)	F35B-9	09-45589	09-808B-1*	01-42910	01-46794-03	0.2233.010	01-43240	Cust.brand.	0.0279.300	-	01-45175	01-43131	-	-
10-35015-2	F35B-9	09-45589	09-808B-1*	01-42910	01-46794-03	0.2233.010	01-43240	01-43239	0.0279.300	-	01-45175	01-43131	-	-
10-35015-3 Obsolete, repl. by 10-35157-3	F35B-9	09-45589	09-808B-1*	01-42910	01-46794-03	0.2233.010	01-43240	01-43239	0.0279.300	-	01-45175	01-43131	-	-
10-35024-1 Obsolete, repl. by 10-35098-2	F4B-9	09-45904	09-1026B-1*	01-42389	01-46794-04	0.2233.005	01-42391	01-42388-1	01-46794-03	-	Obsolete	-	-	-
10-35038-1	F35B-8	09-45589	09-808B-1*	01-42910	01-46794-03	0.2233.010	01-43240	01-43239	0.0279.300	01-45087	01-45069	0.3431.748	-	-
10-35038-2 Obsolete	F35B-802	09-45589	09-808B-1*	01-42415	01-46794-10	0.2233.010	01-43240	01-43239	0.0279.300	01-45087	01-45069	0.3431.748	-	-
10-35038-3 Obsolete	F35B-8	09-45589	09-808B-1*	01-42910	01-46794-03	0.2233.010	01-43240	01-43239	0.0141.500	01-45087	Obsolete	0.3431.748	-	-
10-35038-4 Obsolete, repl. by 10-35038-41	F35B-8007	09-45589	09-808B-1*	01-42415	01-46794-10	0.2233.010	01-43240	01-43239	0.0141.500	01-45087	01-45069	0.3431.748	-	-
10-35038-5	F35B-8027	09-45589	09-808B-1*	01-42415	01-46794-10	0.2233.010	01-43240	01-43239	0.0141.500	01-45087	01-45069	0.3431.748	-	
10-35038-6 Obsolete	F35B-802	09-45589	09-808B-1*	01-42415	01-46794-10	0.2233.010	01-43240	01-43239	0.0141.500	01-45087	Obsolete	0.3431.748	-	-
10-35038-7 Obsolete, repl. by 10-35038-9	F35B-8027	09-45589	09-808B-1*	01-42415	01-46794-10	0.2233.010	01-43240	01-43239	0.0141.700	01-45087	01-45069	0.3431.748	-	-
10-35038-8 Obsolete	F35B-8	09-45589	09-808B-1*	01-42910	01-46794-03	0.2233.010	01-43240	01-46675	0.0141.700	01-46676	01-45069	0.3431.748	-	-
10-35038-9 Customer branded	F35B-8007	09-45589	09-808B-1*	01-42910	01-46794-03	0.2233.010	01-43240	01-43239	0.0141.700	01-45087	01-45069-2	0.3431.748	-	-
10-35038-41	F35B-8007	09-45589	09-808B-1*	01-42415	01-46794-10	0.2233.010	01-43240	01-43239	0.0141.500	01-45087	01-46416	0.3431.748	-	-
10-35039-1 Obsolete	F35B-9	-	09-806B-1*	01-42910	01-46794-03	0.2233.010	01-43240	01-43239	0.0279.501	-	Obsolete	01-43131	-	-
10-35052-1 Obsolete	F35B-9	09-45589	09-808B-1*	01-42910	01-46794-03	0.2233.010	01-43240	01-43239	0.0279.501	01-45087	01-45098	0.3431.748	-	-
10-35055-1 Customer branded	F2P10-19 12V	09-45594	09-1077B-9*	-	-	0.2233.402	0.2172.506	21-4945	0.0140.001	21-4944**** 21-4946*****	-	-	-	01-35285-01 01-35285-02
10-35055-2 Customer branded	F2P10-19 24V	09-45594	09-1077B-9*	-	-	0.2233.402	0.2172.506	21-4945	0.0140.001	21-4944**** 21-4946*****	-	-	-	

A *- parts no. 1, 4, 5, 7 included* * *- gasket included* ** *- shaft drive end* *** *- included in service kit* **** *- back* ***** *- front*

Johnson Flexible Impeller Pumps

Part no.	Pump type	A Service kit	1 Impeller	2 Cam	3 Camscrew	4 Seal	5 Gasket	6 Endcover	7 Endcover screw	8 Wearplate	9 Shaft	10 Bearing	11 Bearing seal	Clutch or Motor
10-35058-1 Obsolete	F4B-9	09-45904	09-1026B-1*	01-42389	01-46794-04	0.2233.005	01-42391	01-42388-1	0.0279.501	-	Obsolete	-	-	-
10-35064-1	F4B-9	09-45904	09-1026B-01* 09-1026B-1*	01-42389	01-46794-03	0.2233.005	01-42391	01-42388-1	01-46794-03	-	01-45111	-	-	-
10-35065- Obsolete, repl. by 10-35157-3 + 10-24143-1	F35B/F35B-9	-	09-808B-1*	01-42910 0.2233.200	01-46794-03 01-45400	0.2233.010	01-43240	01-43239	0.0141.500	01-45087	Obsolete	01-43131	-	-
10-35066- Obsolete, repl. by 10-35157-3 + 10-24143-1	F35B/F35B-9	09-45894	09-808B-1* F35B-9	01-42910	01-46794-03	0.2233.010	01-43240	01-43239	0.0141.500	01-45087	Obsolete	01-43131	-	-
10-35067-1 Obsolete	F5B-9	09-45913	09-801B-1*	01-42397	01-46794-05	0.2233.001	01-42401	Obsolete	0.0141.500	-	Obsolete	Obsolete	-	-
10-35087-1 Obsolete	F4B-9	09-45905	09-1026B-1*	01-42389	01-46794-04	0.2233.010	01-42391	01-42388-1	0.0279.501	-	Obsolete	-	-	-
10-35088-1 Obsolete, repl. by 10-35157- (Customer branded)	F35B-9	09-45589	09-808B-1*	01-42910	01-46794-03	0.2233.010	01-43240	01-43239	0.0279.501	-	01-45175	01-43131	-	-
10-35088-2 Obsolete, repl. by 10-35157-3	F35B-902	09-45589	09-808B-1*	01-42415	01-46794-03	0.2233.010	01-43240	01-43239	0.0279.501	-	01-45175	01-43131	-	-
10-35088-3 Obsolete, repl. by 10-35157-3	F35B-9	09-45589	09-808B-1*	01-42910	01-46794-03	0.2233.010	01-43240	01-43239	0.0279.501	-	01-45175	01-43131	-	-
10-35091-1 Obsolete	F35B-9	09-45589	09-808B-1*	01-42910	01-46794-03	0.2233.010	01-43240	01-43239	0.0279.501	01-45087	01-45193	0.3431.441	0.2233.010 ***	-
10-35091-2 Obsolete	F35B-902	09-45589	09-808B-1*	01-42415	01-46794-10	0.2233.010	01-43240	01-43239	0.0279.501	01-45087	01-45193	0.3431.441	0.2233.010 ***	-
10-35091-3 Obsolete	F35B-902	09-45589	09-808B-1*	01-42415	01-46794-10	0.2233.010	01-43240	01-43239	0.0279.501	01-45087	01-45193	0.3431.441	0.2233.010 ***	-
10-35094-1 Obsolete	F4B-9	-	09-1026B-1*	01-42389	01-46794-04	Obsolete	01-42391	01-42388-1	0.0279.501	-	Obsolete	-	-	-
10-35098-1 Customer branded	F4B-9	09-45905	09-1026B-1*	01-42389	01-46794-03	0.2233.010	01-45284	01-45282	0.0279.501	-	01-45235	0.3431.441	0.2233.010 ***	-
10-35098-2	F4B-9	09-45905	09-1026B-1*	01-42389	01-46794-03	0.2233.010	01-45284	01-45282	0.0279.501	-	01-45235	0.3431.441	0.2233.010 ***	-
10-35098-3	F4B-9	09-45905	09-1026B-1*	01-42389	01-46794-03	0.2233.010	01-45284	01-45282	0.0279.501	-	01-45235	0.3431.441	0.2233.010 ***	-
10-35098-4	F4B-9	09-45905	09-1026B-1*	01-42389	01-46794-03	0.2233.010	01-45284	01-45282	0.0279.501	-	01-45235	0.3431.441	0.2233.010 ***	-
10-35100-1	F5B-9	09-45585	09-1027B-1*	01-42397	01-46794-05	0.2233.001	01-42401	01-42398	0.0279.500	01-42399	01-45187	0.3431.761	-	-
10-35115-1 Obsolete, can be replaced by 10-35333-01 + 2 pcs clamp 01-43238	F4B-9	09-45587	09-810B-1*	01-42389	01-46794-03	0.2233.010	01-45284	01-45282	0.0279.501	-	01-45193	0.3431.441 ***	0.2233.010	-

A *- parts no. 1, 4, 5, 7 included* * *- gasket included* ** *- shaft drive end* *** *- included in service kit* **** *- back* ***** *- front*

Johnson Flexible Impeller Pumps

Part no.	Pump type	A Service kit	1 Impeller	2 Cam	3 Camscrew	4 Seal	5 Gasket	6 Endcover	7 Endcover screw	8 Wearplate	9 Shaft	10 Bearing	11 Bearing seal	Clutch or Motor
10-35115-2 Obsolete, can be replaced by 10-35333-01 + 2 pcs clamp 01-43238	F4B-903	09-45587	09-810B-1*	01-45288	01-46794-03	0.2233.010	01-45284	01-45282	0.0279.501	-	01-45193	0.3431.441 ***	0.2233.010	-
10-35118-1	F35B-9	09-45589	09-808B-1*	01-42910	01-46794-03	0.2233.010	01-43240	01-43239	0.0279.501	-	01-45175	-	-	-
10-35118-2	F35B-9	09-45589	09-808B-1*	01-42910	01-46794-03	0.2233.010	01-43240	01-43239	0.0279.501	-	01-45175	-	-	-
10-35122-1 Obsolete, repl. by 10-35211-3	F35B-9	09-45589	09-808B-1*	01-42910	01-46794-03	0.2233.010	01-43240	01-43239	0.0279.501	-	01-45322	-	-	-
10-35124-1	C1AL-3	-	01-35130	-	-	0.2233.010	0.2172.024	01-24150	0.0141.906	-	01-45361	0.3431.748	-	-
10-35124-2 Not in production	C1AL-3	-	01-35130	-	-	0.2233.010	0.2172.024	01-24150	0.0141.906	-	01-45361	0.3431.748	-	-
10-35124-3	C1AL-3	-	01-35130	-	-	0.2233.010	0.2172.024	01-24150	0.0141.906	-	01-45361	0.3431.748	-	-
10-35127-1	F4B-9	09-45587	09-810B-1*	01-42389	01-46794-03	0.2233.010	01-45284	01-45282	0.0279.501	-	01-45353	0.3431.441	0.2233.010 ***	-
10-35127-2 Not in production	F4B-9	09-45587	09-810B-1*	01-42389	01-46794-03	0.2233.010	01-45284	01-45282	0.0279.501	-	01-45353	0.3431.748	0.2233.010 ***	-
10-35127-3	F4B-9	-	09-810B-1*	01-42389	01-46794-03	0.2233.251	01-45284	01-46707	0.0279.501	-	01-46700	0.3431.441	0.2233.010 ***	
10-35127-4	F4B-9	-	09-810B-1*	01-45288	01-46794-03	0.2233.010	01-45284	01-46707	0.0279.501	-	01-46700	0.3431.441	0.2233.010 ***	
10-35141-1	F35B-9	-	09-808B-1*	01-42910	01-46794-03	-	01-43240	01-45359	0.0141.500	01-45087	01-45360	01-45110	-	-
10-35141-2	F35B-902	-	09-808B-1*	01-42415	01-46794-10	-	01-43240	01-45359	0.0141.500	01-45087	01-45360	01-45110	-	-
10-35142-1	F4B-9	-	09-810B-1*	01-42389	01-46794-04	-	01-42391	01-42388-2	0.0141.500	-	01-45398	01-45397	-	-
10-35142-2	F4B-903	-	09-810B-1*	01-45288	01-46794-03	-	01-42391	01-42388-2	0.0141.500	-	01-45398	01-45397	-	-
10-35157-1	F35B-9	09-45589	09-808B-1*	01-42910	01-46794-03	0.2233.010	01-43240	01-43239	0.0279.501	01-45087	01-45556	0.3431.441	0.2233.010 ***	-
10-35157-2	F35B-902	09-45589	09-808B-1*	01-42415	01-46794-10	0.2233.010	01-43240	01-43239	0.0279.501	01-45087	01-45556	0.3431.441	0.2233.010 ***	-
10-35157-3	F35B-9	09-45589	09-808B-1*	01-42910	01-46794-03	0.2233.010	01-43240	01-43239	0.0279.501	01-45087	01-45556	0.3431.441	0.2233.010 ***	-
10-35157-4	F35B-902	09-45589	09-808B-1*	01-42415	01-46794-10	0.2233.010	01-43240	01-43239	0.0279.501	01-45087	01-45556	0.3431.441	0.2233.010 ***	-
10-35157-5 Customer branded	F35B-9	09-45589	09-808B-1*	01-42910	01-46794-03	0.2233.010	01-43240	Cust.brand.	0.0279.501	01-45087	01-45556	0.3431.441	0.2233.010 ***	-
10-35157-6	F35B-9	09-45589	09-808B-1*	01-42910	01-46794-03	0.2233.010	01-43240	01-43239	0.0279.501	01-45087	01-45556	0.3431.441	0.2233.010 ***	-

A - parts no. 1, 4, 5, 7 included ** - gasket included* *** - shaft drive end* **** - included in service kit* ***** - back* ****** - front*

Johnson Flexible Impeller Pumps

Part no.	Pump type	A Service kit	1 Impeller	2 Cam	3 Camscrew	4 Seal	5 Gasket	6 Endcover	7 Endcover screw	8 Wearplate	9 Shaft	10 Bearing	11 Bearing seal	Clutch or Motor
10-35157-7 Obsolete	F35B-902	09-45589	09-808B-1*	01-42415	01-46794-10	0.2233.010	01-43240	01-43239	0.0279.501	01-45087	01-45556	0.3431.441	0.2233.010 ***	-
10-35157-8 Customer branded	F35B-9	09-45589	09-808B-1*	01-42910	01-46794-03	0.2233.010	01-43240	01-43239	0.0279.501	01-45087	01-45556	0.3431.441	0.2233.010 ***	-
10-35157-9	F35B-9 NPTF	-	09-808B-1*	01-42910	01-46794-03	0.2233.010	01-43240	01-43239	0.0279.501	01-45087	01-45556	0.3431.441	0.2233.010 ***	
10-35161-1	F4B-9	09-45587	09-810B-1*	01-42389	01-46794-03	0.2233.010	01-45284	01-45282	0.0279.501	-	01-45832	0.3431.441	0.2233.010 ***	-
10-35167-1	F4B-9	09-45587	09-810B-1*	01-42389	01-46794-03	0.2233.010	01-45284	01-45282	0.0279.501	-	01-45569	0.3431.441	0.2233.010 ***	-
10-35167-2 Obsolete	F4B-902	09-45587	09-810B-1*	01-45084	0.0279.501	0.2233.010	01-45284	01-45282	0.0279.501	-	01-45569	0.3431.441	0.2233.010 ***	-
10-35167-3 Obsolete	F4B-903	09-45587	09-810B-1*	01-45288	01-46794-03	0.2233.010	01-45284	01-45282	0.0279.501	-	01-45569	0.3431.441	0.2233.010 ***	-
10-35180-1 Obsolete	F5B-8021	09-45585	09-1027B-1*	01-45014	0.0279.032	0.2233.001	01-42401	01-42398	0.0279.500	-	Obsolete	0.3431.742	-	-
10-35180-2 Obsolete	F5B-8001	09-45585	09-1027B-1*	01-42397	01-46794-05	0.2233.001	01-42401	01-42398	0.0279.500	-	Obsolete	0.3431.742	-	-
10-35187-1	F35B-9	09-45589	09-808B-1*	01-42910	01-46794-03	0.2233.010	01-43240	01-43239	0.0279.501	01-45087	01-45669	0.3431.441	0.2233.010 ***	-
10-35187-2	F35B-9	09-45589	09-808B-1*	01-42910	01-46794-03	0.2233.010	01-43240	01-43239	0.0279.501	01-45087	01-45669	0.3431.748	0.2233.010 ***	-
10-35187-3	F35B-9	09-45589	09-808B-1*	01-42910	01-46794-03	0.2233.010	01-43240	01-43239	0.0279.501	01-45087	01-45669	0.3431.748	0.2233.010 ***	-
10-35187-4	F35B-9	09-45589	09-808B-01* 09-808B-1*	01-42910	01-46794-03	0.2233.010	01-43240	01-43239	0.0141.700	01-45087	01-45669	0.3431.441	0.2233.010	
10-35205-01	F4B-9	-	09-810B-1*	01-42389	01-46794-04	-	01-42391	01-42388-2	01-46794-12	-	01-45709	01-45397	-	-
10-35205-02	F4B-903	-	09-810B-1*	01-45288	01-46794-03	-	01-42391	01-42388-2	01-46794-12	-	01-45709	01-45397	-	-
10-35205-1 Obsolete, repl by 10-35205-01	F4B-9	-												
10-35205-2 Obsolete, repl by 10-35205-02	F4B-903	-												
10-35211-1	F35B-9	09-45589	09-808B-1*	01-42910	01-46794-03	0.2233.010	01-43240	01-43239	0.0279.501	01-45087	01-45751	0.3431.441	0.2233.010 ***	-

A *- parts no. 1, 4, 5, 7 included* * *- gasket included* ** *- shaft drive end* *** *- included in service kit* **** *- back* ***** *- front*

Johnson Flexible Impeller Pumps

Part no.	Pump type	A Service kit	1 Impeller	2 Cam	3 Camscrew	4 Seal	5 Gasket	6 Endcover	7 Endcover screw	8 Wearplate	9 Shaft	10 Bearing	11 Bearing seal	Clutch or Motor
10-35211-2 Not in production	F35B-902	09-45589	09-808B-1*	01-42415	0.0279.501	0.2233.010	01-43240	01-43239	0.0279.501	01-45087	01-45751	0.3431.441 ***	0.2233.010	-
10-35211-3	F35B-9	09-45589	09-808B-1*	01-42910	01-46794-03	0.2233.010	01-43240	01-43239	0.0279.501	01-45087	01-45353	0.3431.441	0.2233.010 ***	-
10-35211-4 Not in production	F35B-902	09-45589	09-808B-1*	01-42415	0.0279.501	0.2233.010	01-43240	01-43239	0.0279.501	01-45087	01-45353	0.3431.441	0.2233.010 ***	-
10-35211-5	F35B-9	09-45589	09-808B-1*	01-42910	01-46794-03	0.2233.010	01-43240	01-43239	0.0141.500	01-45087	01-45751	0.3431.748	0.2233.010	-
10-35216-1 Obsolete	F4B-9	09-45905	09-810B-1*	01-42389	01-46794-03	0.2233.010	01-45284	01-45282	0.0141.700	-	01-45762	0.3431.441	0.2233.010 ***	
10-35231-1	F5B-9	09-45585	09-1027B-1*	01-42397	01-46794-05	0.2233.001	01-42401	01-42398	0.0279.500	01-42399	01-45187	0.3431.761	-	-
10-35240-1	F4B-9	09-45587	09-810B-1*	01-42389	01-46794-03	0.2233.010	01-45284	01-45282	0.0279.501	-	01-45569	0.3431.441	0.2233.010 ***	-
10-35241-1	F4B-9	09-45587	09-810B-1*	01-42389	01-46794-03	0.2233.010	01-45284	01-45282	0.0279.501	-	01-45556	0.3431.441	0.2233.010 ***	-
10-35241-2	F4B-902	09-45587	09-810B-1*	01-45084	0.0279.501	0.2233.010	01-45284	01-45282	0.0279.501	-	01-45556	0.3431.441	0.2233.010 ***	-
10-35265-1 Obsolete	F4B-9	09-45587	09-810B-1*	01-42389	01-46794-04	-	01-42391	01-42388-2	0.0141.500	-	01-45398	01-45397	-	-
10-35271-01	F4B-9	09-45587	09-810B-1*	01-42389	01-46794-03	0.2233.010	01-45284	01-45282	0.0279.501	-	01-45950	0.3431.441	0.2233.010 ***	-
10-35288-01 Obsolete	F35B-9	09-45589	09-808B-1*	01-42910	01-46794-03	0.2233.010	01-43240	01-43239	0.0279.501	01-45087	01-45993	0.3431.441	0.2233.010 ***	-
10-35288-02 Obsolete	F35B-902	09-45589	09-808B-1*	01-42415	01-46794-10	0.2233.010	01-43240	01-43239	0.0279.501	01-45087	01-45993	0.3431.441	0.2233.010 ***	-
10-35327-01 Not in production	F5B-9	09-45585	09-1027B-1*	01-42397	01-46794-05	0.2233.001	01-42401	01-42398	0.0279.500	01-42399	01-46085	0.3431.761	-	-
10-35327-02 Not in production	F5B-902	09-45585	09-1027B-1*	01-45014	0.0279.032	0.2233.001	01-42401	01-42398	0.0279.500	01-42399	01-46085	0.3431.761	-	-
10-35327-03	F5B-903	09-45585	09-1027B-1*	01-45976	01-46794-05	0.2233.001	01-42401	01-42398	0.0279.500	01-42399	01-46085	0.3431.761	-	-

A *- parts no. 1, 4, 5, 7 included* * *- gasket included* ** *- shaft drive end* *** *- included in service kit* **** *- back* ***** *- front*

Johnson Flexible Impeller Pumps

Part no.	Pump type	A Service kit	1 Impeller	2 Cam	3 Camscrew	4 Seal	5 Gasket	6 Endcover	7 Endcover screw	8 Wearplate	9 Shaft	10 Bearing	11 Bearing seal	Clutch or Motor
10-35333-01	F4B-9	09-45587	09-810B-1*	01-42389	01-46794-03	0.2233.010	01-45284	01-45282	0.0279.501	-	01-45193	0.3431.441	0.2233.010 ***	-
10-35355-01	F4B-9	09-45587	09-810B-1*	01-42389	01-46794-03	0.2233.010	01-45284	01-45282	0.0279.300	-	01-46167	0.3431.441	0.2233.010 ***	-
10-35725-01	F4B-9	09-45587	09-810B-1*	01-42389	01-46794-03	0.2233.010	01-45284	01-45282	0.0141.700	-	01-46460	0.3431.441	0.2233.010 ***	-
10-35731-01	F35B/F35B-9													
10-36006-01 Customer branded	F4B-9	-	09-810B-1*	01-42389	01-46794-03	09-0.2247.021	0.2173.476	01-46007-2	0.0141.700	01-46737-2	01-47065	0.3431.441	-	
10-42864-1 Obsolete	F5B-9	09-45913	09-801B*	01-42397	01-46794-05	0.2233.001	01-42401	Obsolete	01-46794-04	01-42399	Obsolete	-	-	-
20-4941-02 Obsolete	F2P10-220V	09-45594	09-1077B-9*	-	-	0.2233.402/ 0.0357.002	0.2172.506	21-4945	0.0140.001	21-4944 **** 21-4946 *****	-	-	-	Obsolete

A *- parts no. 1, 4, 5, 7 included* * *- gasket included* ** *- shaft drive end* *** *- included in service kit* **** *- back* ***** *- front*

Engine reference list

Engine reference list

A
Ailsa Craig 525
Alaska Diesel 525
Albin Motor 525
Allis Chalmers 525
Ameco Peninsula 525
American Diesel 525
Arona 525
ARS Marine 525

B
Barnes Brinkcraft 525
Bayliner 526
Bedford 526
Beta Marine 526
Blaxland 526
BMW 526
Bomac Marine 526
British Leyland 527
Bukh (Aabenraa) 527
Burioli 527

C
C-Power 527
Caterpillar 528
CMD 528
CT Marine 528
Cummins 528

D
DAF 529
Deere, John 529
Detroit Diesel 529
Diecon 529
Diesel Auto Marin 530
Direct Power Ind. 530
Dolphin Marine 530
Drinkward Motoren 530
DTN-Dieseltechniek 530
Ducati 530

E
Ekstroem 531
Engel, Max 531
Entec West 531

F
F J Fay 531
Farymann 531
Fast Freeze Refr. 532
Fischer Panda 532
Flagship 532
Flamme 532
FNM Diesel 532
Ford 532
Ford Lehman 533
Fredrikstad Motor 533

G
Grassetti 533
Gustavsson Motor, N 533

H
Hardin 533
Hendy Lennox 533
Herald Marine 533
HFL 533
High Power Marine 533
Hino Motors 534
Hydromarine 534

I
Icemaster…see Fischer Panda 534
Indmar 534
Indu Marin 534
Industrimotor 534
Iveco-Aifo 534

K
KOHLER 535
KTT Motor 535

L
Lehman 535
Lister Petter 535
Lombardini 535
Lugger 536

M
M.A.N. 536
Mandals Motorfabrik 536
Marine Craft 536
Marine Exhaust 536
Marine Power 536
Matra 537
Meakes, JG 537
Mercedes 537
Mercraft 537
Mercury Marine 537
Mermaid Marine 537
Mitsubishi 537
Motor Marine Devon 537
Motor og Prop.teknik 537
MTU 537

N
N.E. Ford 538
N.E. Isuzu 538
Nanni 538
Nedalo 538
Norfolk Marine 539

O
Onan Corp 539

P
Panther Marine 539
Pathfinder Marine 539
Peninsular Engines 539
Perkins 539
PKF Marine 540
Pwer Genny 540
PowerGen Pty Ltd 540

R
Rodahl Marin 540
Ruggerini 540

S
Sabb 540
Sabre 541
Scania 541
Schlapkohl 541
Schwarting 541
Sea Wasp 541
Sole Diesel 542
Steyr 542

T
Telva Oy 542
Tempest 542
Thornycroft 542
Tingbrand 543
Toyota 543

U
Union Motor 543
Universal (Medalist) 543

V
Valmet Oy 543
Variant 543
Vasa Motor 543
Vetus den Ouden 543
VM Motori 544
Volvo Penta 545
Vythoulcas 549

W
Watermota 549
Westerbeke 550

Y
Yamaha 550
Yanmar 550
York Power 550

Z
Zenith/Isuzu 550

Manufacturer	Engine Description	JP Pump art. no.	Note	Mounting	JP Impeller art. no.
A					
Ailsa Craig	RF4	10-24070-1		Foot	09-1028B
	RK-Series	10-24070-1		Foot	09-1028B
	RA6	10-24014-1		Flange	09-1028B
	RAB6	10-24209-1		Foot	09-1028B
Alaska Diesel	L6414A	10-24232-1		Flange	09-812B-1
	M4219, L4219	10-24228-1		Flange	09-1027B-1
	M4239, L4239	10-24228-1		Flange	09-1027B-1
	M4276, L4276	10-24228-1		Flange	09-1027B-1
	M439, L439	10-24228-1		Flange	09-1027B-1
	M445, L445	10-24228-1		Flange	09-1027B-1
	M6140A, L6140A	10-24430-01		Flange	09-814B
	M6414, L6414	10-24228-1		Flange	09-1027B-1
	M643	10-24335-01		Flange	09-810B-1
	M668, L668	10-24228-1		Flange	09-1027B-1
	M673	10-24335-01		Flange	09-810B-1
Albin Motor	G62/G62T	10-13021-1		Foot	09-819B
Allis Chalmers	60-AMR-273	10-24070-1		Foot	09-1028B
Ameco Peninsula	V8-379T	10-24316-01		Flange	09-812B-1
American Diesel	4 cyl	10-24140-5		Flange	09-1027B-1
	6 cyl	10-24139-5		Flange	09-1028B
Arona	AD 182L/M	10-35038-2		Foot	09-808B-1
	AD 185M	10-35038-2		Foot	09-806B-1
	AD 190	10-35157-3		Flange	09-808B-1
	AD 190/195M	10-35157-3		Flange	09-808B-1
	AD 195M	10-35157-3		Flange	09-808B-1
	AD 195M/R	10-35038-1		Foot	09-808B-1
	AD 290	–		Flange	09-1026B-1
	AD 295 M	10-35157-3		Flange	09-808B-1
	AD 395	–		Flange	09-1026B-1
	AD 395	10-24119-1		Flange	09-1027B-1
	AD 4100M	10-24119-1		Flange	09-1027B-1
	AD 495	–		Flange	09-1026B-1
	AD 495	10-24073-1		Foot	09-1027B-1
	AD 935PM	10-24074-1		Foot	09-810B-1
	AL 186	–		Flange	09-806B-1
	TA 130	–		Flange	09-819B
	TA 200	–		Flange	09-819B
ARS Marine	Mini D600	10-35038-2		Foot	09-806B-1
	2:05	–		Flange	09-1027B-1
B					
Barnes Brinkcraft	2:02	10-24119-6		Flange	09-1027B-1
	2:05	10-24119-6		Flange	09-1027B-1
		10-24073-1		Foot	09-1027B-1

! Pump art no in brackets = replacement pump A) *Pump discontinued* B) *Only available to manufacturer* ** with flange* *** without flange*

Manufacturer	Engine Description	JP Pump art. no.	Note	Mounting	JP Impeller art. no.
Bayliner	105	10-24253-1		Flange	09-1028B
	W04C-T120/3000	10-24365-02	B)	Flange	09-1028B
	W04D	10-24253-2		Flange	09-1028B
	W06D-T1 250/3000	10-24365-02	B)	Flange	09-1028B
	W06D-T1-11 310/3000	10-24413-02	B)	Flange	09-821B
Bedford	220	10-24210-1		Foot	09-1027B-1
	330	10-24209-1		Foot	09-1028B
Beta Marine	2KC	10-24326-01		Flange	09-810B-1
	BD 722 20 BHP	10-24326-01		Flange	09-810B-1
	BD1005 28 BHP	10-24326-01		Flange	09-810B-1
	Beta 10 - 10hp	10-24629-01		Flange	09-810B-1
	Beta 14 - 13,5hp	10-24629-01		Flange	09-810B-1
	Beta 16 - 16hp	10-24629-01		Flange	09-810B-1
	Beta 20 - 20hp	10-24629-01		Flange	09-810B-1
	Beta 25 - 25hp	10-24629-01		Flange	09-810B-1
	Beta 28 - 28hp	10-24629-01		Flange	09-810B-1
	Beta 35 - 35hp	10-24629-01		Flange	09-810B-1
	Beta 38 - 37,5bhp	10-24629-01		Flange	09-810B-1
	Beta 43 - 43bhp	10-24334-01		Flange	09-1027B-1
	Beta 50 - 50bhp	10-24334-01		Flange	09-1027B-1
	Beta 60 - 58Bhp	10-24334-01		Flange	09-1027B-1
	BF 2803 62 BHP	10-24326-01		Flange	09-810B-1
	BSD 333	10-24244-1		Flange	09-1028B
	BSD 678	10-24244-1		Flange	09-1028B
	BV 1305 32 BHP	–		Flange	09-810B-1
	BV 1505 37.5 BHP	–		Flange	09-810B-1
	BV 1903 43 BHP	–		Flange	09-810B-1
	BV 2203 50 BHP	–		Flange	09-810B-1
	BZ 482 13.5 BHP	–		Flange	09-810B-1
	Dover 2722	10-24139-4		Flange	09-1028B-1
	Dover 2725	10-24139-4		Flange	09-1028B
	Dover 2726 T	10-24139-4		Flange	09-1028B
	Dover 2726 TIM	10-24139-4		Flange	09-1028B
	KC	10-24326-01		Flange	09-810B-1
	KR	10-24326-01		Flange	09-810B-1
	XLD 418	10-24073-1		Foot	09-1027B-1
Blaxland	2 cyl	10-35038-2		Foot	09-808B-1
BMW	410/411	–		Flange	09-1027B-1
	B 130	10-24119-2		Flange	09-1027B-1
	B 190/220	–		Flange	09-1028B
	B 630/635	–		Flange	09-1028B
	D 150/190	10-24127-1		Flange	09-1028B
	D 35/50	10-35333-01+ 2 pcs 01-43238		Flange	09-810B
	D 530TA	10-24127-1		Flange	09-1028B
	D 636TA	10-24127-1		Flange	09-1028B
	D 7/12	10-35091-2		Flange	09-808B-1
Bomac Marine	4 cyl	10-24140-5		Flange	09-1027B-1
	6 cyl	10-24139-5		Flange	09-1028B

! *Pump art no in brackets = replacement pump* A) *Pump discontinued* B) *Only available to manufacturer* * *with flange* ** *without flange*

Manufacturer	Engine Description	JP Pump art. no.	Note	Mounting	JP Impeller art. no.
British Leyland	1:05	10-24073-1		Foot	09-1027B-1
	1:08	10-24073-1		Foot	09-1027B-1
	2:02	10-24073-1		Foot	09-1027B-1
	2:02	10-24119-6		Flange	09-1027B-1
	2:05	10-24119-6		Flange	09-1027B-1
Bukh (Aabenraa)	1G/2G/3G	10-32256-1		Flange	09-1027B-1
	2G/3G 105M	10-32256-1		Flange	09-1027B-1
	4K 105M	–		Flange	09-1028B
	6K 105M	–		Flange	09-1028B
	DV 10 LME/LSME	10-35157-3		Flange	09-808B-1
	DV 10 M	-		Flange	09-806B-1
	DV 10 M	10-35157-3		Flange	09-808B-1
	DV 10 ME/SME	10-35118-1 (10-35157-3)	!	Flange	09-808B
	DV 10 ME/SME	10-35157-3		Flange	09-808B-1
	DV 10 ME/SME	10-35241-1		Flange	09-810B-1
	DV 18 LME/LSME	10-35118-1 (10-35157-3)	!	Flange	09-808B-1
	DV 20	–		Flange	09-806B
	DV 20 M	–		Flange	09-806B-1
	DV 20 M	10-35157-3		Flange	09-808B-1
	DV 20 ME/SME	10-35064-1		Flange	09-1026B
	DV 20 ME/SME	10-35241-1		Flange	09-1026B-1
	DV 20 ME/SME	10-35118-1 (10-35157-3)	!	Flange	09-808B-1
	DV 24 ME/SME	10-35064-1		Flange	09-1026B
	DV 24 ME/SME	10-35241-1		Flange	09-1026B-1
	DV 24 ME/SME	10-35157-3		Flange	09-808B-1
	DV 36 ME/SME	10-24131-2		Flange	09-1027B-1
	DV 48 ME/SME	10-24131-2		Flange	09-1027B-1
	DV8 ME/SME	10-35118-1 (10-35157-3)	!	Flange	09-808B-1
Burioli	2725	10-24139-3		Flange	09-1028B
	2401E	10-24140-1		Flange	09-1027B-1
	2726 TM	10-24139-3		Flange	09-1028B
	2728 TIM	10-24139-3		Flange	09-1028B
	XLD Escort	10-24073-1		Foot	09-1027B-1
C					
C-Power	2500	10-24244-1	A)	Flange	09-1028B
	2720	10-24139-1		Flange	09-1028B
	4.450	10-24451-01		Flange	09-1027B-1
	6.675	10-24445-01		Flange	09-1028B
	2722-series 4 cyl	10-24139-4		Flange	09-1028B
	2725-series 6 cyl	10-24139-4		Flange	09-1028B
	3.323/239	–		Flange	09-1027B-1
	4.120 2,2 litre	10-24119-2		Flange	09-1027B-1
	4.18 1,8 litre	10-24073-1		Foot	09-1027B-1
	4.220	–		Flange	09-1027B-1
	4.254	10-24139-1		Flange	09-1028B
	4.442	–		Flange	09-1027B-1
	4.444	10-24244-1		Flange	09-1028B
	4.90 1,5 litre	10-24073-1		Foot	09-1027B-1
	6.216	10-24139-1		Flange	09-1028B
	6.363TC/TCIC	10-24139-1		Flange	09-1028B
	6.380	–		Flange	09-1027B-1

! *Pump art no in brackets = replacement pump* A) *Pump discontinued* B) *Only available to manufacturer* * *with flange* ** *without flange*

Manufacturer	Engine Description	JP Pump art. no.	Note	Mounting	JP Impeller art. no.
C-Power cont'd	6.380	10-24139-1		Flange	09-1028B
	6.666	10-24244-1		Flange	09-1028B
	6.78LTT.I.	–		Flange	
	BSD 31	10-24244-1	A)	Flange	09-1028B
	BSD 4	10-24244-1	A)	Flange	09-1028B
	BSD 6 cyl	10-24244-1		Flange	09-1028B
Caterpillar		10-13095-01		Flange	09-802B
		10-13021-1		Foot	09-819B
	3208	10-13021-1		Foot	09-819B
	3208	–		Flange	09-1028B
CMD	ATM100	10-24572-01			09-1028B
	AM45	10-24571-01			09-1027B-1
	HPE170/200/250	10-24127-1			09-1028B
	HP80	10-24230-3			09-1027B-1
CT Marine	1-8	10-24073-1		Foot	09-1027B-1
	10-24119-2	10-24119-2		Flange	09-1027B-1
	2-5 FSE	10-24073-1		Foot	09-1027B-1
	22/2.5	10-24119-6		Flange	09-1027B-1
	4.107/108	10-24119-2		Flange	09-1027B-1
	CT 100	10-35098-4		Flange	09-1026B-1
	CT 115 (6.98)	10-24119-6		Flange	09-1027B-1
	CT 120D	10-24140-1		Flange	09-1027B-1
	CT 150	10-24139-1		Flange	09-1028B
	CT 2000D	10-35098-4		Flange	09-1026B-1
	CT 40D 1,5 litre	10-24073-1		Foot	09-1027B-1
	CT 50	10-35098-4		Flange	09-1026B-1
	CT 50D 1,8 litre	10-24073-1		Flange	09-1027B-1
	CT 60D 2,5 litre	10-24119-6		Flange	09-1027B-1
	CT 80	10-35098-4		Flange	09-1026B-1
	CT 80D	10-24140-1		Flange	09-1027B-1
	Dover 2722	10-24140-1		Flange	09-1027B-1
	Dover 2725	10-24139-1		Flange	09-1028B
	FD 120	–		Flange	09-1027B-1
	FD 2000	–		Flange	09-1026B-1
	FD 80	10-24228-1		Flange	09-1027B-1
	LD 115	10-24119-2		Flange	09-1027B-1
	LD 40	–		Flange	09-1027B-1
	LD 50	–		Flange	09-1027B-1
	LD 60	10-24119-2		Flange	09-1027B-1
	XLD	10-24214-4		Flange	09-810B-1
Cummins	M(T)-855-M	–		Flange	09-819B
	M(TA)855-M	–		Flange	09-819B
	M(TA)855-M	–		Flange	09-819B
	V(T)555M	–		Flange	09-819B
	V(TA)-1710-M	–		Flange	09-819B
	V504M	–		Flange	09-1028B
	V903	–		Flange	09-819B
	VT-555-M-BC	–		Flange	09-819B
	VT8-370-M LH	–		Flange	09-819B
	VT903	–		Flange	09-819B
	VTA903	–		Flange	09-819B

! *Pump art no in brackets = replacement pump* A) *Pump discontinued* B) *Only available to manufacturer* * *with flange* ** *without flange*

Manufacturer	Engine Description		JP Pump art. no.	Note	Mounting	JP Impeller art. no.
D						
DAF	D 600		10-24096-3	A)	Flange	09-819B
	D 620		10-13024-5	A)	Foot	09-819B
	DF 615MY		–		Flange	09-1027B-1
	DK 1160MY		10-21915-2		Flange	09-819B
	DKS 1160M		10-24096-4		Flange	09-819B
	DKT 1160		10-24096-2		Flange	09-819B
	DKV 1160M		10-24096-4		Flange	09-819B
	DKVD 1160M		10-24096-4		Flange	09-819B
	DP 680M		–		Flange	09-1028B
	DS 575M		–		Flange	09-1028B
	DT 575MY		10-24209-1		Foot	09-1028B
	DT 615MY		10-24209-1		Foot	09-1028B
Deere, John	4039D and 4045T	RE47016	10-24398-01		Flange	09-1028B
	4039D and 4045T	RE49556	10-24428-01		Crankshaft	09-1028B
	PowerTech 4.5L, 4045DFM70/TFM75	RE503068	10-24398-02		Flange	09-1028B
	PowerTech 4.5L, 4045DFM70/TFM75	RE525563 (Replaces RE503068)	10-24753-01 (Replaces 10-24398-02)		Flange	09-1028B
	Powertech 6.8L 6068TFM75/TFM76	RE525563	10-24753-01		Flange	09-1028B
	Powertech 6.8L 6068TFM75/TFM76	RE503068 (Replaced by RE525563)	10-24398-02 (Replaced by 10-24753-01)		Flange	09-1028B
	RE47016		10-24398-01		Flange	09-1028B
	RE49556		10-24428-01		Flange	09-1028B
Detroit Diesel	653		10-13096-01*/10-13096-02**		Flange	09-819B
	671		10-13096-01*/10-13096-02**		Flange	09-819B
	853		10-13096-01*/10-13096-02**		Flange	09-819B
	671 TI		10-13095-01*/10-13095-02**		Flange	09-814B
	871		10-13095-01*/10-13095-02**		Flange	09-814B
	1271		10-13095-01*/10-13095-02**		Flange	09-814B
Diecon	3TNE78		10-24334-01		Flange	09-1027B-1
	3TNE84-88		10-24334-01		Flange	09-1027B-1
	4TNE84-88		10-24334-01		Flange	09-1027B-1
	4TNE94-98		10-24334-01		Flange	09-1027B-1
	D1105		10-24514-01		Flange	09-810B-1
	D1403		10-24334-01		Flange	09-1027B-1
	D1703		10-24334-01		Flange	09-1027B-1
	D850 (Circ Pump)		10-35211-3		Flange	09-808B-1
	D850 (Raw Water)		10-24341-01		Flange	09-810B-1
	D905		10-24514-01		Flange	09-810B-1
	D950		10-24341-01		Flange	09-810B-1
	ED 33		10-24073-1		Foot	09-1027B-1
	ED 6		10-24277-3		Flange	09-1028B
	F2803		10-24334-01		Flange	09-1027B-1
	FD35		10-24571-01		Foot	09-1027B-1
	FE6		10-24127-1D		Flange	09-1028B
	SD 23		10-24334-01		Flange	09-1027B-1
	TD27		10-24334-01		Flange	09-1027B-1
	V2203		10-24334-01		Flange	09-1027B-1
	VH1200		10-24341-01		Flange	09-810B-1
	Z600 (Circ Pump)		10-35211-3		Flange	09-808B-1
	Z600 (Raw Water)		10-24341-01		Flange	09-810B-1

! *Pump art no in brackets = replacement pump* A) *Pump discontinued* B) *Only available to manufacturer* * *with flange* ** *without flange*

Manufacturer	Engine Description	JP Pump art. no.	Note	Mounting	JP Impeller art. no.
Diesel Auto Marin	Damas	10-24140-1		Flange	09-1027B
Direct Power Ind.	45A1	10-24325-01		Flange	09-819B
Dolphin Marine	2722 4 cyl	10-24140-3		Flange	09-1027B-1
	2725 6 cyl	10-24140-3		Flange	09-1027B-1
	2726TIM 6 cyl	10-24139-3		Flange	09-1028B
	2726TM 6 cyl	10-24139-3		Flange	09-1028B
	Adhara	10-24139-3		Flange	09-1028B
	Altair	10-24073-1		Foot	09-1027B-1
	Altair II	10-24073-1		Foot	09-1027B-1
	Baby Dolphin	10-35098-2		Flange	09-1026B-1
	Escort 1.6	10-24073-1		Foot	09-1027B-1
	FSD 2.5	10-24070-1		Foot	09-1028B
	Hadar II	10-24119-2		Flange	09-1027B-1
	Hydra	–		Flange	09-1026B-1
	Merak	10-24140-3		Flange	09-1027B-1
	Merak II	–		Flange	09-1027B-1
	Nimbus	–		Flange	09-1026B-1
	Saiph	–		Flange	09-1027B-1
	Saiph 3	10-24140-3		Flange	09-1027B-1
	Saiph II	10-24140-3		Flange	09-1027B-1
	Saturn	–		Flange	09-1026B-1
	Sinus	10-35098-2		Flange	09-1026B-1
	Sinus	10-35098-2		Flange	09-1026B-1
	Sirius	10-35098-2		Flange	09-1026B-1
	Super AV	10-35098-2		Flange	09-1026B-1
	Super Saiph 3	10-24139-3		Flange	09-1028B
	Super Saiph II	10-24139-1		Flange	09-1028B
	Vega	10-24070-1		Foot	09-1028B
	Vega II	10-24119-2		Flange	09-1027B-1
Drinkward Motoren	DA475	10-24070-1		Foot	09-1028B
	DD575	10-24070-1		Foot	09-1028B
	DF615	10-24070-1		Foot	09-1028B
	K 3D/4C	10-35100-1		Foot	09-1027B-1
	K2 AS	10-35038-1		Foot	09-808B-1
	KE 75	10-35100-1		Flange	09-1027B-1
	OM 314	10-24210-1		Foot	09-1027B-1
	OM 352	10-24209-1		Foot	09-1028B
	OM 352A	10-24209-1		Foot	09-1028B
	OM 615	10-35100-1		Flange	09-1027B-1
	OM 616/617	10-24127-1		Flange	09-1028B
	OM 621/636	10-35100-1		Flange	09-1027B-1
DTN-Dieseltechniek	DTP 50	10-42864-1	A)	Flange	09-801B
	DTP 62	10-42864-1	A)	Flange	09-801B
	DTR 40/50	10-42864-1	A)	Flange	09-801B
	X4M 88A	10-24119-2		Flange	09-1027B-1
	X6M 88A	–		Flange	09-1028B
Ducati	21S/21S593	10-24073-1		Foot	09-1027B-1
	DM 184	10-35038-1		Foot	09-808B-1
	DM 284	10-35038-1		Foot	09-808B-1
	DM 284 HD78	10-35067-1		Flange	09-801B

! *Pump art no in brackets = replacement pump* A) *Pump discontinued* B) *Only available to manufacturer* * *with flange* ** *without flange*

Manufacturer	Engine Description	JP Pump art. no.	Note	Mounting	JP Impeller art. no.
Ducati cont'd	DM 286	10-35157-3		Flange	09-808B-1
	GAE 186	10-35157-3		Flange	09-808B-1
	IS 16/20	10-35157-3		Flange	09-808B-1
	IS 184/186	10-35157-3		Flange	09-808B-1
	IS 284/286	10-35157-3		Flange	09-808B-1
	IS 9/11	10-35157-3		Flange	09-808B-1
E					
Ekstroem	4 DQ50	10-24127-1		Flange	09-1028B
	K 2AS	10-35038-1		Foot	09-808B-1
	K 2C	10-35167-1		Flange	09-810B-1
	K 3E/4E	10-35167-1		Flange	09-810B-1
	K 3M	10-35167-1		Flange	09-810B-1
	KE 75	10-35167-1		Flange	09-810B-1
	S 4E2	10-24127-1		Flange	09-1028B
	S 6E2	10-24127-1		Flange	09-1028B
Engel, Max	A 560-2W	10-35127-1		Flange	09-810B-1
	A 30M	10-35038-1		Foot	09-808B-1
	A 40M	10-35038-1		Foot	09-808B-1
	A 560	10-35187-1		Flange	09-808B-1
	FK 2M	–		Flange	09-808B-1
	FK 3	10-35127-1		Flange	09-810B-1
	FK 600M	–		Flange	09-808B-1
	FK 850	10-35127-1		Flange	09-810B-1
	K 34A/K 34M	10-35187-1		Flange	09-808B-1
	L 30M	10-35038-1		Foot	09-808B-1
	M 560-2W	10-35127-1		Flange	09-810B-1
	M 559-2 W	10-35127-1		Flange	09-810B-1
	M 560-1	10-35187-1		Flange	09-808B-1
	R 30 M	10-24074-1		Foot	09-810B-1
	S 30M	10-24074-1		Foot	09-810B-1
Entec West	4,2 kW	10-35731-01		Flange	09-808B-1
F					
F J Fay	D950	10-24341-01		Flange	09-810B-1
	D905BG2	10-24514-01		Flange	09-810B-1
	2400	10-35211-3		Flange	09-808B-1
	V1902BG2	10-24119-2		Flange	09-1027B-1
	F2803EBG	10-24127-10		Flange	09-1028B
	D850	10-35211-3		Flange	09-808B-1
Farymann	A 30M	10-35038-1		Foot	09-808B-1
	A 40M	10-35038-1		Foot	09-808B-1
	CS	–		Flange	09-1026B-1
	DS/ES/GS	–		Flange	09-806B-1
	FK 2	–		Flange	09-808B-1
	FK 3	10-35127-1		Flange	09-810B-1
	K 30M	–		Flange	09-806B-1
	K 34	10-35038-1		Foot	09-808B-1
	K 34	10-35187-1		Flange	09-808B-1
	K 34	10-24074-1		Foot	09-810B-1

! *Pump art no in brackets = replacement pump* A) *Pump discontinued* B) *Only available to manufacturer* * *with flange* ** *without flange*

Manufacturer	Engine Description	JP Pump art. no.	Note	Mounting	JP Impeller art. no.
Farymann cont'd	L 30M	10-35038-1		Foot	09-808B-1
	P 30M	10-24074-1		Foot	09-810B-1
	R 30M	10-24074-1		Foot	09-810B-1
	S 30M	10-24074-1		Foot	09-810B-1
Fast Freeze Refr.	Model 16	10-35038-2		Foot	09-808B-1
	Model 25	10-35038-1		Foot	09-808B-1
	Model 33	10-24074-1		Foot	09-810B-1
	Model 50	10-24074-1		Foot	09-810B-1
Fischer Panda	Panda 12 000 NE PMS Kubota	10-35127-3		Foot	09-810B-1
	Panda 14 000 Ne PMS Kubota	10-24569-55		Foot	09-808B-1
	Panda 3.8 ND PMS FAR	10-24569-55		Foot	09-808B-1
	Panda 4.5 ND PMS FAR	10-24569-55		Foot	09-808B-1
	Panda 4500 FCB PMS FAR	10-24569-55		Foot	09-808B-1
	Panda 4500 SCB PMS FAR	10-24569-55		Foot	09-808B-1
	Panda 4500 SCE PMS FAR	10-24569-55		Foot	09-808B-1
	Panda 5000 LPE PMS Kubota	10-24569-55		Foot	09-808B-1
	Panda 6000 ND PMS Kubota	10-35127-3		Foot	09-810B-1
	Panda 8000 NE PMS Kubota	10-35127-3		Foot	09-810B-1
	Panda 9000 ND PMS Kubota	10-35127-3		Foot	09-810B-1
	Panda PMS 10 KUB	10-24074-14		Foot	09-1026B-1
	Panda PMS 12 KUB	10-24074-14		Foot	09-1026B-1
	Panda PMS 15 KUB	10-24073-1		Foot	09-1027B-1
	Panda PMS 20 KUB	10-24073-1		Foot	09-1027B-1
	Panda PMS 25 KUB	10-24073-1		Foot	09-1027B-1
	Panda PMS 3 FAR	10-35038-8		Foot	09-80B-1
	Panda PMS 30 KUB	10-24073-1		Foot	09-1027B-1
	Panda PMS 4 FAR	10-35038-8		Foot	09-808B-1
	Panda PMS 40 MB	10-24073-1		Foot	09-1027B-1
	Panda PMS 50 MB	10-24073-1		Foot	09-1027B-1
	Panda PMS 6 KUB	10-24074-14		Foot	09-1026B-1
	Panda PMS 8 KUB	10-24074-14		Foot	09-1026B-1
	FAR = Faryman KUB = Kubota MB = Mercedes Benz				
Flagship	350	10-24228-1		Flange	09-1027B-1
	454	10-24232-1		Flange	09-812B-1
Flamme	D430	10-35038-1		Foot	09-808B-1
FNM Diesel	FNM 1,3 A.T.I.	10-24073-1		Foot	09-1027B-1
Ford	2400	10-22355-1	A)	Flange	09-1027B-1
	2722	10-24140-3		Flange	09-1027B-1
	2723	10-24139-3		Flange	09-1028B
	2725	10-24139-3		Flange	09-1028B
	2401E	10-22355-1	A)	Flange	09-1027B-1
	2700 Turbo	10-24139-1		Flange	09-1028B
	2701E	10-24140-1		Flange	09-1027B-1
	2704E	10-24140-1		Flange	09-1027B-1
	2704ET	10-24140-1		Flange	09-1027B-1
	2704ET	10-24139-1		Flange	09-1028B
	2704ETA	10-24140-1		Flange	09-1027B-1
	2711E	10-24140-1		Flange	09-1027B-1

! *Pump art no in brackets = replacement pump* A) *Pump discontinued* B) *Only available to manufacturer* * *with flange* ** *without flange*

Manufacturer	Engine Description	JP Pump art. no.	Note	Mounting	JP Impeller art. no.
Ford cont'd	2713E	10-24140-1		Flange	09-1027B-1
	2714E	10-24140-1		Flange	09-1027B-1
	2726T	10-24139-3		Flange	09-1028B
	2726TIM	10-24139-3		Flange	09-1028B
	2726TM	10-24139-3		Flange	09-1028B
	2728TIM	10-24139-3		Flange	09-1028B
	BSD 333/444/666	10-24244-1		Flange	09-1028B
	FSD 425	10-24073-1		Foot	09-1027B-1
	FSD 425A Transit	10-24119-2		Flange	09-1027B-1
	FSD 425B	–		Flange	09-1027B-1
	XLD 416 Escort	10-24290-1		Flange	09-810B-1
Ford Lehman	4D50/4D61	10-24119-5		Flange	09-1027B-1
Fredrikstad Motor	S15	10-35157-4		Flange	09-808B-1
	S2/S22	10-32588-1	A)	Flange	09-1026B-1
G					
Grassetti	FM 10	10-35157-3		Flange	09-808B-1
Gustavsson Motor, N	2704 ET	10-24139-3		Flange	09-1028B
	2710-15	10-24140-1		Flange	09-1027B-1
	2722-25	10-24140-1		Flange	09-1027B-1
	2726 TM	10-24139-3		Flange	09-1028B
	2728 TIM	10-24139-3		Flange	09-1028B
H					
Hardin	V8	10-24232-1		Flange	09-812B-1
Hendy Lennox	2720	10-24139-1		Flange	09-1028B
	BSD 666TI	10-24244-1		Flange	09-1028B
Herald Marine	2:12	–		Flange	09-806B-1
	4:50	10-24119-4		Flange	09-1027B-1
	3.18/22	–		Flange	09-806B-1
	4.120T	10-24073-1		Foot	09-1027B-1
	0,229	10-24073-1		Foot	09-1027B-1
	6.150/170	10-24014-1		Flange	09-1028B
	6.178T	10-24014-1		Flange	09-1028B
	6.200/265T	10-13024-1		Foot	09-819B
	8.292/372	–		Flange	09-819B
	Magnum 300	10-24014-1		Flange	09-1028B
HFL	Petter	10-35038-1		Foot	09-808B-1
High Power Marine	2:05	10-24073-2	A)	Foot	09-1027B-1
	2:05	10-24119-6		Flange	09-1027B-1
	2712E	10-24140-1		Flange	09-1027B-1
	2715E	10-24139-1		Flange	09-1028B
	2722E	10-24139-4		Flange	
	2725E	10-24139-4		Flange	
	4.108	10-24119-2		Flange	09-1027B-1
	4.236	10-24215-1	A)	Flange	09-1027B-1

! *Pump art no in brackets = replacement pump* A) *Pump discontinued* B) *Only available to manufacturer* * *with flange* ** *without flange*

Manufacturer	Engine Description	JP Pump art. no.	Note	Mounting	JP Impeller art. no.
Hino Motors	W04C-T	10-24253-3	B)	Flange	09-1028B
	W04C-T120/3000	10-24365-02	B)	Flange	09-1028B
	W04D	10-24253-2		Flange	09-1028B
	W06D-T1 250/3000	10-24365-02	B)	Flange	09-1028B
	W06D-T1-11 310/3000	10-24413-02	B)	Flange	09-821B-1
Hydromarine	DM12	10-35157-3		Flange	09-808B-1
	DM17/DM25	10-35098-4		Flange	09-1026B-1

I

Icemaster…see Fischer Panda

Indmar	200	10-24228-1		Flange	09-1027B-1
	250, 285, 285R11	10-24232-5		Flange	09-812B-1
	5.7L Assault 310	10-24232-1B		Crankshaft	09-812B-1
	5.7L Carbureted Vortec	10-24232-1B		Crankshaft	09-812B-1
	5.7L EFI MPFI	10-24232-1B		Crankshaft	09-812B-1
	6.0L MPFI	10-24232-1B		Crankshaft	09-812B-1
	6.2L MPFI	10-24232-1B		Crankshaft	09-812B-1
	7.4 L Engine	10-24232-1B		Crankshaft	09-812B-1
	8.1L Egines	10-24232-1B		Crankshaft	09-812B-1
	8.2L Engines	10-24232-1B		Crankshaft	09-812B-1
	Assault 325	10-24232-1B		Crankshaft	09-812B-1
	Indmar 454 Carbureted	10-24232-1B		Crankshaft	09-812B-1
	Indmar 5.7L Assault 340	10-24232-1B		Crankshaft	09-812B-1
	Indmar 5.7L HO	10-24232-1B		Crankshaft	09-812B-1
	Indmar 502 Carbureted	10-24232-1B		Crankshaft	09-812B-1
	Indmar 8.1L Vortec	10-24232-1B		Crankshaft	09-812B-1
	LTI, TBI	10-24232-7	A)	Flange	09-812B-1
	Malibu 383 Hammerhead	10-24232-1B		Crankshaft	09-812B-1
	Malibu 5.7L LCR	10-24232-1B		Crankshaft	09-812B-1
	Malibu 8.1L Vortec	10-24232-1B		Crankshaft	09-812B-1
	Malibu Anniversary Edition (LS7)	10-24232-1B		Crankshaft	09-812B-1
	Malibu Monsoon	10-24232-1B		Crankshaft	09-812B-1
	Mastercraft 5.7L RTP-1	10-24232-1B		Crankshaft	09-812B-1
	Mastercraft 6.0L LY6	10-24232-1B		Crankshaft	09-812B-1
	Mastercraft 8.1L Vortec	10-24232-1B		Crankshaft	09-812B-1
	Mastercraft MCX	10-24232-1B		Crankshaft	09-812B-1
Indu Marin	2704 ET	10-24139-3		Flange	09-1028B-1
	2710-15	10-24140-1		Flange	09-1027B-1
	2722-25	10-24140-1		Flange	09-1027B-1
	2726 TM	10-24139-3		Flange	09-1028B
	2728 TIM	10-24139-3		Flange	09-1028B
Industrimotor	3KC1M	10-35098-2		Flange	09-1026B-1
	3KC1M	–		Flange	09-810B-1
Iveco-Aifo	513	–		Flange	09-1028B
	514/600	–		Flange	09-806B-1
	804 AM/M	10-24119-2		Flange	09-1027B-1
	8041 M/SM	10-24119-2		Flange	09-1027B-1
	8041 SRM	10-24119-2		Flange	09-1027B-1
	806 AM/M	10-24119-2		Flange	09-1027B-1

! *Pump art no in brackets = replacement pump* A) *Pump discontinued* B) *Only available to manufacturer* * *with flange* ** *without flange*

Manufacturer	Engine Description	JP Pump art. no.	Note	Mounting	JP Impeller art. no.
Iveco-Aifo cont'd	806 SM	10-24014-1		Flange	09-1028B
	8060 MSD	10-24014-1		Flange	09-1028B
	8061 M	10-24014-1		Flange	09-1028B
	8061 SM/SRM	10-24014-1		Flange	09-1028B
	8141 M/SM	–		Flange	09-1027B-1
	821 M	10-24014-1		Flange	09-1028B
	8210 M	–		Flange	09-1028B
	8220 M	10-24014-1		Flange	09-1028B
	828 Mtca	–		Flange	09-819B
	8280 M/SRM	–		Flange	09-1028B
	8281 SRM44	–		Flange	09-814B
	8361 M/SM	10-24014-1		Flange	09-1028B
	8361 SRM	10-24014-1		Flange	09-1028B
	CO 2DM	–		Flange	09-1028B
	CO 3M	10-24014-1		Flange	09-1028B
	CO 3M/SM	10-24119-2		Flange	09-1027B-1
	CP 3M	10-24119-2		Flange	09-1027B-1
	CP 3M/SM	10-24014-1		Flange	09-1028B
	OMCP 3M	–		Flange	09-1028B
	UNO M20	–		Flange	09-1026B-1
	UNO M40	–		Flange	09-1027B-1
K					
KOHLER	40EOZ/33EFOZ	10-24753-01		Flange	09-1028B
	65EOZ/55EFOZ	10-24753-01		Flange	09-1028B
	80EOZ/70EFOZ	10-24753-01		Flange	09-1028B
	99EOZ/80EFOZ	10-24753-01		Flange	09-1028B
KTT Motor	KTT 2000	10-24119-7		Flange	09-1027B-1
	KTT 3000	10-24119-7		Flange	09-1027B-1
L					
Lehman	4D 50/4D 61	10-24119-5		Flange	09-1027B-1
Lister Petter	2722 CS4	10-24139-4		Flange	09-1028B
	2725 CS6	10-24139-4		Flange	09-1028B
	LPW2	10-35241-2		Flange	09-810B-1
	LPW3	10-35241-1		Flange	09-810B-1
	LPW4	10-35327-03		Flange	09-1027B-1
Lombardini	LDW 1003 M	10-35098-4		Flange	09-1026B-1
	LDW 1204 M	10-35098-4		Flange	09-1026B-1
	LDW 1204 M	10-35098-4		Flange	09-1026B-1
	LDW 1204 MD	10-24475-01		Flange	09-1028B
	LDW 1204 Turbo	10-24475-01		Flange	09-1028B
	LDW 1404 M	10-35098-4		Flange	09-1026B-1
	LDW 1503 M	10-35355-01		Flange	09-810B-1
	LDW 1603 M	10-35355-01		Flange	09-810B-1
	LDW 2004 M	10-24475-01		Flange	09-1028B
	LDW 2004 M	10-35355-01		Flange	09-810B-1
	LDW 2004 MD	10-24475-01		Flange	09-1028B
	LDW 2204 M	10-35355-01		Flange	09-810B-1

! *Pump art no in brackets = replacement pump* A) *Pump discontinued* B) *Only available to manufacturer* * *with flange* ** *without flange*

Manufacturer	Engine Description	JP Pump art. no.	Note	Mounting	JP Impeller art. no.
Lombardini cont'd	LDW 2204 MD	10-24475-02		Flange	09-1028B
	LDW 401 M	10-35038-1		Flange	09-808B-1
	LDW 502 M	10-35098-4		Flange	09-1026B-1
	LDW 602 M	10-35098-4		Flange	09-1026B-1
	LDW 702 M	10-35098-4		Flange	09-1026B-1
	LDW 903 M	10-35098-4		Flange	09-1026B-1
Lugger	L-6414A	10-24126-2		Flange	09-1028B
M					
M.A.N.	D 0826LE40	10-24292-01		Flange	09-1028B
	D 2540MLE	10-24239-2		Flange	09-802B
	D 2542LE	10-13064-2		Flange	09-802B/09-1028B
	D 2840LXE/LE401	10-13064-2		Flange	09-802B/09-1028B
	D 2840LXE/LE401	10-24239-2		Flange	09-802B
	D 2840LXE/LE401	10-13064-2		Flange	09-802B/09-1028B
	D 2840LXE/LE401/403	10-13064-01		Flange	09-802B/09-1028B
	D 2840LXE/LE401/403	10-24239-01		Flange	09-802B
	D 2842LE	10-13064-01		Flange	09-802B/09-1028B
	D 2842LE	10-24239-01		Flange	09-802B
	D 2842LE401/02/06/03/08	10-24239-01		Flange	09-802B
	D 2842LE/LXE/LYE/LZE	10-13165-01		Flange	09-820B
	D 2842LYE/LZE	10-24239-01		Flange	09-802B
	D 2842LYE/LZE, LE401/02/ 06/03/0	10-13064-01		Flange	09-802B/09-1028B
	D 2842LYE/LZE, LE401/02/ 06/03/0	10-13165-01		Flange	09-820B
	D 2842ME	10-13165-01		Flange	09-820B
	D 2842LE406/40x	10-13165-01		Flange	09-820B
	D 2848LE/LXE	10-24239-2		Flange	09-802B
	D 2848LXE/LE/LE401/403	10-13064-01		Flange	09-802B/09-1028B
	D 2848LXE/LE/LE401/403	10-24239-01		Flange	09-802B
	D 2866LE/401	10-13142-01	B)	Flange	09-821B/09-1028B
	D 2866LE/401	10-13142-01	B)	Flange	09-821B/09-1028B
	D 2866LE/401	10-13142-01	B)	Flange	09-821B/09-1028B
	D 2866LE/401/402	10-13142-01		Flange	09-821B/09-1028B
	W 3V 17,5/22A	10-13021 1/2 cam		Flange	09-819B
	W 5V 17,5/22A	–		Flange	09-819B
	W 6V 17,5/22A	–		Flange	09-819B-9
Mandals Motorfabrik	D 8	10-35157-3		Flange	09-808B-1
	MB 10	10-35157-3		Flange	09-808B-1
Marine Craft	2401-2E	10-22355-1	A)	Flange	09-1027B-1
	2653-5E HC	10-24070-1		Foot	09-1028B
	V 8	10-22355-1	A)	Flange	09-1027B-1
Marine Exhaust	4 cyl	10-24228-1		Flange	09-1027B-1
Marine Power	350	10-24228-6		Flange	09-1027B-1
	351	10-24232-6		Flange	09-812B-1
	454	10-24232-6		Flange	09-812B
	Ford 351	10-24232-6		Flange	09-812B-1
	4 cyl	10-24073-10 (Keyway)		Foot	09-1027B-1
	4 cyl	10-24073-5		Foot	09-1027B-1
	4 cyl	10-24073-5 (Keyway)		Foot	09-1027B-1

! *Pump art no in brackets = replacement pump* A) *Pump discontinued* B) *Only available to manufacturer* * *with flange* ** *without flange*

Manufacturer	Engine Description	JP Pump art. no.	Note	Mounting	JP Impeller art. no.
Matra	XD2P	10-24119-2		Flange	09-1027B-1
	XD2PS Turbo	10-24119-2		Flange	09-1027B-1
Meakes, JG	1 cyl	10-35038-1		Foot	09-808B-1
	JGM 1500D (1,5 l)	10-24073-1		Foot	09-1027B-1
	JGM 1800 (1,8 l)	10-24073-1		Foot	09-1027B-1
	JGM 2500D (2,5 l)	10-24119-2		Flange	09-1027B-1
	JGM 4150D	10-24139-1		Flange	09-1028B
	JGM 6220D	10-24139-1		Flange	09-1028B
Mercedes	OM 636	10-24119-2		Flange	09-1027B-1
	OM 314	10-24210-1		Foot	09-1027B-1
	OM 352, 355, 360, 401, 402	10-24209-1		Foot	09-1028B
	OM 403, 404	10-13024-1		Foot	09-819B
	OM 424	10-13026-1		Foot	09-814B
Mercraft	150/180	10-24139-1		Flange	09-1028B
Mercury Marine	4 cyl	10-24253-1		Flange	09-1028B
Mermaid Marine	397	10-24139-1		Flange	09-1028B
	595	10-24139-1		Flange	09-1028B
	2722 4 cyl	10-24139-4		Flange	09-1028B
	2723 4 cyl	10-24139-4		Flange	09-1028B
	2724 4 cyl	10-24139-4		Flange	09-1028B
	2725 4 cyl	10-24139-4		Flange	09-1028B
	2726 6 cyl	10-24139-4		Flange	09-1028B
	2727 6 cyl	10-24139-4		Flange	09-1028B
	2728 6 cyl	10-24139-4		Flange	09-1028B
	595 TP	–		Flange	09-1028B
	Flat Four	10-24139-1		Flange	09-1028B
	Flat Six	10-24139-1		Flange	09-1028B
	FSE 425	10-24230-3		Flange	09-1027B-1
	Majestic	10-24139-4		Flange	09-1028B
	Manta	10-24244-2		Flange	09-1028B
	Mariner	10-24139-1		Flange	09-1028B
	Meermin	10-24073-1		Foot	09-1027B-1
	Melody	10-24139-4		Flange	09-1028B
	Merlin	10-24073-1		Foot	09-1027B-1
	Meteor	10-24290-1		Flange	09-810B-1
	Meteorite	10-24290-1		Flange	09-810B-1
	Minuet	10-24073-1		Foot	09-1027B-1
	Mistral	10-24139-4		Flange	09-1028B
	Monarch	10-24139-4		Flange	09-1028B
	Turbo Four	10-24139-1		Flange	09-1028B
	Turbo Plus	10-24139-4		Flange	09-1028B
Mitsubishi	S6M3	10-13171-01	B)	Foot	09-814B
Motor Marine Devon	VW4	–		Flange	09-808B-1
	VW6	10-24225-1		Flange	09-1027B-1
Motor og Prop.teknik	XD3PP.62HK	10-24119-5		Flange	09-1027B-1
MTU	6R 099 TE61, 91, 51	10-13088-01		Flange	09-819B
	Series 183	10-13080-01		Flange	09-814B

! *Pump art no in brackets = replacement pump* A) *Pump discontinued* B) *Only available to manufacturer* ** with flange* *** without flange*

Manufacturer	Engine Description	JP Pump art. no.	Note	Mounting	JP Impeller art. no.
N					
N.E. Ford	6 cyl	10-24139-5		Flange	09-1028B
N.E. Isuzu	6 cyl	10-24070-5		Foot	09-1028B
	6 cyl	10-24071-17		Foot	09-1028B
Nanni	2.40 HE	10-35211-3		Flange	09-810B
	2.50 HE	10-35725-01	B)	Flange	09-810B
	2.60 HE	10-35127-1		Flange	09-810B
	3.110 HE	10-24334-01		Flange	09-1027B-1
	3.75 HE	10-35725-01	B)	Flange	09-810B-1
	3.90 HE	10-35127-1		Flange	09-810B-1
	4.110 HE	10-24334-01		Flange	09-1027B-1
	4.110 L	10-24119-4		Flange	09-1027B-1
	4.150 HE	10-24334-01		Flange	09-1027B-1
	4.190 HE	10-24334-01		Flange	09-1027B-1
	4.220 HE	10-24386-01		Flange	09-1028B
	5.280 HE	10-24386-01		Flange	09-1028B
	6.280 HE	10-24386-01		Flange	09-1028B
	D 2840 LE	10-24239-2		Flange	09-802B
	D 2842 LE	10-24239-2		Flange	09-802B
	D 2842 LXE	10-24239-2		Flange	09-802B
	D 2842 LYE	10-24239-2		Flange	09-802B
	D 2848 LE	10-24239-2		Flange	09-802B
	D 2866 LE	10-24239-2		Flange	09-802B
	D 2866 TE	10-24239-2		Flange	09-802B
	1300	10-13024-1		Foot	09-819B
	1600	10-13024-1		Foot	09-819B
	2100	10-13026-1		Foot	09-802B
	2100 T	10-13026-1		Foot	09-802B
	4.180	10-24119-4		Flange	09-1027B-1
	4.230/4.240	10-24179-1		Flange	09-1028B
	4.380	10-24179-2		Flange	09-1028B
	5.300 T	10-24179-2		Flange	09-1028B
	6.570 6/6.570 T	10-24070-3		Flange	09-1028B
	5250 TDi	10-24542-01		Flange	09-1028B
	K 34	10-35038-1		Foot	09-808B-1
	K.L.A.	10-35039-1	A)	Flange	09-806B-1
	K.L.A.	10-35052-1		Flange	09-808B-1
	L 30	10-35038-1		Foot	09-808B-1
	MB 180	10-24119-2		Flange	09-1027B-1
	MB 220	10-24119-3	A)	Flange	09-1027B-1
	MB 300	10-24119-2		Flange	09-1027B-1
	MB 300	10-24061-		Flange	09-1027B-1
	P 30	10-24074-1		Foot	09-810B-1
	P 30	10-35127-1		Flange	09-810B-1
	R 30	10-24074-1		Foot	09-810B-1
Nedalo	2712	10-24140-1		Flange	09-1027B-1
	2715	10-24139-1		Flange	09-1027B-1
	2401E	10-22355-2	A)	Flange	09-1027B-1
	2402E	10-22355-1	A)	Flange	09-1027B-1
	2712E	10-24139-2	A)	Flange	09-1028B
	2715E	10-24139-1		Flange	09-1028B

! *Pump art no in brackets = replacement pump* A) *Pump discontinued* B) *Only available to manufacturer* * *with flange* ** *without flange*

Manufacturer	Engine Description	JP Pump art. no.	Note	Mounting	JP Impeller art. no.
Norfolk Marine	2722	10-24140-3		Flange	09-1027B-1
	2723	10-24139-3		Flange	09-1028B
	XLD	10-24073-1		Foot	09-1027B-1
O					
Onan Corp	Ensign	10-35038-5		Flange	09-808B-1
	MAJB	10-35038-5		Flange	09-808B-1
	5.0 MDKOB	10-35211-5		Flange	09-808B-1
	5.5 MDKUB	10-35211-5		Flange	09-808B-1
	6.0 MDKOB	10-35211-5		Flange	09-808B-1
	6.5 MDKUB	10-35211-5		Flange	09-808B-1
	7.5 MDKOB	10-35211-5		Flange	09-808B-1
	9.0 MDKOB	10-35211-5		Flange	09-808B-1
P					
Panther Marine	350	10-24228-1		Flange	09-1027B-1
	454	10-24232-1		Flange	09-812B-1
Pathfinder Marine	4+5 cyl	10-24225-1		Flange	09-1027B-1
	4+5 cyl	10-24230-2		Flange	09-1027B-1
Peninsular Engines	8,2 litres	10-24349-01		Flange	09-1028B
Perkins	3HD46	–		Flange	09-1026B-1
	4.107MLL	10-24119-2		Flange	09-1027B-1
	4.108 4 cyl	10-24119-2		Flange	09-1027B-1
	4.108MLL	–		Flange	09-1027B-1
	4.236 4 cyl	10-24215-1	A)	Flange	09-1027B-1
	4.236/4.236T	–		Flange	09-1027B-1
	4.236LL	–		Flange	09-1027B-1
	4.99M	10-24119-2		Flange	09-1027B-1
	4.99M	10-24119-2		Flange	09-1027B-1
	6.3540M	10-24014-4		Flange	09-1028B
	6.305/6.354 6 cyl	10-24014-1		Flange	09-1028B
	6.3543M	10-24014-1		Flange	09-1028B
	6.354DM	–		Flange	09-1028B
	6HD 135/15D	–		Flange	09-1028B
	6HD 135/15D	10-24014-1		Flange	09-1028B
	M20 Perama	–		Flange	09-806B-1
	M200/240/275	–		Flange	09-1027B-1
	M25/M30/3HD20	–		Flange	09-1026B-1
	M35/40	–		Flange	09-1026B-1
	M50/60/80T Prima	–		Flange	09-1026B-1
	M90/4HD76/6HD	–		Flange	09-1027B-1
	MC42	–		Flange	09-1026B-1
	T/H/HT 6.354LL	10-24014-4		Flange	09-1028B
	T/H/HT 6.354M	–		Flange	09-1027B-1
	TV8.5410/40	–		Flange	09-819B-1
	V8.510	–		Flange	09-819B-1

! *Pump art no in brackets = replacement pump* A) *Pump discontinued* B) *Only available to manufacturer* * *with flange* ** *without flange*

Manufacturer	Engine Description	JP Pump art. no.	Note	Mounting	JP Impeller art. no.
PKF Marine	2722	10-24140-1		Flange	09-1027B-1
	2725	10-24140-1		Flange	09-1027B-1
	2726T	10-24140-1		Flange	09-1027B-1
	BSD 444T	10-24073-1		Foot	09-1027B-1
	FSD 425	10-24073-1		Foot	09-1027B-1
Pwer Genny	2 cyl	10-35038-4		Foot	09-808B-1
PowerGen Pty Ltd	Kubota OC60	10-24569-01		Foot	09-808B-1
R					
Rodahl Marin	2710	10-24139-1		Flange	09-1028B
	2715	10-24139-1		Flange	09-1028B
	2722	10-24139-1		Flange	09-1028B
	2725	10-24139-1		Flange	09-1028B
	2726	10-24139-1		Flange	09-1028B
	2728	10-24139-1		Flange	09-1028B
	2704ET	10-24139-1		Flange	09-1028B
Ruggerini	CRD 100	–		Flange	09-808B-1
	CRD 100/951	10-35118-1(10-35157-3)	!	Flange	09-808B
	CRD 951	10-35157-3		Flange	09-808B-1
	MM150	10-35157-6		Flange	09-808B-1
	MM191	10-35157-6		Flange	09-808B-1
	MM351	10-35241-1		Flange	09-810B-1
	PM 105	10-35118-1(10-35157-3)	!	Flange	09-808B
	PM 105/2	10-24119-2		Flange	09-1027B-1
	PM 105/2	10-35157-3		Flange	09-808B-1
	RD 100/2	10-35157-3		Flange	09-808B-1
	RD 100/951	10-35118-1(10-35157-3)	!	Flange	09-808B
	RDM 901	10-35157-3		Flange	09-808B-1
	RDM 901/2	10-24119-2		Flange	09-1027B-1
	RM 270	10-35098-2		Flange	09-1026B-1
	RM 80	10-35157-3		Flange	09-808B-1
	RM 90	10-35157-6		Flange	09-808B-1
S					
Sabb	2J	10-24119-8	A)	Flange	09-1027B-1
	F 210	10-22355-1	A)	Flange	09-1027B-1
	F 4.254	10-24140-1		Flange	09-1027B-1
	F 4.415	10-24140-1		Flange	09-1027B-1
	F 444	10-22355-2	A)	Flange	09-1027B-1
	F 6.363 T	10-24139-1		Flange	09-1028B
	F 6.363 TI	10-24139-1		Flange	09-1028B
	F 6.380	10-24140-1		Flange	09-1027B-1
	F 6.595T	10-24139-1		Flange	09-1028B
	F 6.595TI	10-24139-1		Flange	09-1028B
	F 6.595TIP	10-24139-1		Flange	09-1028B
	F 6.622	10-24140-1		Flange	09-1027B-1
	L 2.093	10-24119-8	A)	Flange	09-1027B-1
	L 3.139	10-24119-8	A)	Flange	09-1027B-1
	L 4.186	10-24119-8	A)	Flange	09-1027B-1
	M 4.130	10-35333-01+2 pcs 01-43238		Flange	09-810B

! *Pump art no in brackets = replacement pump* A) *Pump discontinued* B) *Only available to manufacturer* * *with flange* ** *without flange*

Manufacturer	Engine Description	JP Pump art. no.	Note	Mounting	JP Impeller art. no.
Sabb cont'd	M 4.140	10-35333-01+2 pcs 01-43238		Flange	09-810B
	M 4.210	10-24119-8	A)	Flange	09-1027B-1
	M 4.295	10-24119-8	A)	Flange	09-1027B-1
Sabre	Sabre 180/212	10-24139-1		Flange	09-1028B
	Sabre 80/120/140	–		Flange	09-1027B-1
Scania	D11M01	10-24006-2	A)	Flange	09-814B
	D14	10-24159-2	A)	Flange	09-814B
	D8	10-22096-1		Flange	09-819B
	D8	10-22096-3		Flange	09-819B
	D8	10-22096-2	A)	Flange	09-819B
	DN11	10-24308-02	B)	Flange	09-814B
	DN9	10-24308-02	B)	Flange	09-814B
	DS11	10-24308-02	B)	Flange	09-814B
	DS14	10-24308-03	B)	Flange	09-814B
	DS9	10-22096-1	B)	Flange	09-819B
	DSI11	10-24159-1	A)	Flange	09-814B
	DSI11	10-24308-02	B)	Flange	09-814B
	DSI11M01	10-24006-1	A)	Flange	09-814B
	DSI14	10-24308-03	B)	Flange	09-814B
Schlapkohl	DTP92/DTP106	10-22139-1	A)	Flange	09-1028B
	Lehman Power	10-24119-5		Flange	09-1027B-1
	SMP 6-cyl/DTP75	10-22139-1	A)	Flange	09-1028B
Schwarting	S 314	10-24070-1		Foot	09-1028B
	S 352/352A	10-24070-1		Foot	09-1028B
	S 421/422/422A/423	10-13021-3	A)	Foot	09-819B
	S 424	10-13021-1		Foot	09-819B
	S 424A	10-13026-2		Foot	09-802B
	S 424LA	10-13026-1		Foot	09-802B
	S 615/616	10-24119-4		Flange	09-1027B-1
	S 617/617A	10-24119-4		Flange	09-1027B-1
	S 636	10-24119-4		Flange	09-1027B-1
	S 636	10-24127-1		Flange	09-1028B
Sea Wasp	SW 3200-4 KVA-	10-35187-1		Flange	09-808B-1
	SW 4800- 6 KVA-	10-35211-3		Flange	09-808B-1
	SW 5200- 6.5 KVA-	10-24514-03		Flange	09-810B-1
	SW 6400- 8 KVA-	10-24514-03		Flange	09-810B-1
	SW 7200- 9 KVA-	10-24514-03		Flange	09-810B-1
	SW 8800-11 KVA-	10-24119-2		Flange	09-1027B-1
	SW 9600- 12 KVA-	10-24514-03		Flange	09-810B-1
	SW 10 000-12.5 KVA-	10- 24119-2		Flange	09-1027B-1
	SW 13600- 17 KVA-	10-24119-2		Flange	09-1027B-1
	SW 16000- 20 KVA-	10-24119-2		Flange	09-1027B-1
	SW 18400- 23 KVA-	10-24127-1		Flange	09-1028B
	EARLY SW 20000- 25 KVA-	10-24119-2		Flange	09-1027B-1
	LATE SW 20000- 25 KVA-	10-24127-1		Flange	09-1028B
	EARLY SW 24000- 30 KVA-	10-24119-2		Flange	09-1027B-1
	LATE SW 24000-30 KVA-	10-24127-1		Flange	09-1028B
	SW 36000- 45 KVA-	10-24127-1		Flange	09-1028B
	SW 42000- 52.5 KVA-	10-24127-1		Flange	09-1028B

! *Pump art no in brackets = replacement pump* A) *Pump discontinued* B) *Only available to manufacturer* * *with flange* ** *without flange*

Manufacturer	Engine Description	JP Pump art. no.	Note	Mounting	JP Impeller art. no.
Sole Diesel	SM615/616/636	–		Flange	09-1027B-1
	6 cyl SM120	–		Flange	09-1028B
Steyr	MO236-OMC	-		Flange	08-812B-1/09-1028B
	All 4 Cyl./ 6Cyl. from 1999	10-24637-01		Flange	09-1028B
T					
Telva Oy	2722 E	10-24140-1		Flange	09-1027B-1
	2725 E	10-24139-1		Flange	09-1028B
	2726 T	10-24139-1		Flange	09-1028B
	2728 TIM	10-24139-1		Flange	09-1028B
Tempest	1622 S	–		Flange	09-1026B-1
	0,208	10-24139-1		Flange	09-1028B
	6.150/180	10-24139-2	A)	Flange	09-1028B
	Captain 1.5/1.8	10-24073-1		Foot	09-1027B-1
	Commander 2.2D (DC)	–		Flange	09-1026B-1
	Commander 2.5LR (HX)	10-24119-2		Flange	09-1027B-1
	Commander 50HP (DC)	–		Flange	09-1026B-1
	Commander 50HP (DC)	–		Flange	09-1026B-1
	Commander 50HP (HX)	10-24119-2		Flange	09-1027B-1
	Commander 50HP (HX)	10-24119-6		Flange	09-1027B-1
	Commodore 34/38	–		Flange	09-1026B-1
	Commodore 53	10-24119-4		Flange	09-1027B-1
	Navigator 38	–		Flange	09-1026B-1
	Sea Lord 5.66	10-24014-		Flange	09-1028B
	Sea Prince 3000S	10-24119-2		Flange	09-1027B-1
	Vedette 25 MkIIVI	–		Flange	09-806B-1
	Vedette MkII-VI	–		Flange	09-1026B-1
	Yeoman 36	–		Flange	09-1026B-1
Thornycroft	Feb-90	10-24073-1		Foot	09-1027B-1
	90	–		Flange	09-801B
	108	–		Flange	09-1027B-1
	152	10-24119-1		Flange	09-1027B-1
	154	10-24119-1		Flange	09-1027B-1
	230	10-24014-1		Flange	09-1028B
	240	10-24140-1		Flange	09-1027B-1
	251	10-24140-1		Flange	09-1027B-1
	331	10-24140-1		Flange	09-1027B-1
	345	10-24014-1		Flange	09-1028B
	358	10-24329-11		Flange	09-1028B
	360	10-24329-1		Flange	09-1028B
	400	10-24014-1		Flange	09-1028B
	760	–		Flange	09-819B
	138/160	10-24119-1		Flange	09-1027B-1
	238,T 238	–		Flange	09-1028B
	360/I	10-24139-1		Flange	09-1028B
	590/690/691	–		Flange	09-819B
	90E,90/2	10-24073-1		Foot	09-1027B-1
	RF LD-220	–		Flange	09-801B
	T 358	–		Flange	09-1028B
	T 360/1	10-24139-1		Flange	09-1028B
	T 400	–		Flange	09-1028B

! *Pump art no in brackets = replacement pump* A) *Pump discontinued* B) *Only available to manufacturer* * *with flange* ** *without flange*

Manufacturer	Engine Description	JP Pump art. no.	Note	Mounting	JP Impeller art. no.
Thornycroft cont'd	T 500	–		Flange	09-819B
	TA 358	10-24329-11	A)	Flange	09-1028B
	XLD 418	10-24290-1		Flange	09-810B-1
	33 & 50	10-24319-01		Flange	09-810B-1
	60 & 80	10-35271-01		Flange	09-810B-1
Tingbrand	200 TMB	10-24228-1		Flange	09-1027B-1
	225 TMB	10-24228-1		Flange	09-1027B-1
	270 TMB	10-24228-1		Flange	09-1027B-1
	310 TMB	10-24228-1		Flange	09-1027B-1
Toyota	120Z	10-24515-01	B)	Flange	09-812B-1
	197F	10-13208-01	B)	Pulley	09-812B-1
U					
Union Motor	220D	10-35100-1		Flange	09-1027B-1
	XD2P	10-24119-3	A)	Flange	09-1027B-1
Universal (Medalist)	1.400000001	10-35038-5		Foot	09-808B-1
V					
Valmet Oy	311	10-24014-2	A)	Flange	09-1028B
	411	10-24014-4		Flange	09-1028B
	611	10-24181-1		Flange	09-819B
	612	10-24181-1		Flange	09-819B
	310 DM	–		Flange	09-1027B-1
	4035 PM	–		Flange	09-1026B-1
	411 CM/CSM	10-24014-1		Flange	09-1028B
	411 DM	–		Flange	09-1027B-1
	611 DM/DSM	10-24181-1		Flange	09-819B
	611 DSBJM	10-24181-1		Flange	09-819B
	611 DSBM	10-24181-1		Flange	09-819B
	615 DM	10-21915-2		Flange	09-819B
Variant	5PS/8PS/10PS	–		Flange	09-808B-1
Vasa Motor		10-35087-1	A)	Flange	09-1026B-1
		10-32603-1	A)	Flange	09-801B
		10-35067-1	A)	Flange	09-801B
Vetus den Ouden	36-22-11	10-35100-1		Flange	09-1027B
	42-26-21	10-35100-1		Flange	09-1027B
	42-26-26	10-35100-1		Flange	09-1027B
	52-34-21	10-35100-1		Flange	09-1027B
	52-34-26	10-35100-1		Flange	09-1027B
	C 4/6	–		Flange	09-1028B
	DT(A)43	–		Flange	09-1028B
	DT(A)44	10-24734-04		Flange	09-1028B
	DT(A)64	–		Flange	09-1028B
	DT(A)66	10-24734-05		Flange	09-1028B
	DT(A)67	10-24734-05		Flange	09-1028B
	K 3/3D/4	10-35161-1		Flange	09-810B
	L 2/3	–		Flange	09-810B

! *Pump art no in brackets = replacement pump* A) *Pump discontinued* B) *Only available to manufacturer* ** with flange* *** without flange*

Manufacturer	Engine Description	JP Pump art. no.	Note	Mounting	JP Impeller art. no.
Vetus den Ouden cont'd	M 2.04	–		Flange	09-810B
	M 2.05	10-24630-02		Flange	09-810B
	M 2.06	10-24630-02		Flange	09-810B
	M 2.C5	–		Flange	09-810B
	M 2.D5	10-24630-02		Flange	09-810B
	M 3.09	10-24630-02		Flange	09-810B
	M 3.10	10-35240-1		Flange	09-810B
	M 3.28	10-24630-02		Flange	09-810B
	M 4.14	10-35100-1		Flange	09-1027B
	M 4.15	10-24630-01		Flange	09-810B
	M 4.17	10-24630-01		Flange	09-810B
	P 4.17	–		Flange	09-1027B
	P 4.19	–		Flange	09-1027B
	P 4.25	10-24218-1		Flange	09-1028B
	VH 4.65	–		Flange	09-1027B
	VH 4.80	–		Flange	09-1027B
VM Motori	102 MH11	10-35058-1	A)	Flange	09-1026B-1
	102 MH11/SV	10-35058-1	A)	Flange	09-1026B-1
	103 MH11	10-24119-2		Flange	09-1027B-1
	103 MH11/SV	10-24119-2		Flange	09-1027B-1
	104 MH11	10-24119-2		Flange	09-1027B-1
	104 MH11/SV	10-24119-2		Flange	09-1027B-1
	106 MH11	10-24119-2		Flange	09-1027B-1
	106 MH11/SV	10-24119-2		Flange	09-1027B-1
	114/116 MH	10-24014-1		Flange	09-1028B
	116 DAN M	10-24119-2		Flange	09-1027B-1
	1306 MH14	10-24091-1	A)	Flange	09-819B
	1308 MH14	10-24091-1	A)	Flange	09-819B
	1310 MH14	10-24090-1		Flange	09-1026B-1
	1312 MH14	10-24090-1		Flange	09-1026B-1
	804/806 M	10-24119-2		Flange	09-1027B-1
	956 M11	10-24090-1		Flange	09-1026B-1
	HR 480 HT	10-24127-1		Flange	09-1028B
	HR 488 HT9	10-24127-1		Flange	09-1028B
	HR 492 H9	10-24127-1		Flange	09-1028B
	HR 492 HT9	10-24127-1		Flange	09-1028B
	HR 592 H9	10-24127-1		Flange	09-1028B
	HR 592 HT9	10-24127-1		Flange	09-1028B
	HR 688 HT9	10-24127-1		Flange	09-1028B
	HR 692 H9	10-24127-1		Flange	09-1028B
	HR 692 HT9	10-24127-1		Flange	09-1028B
	T 1306 MH14	10-24091-1	A)	Flange	09-819B
	T 1308 MH14	10-24091-1	A)	Flange	09-819B
	T 1310 MH14	10-24090-1		Flange	09-1026B-1
	T 1312 MH14	10-24090-1		Flange	09-1026B-1
	TI 1306 MH14	10-24091-1	A)	Flange	09-819B
	TI 1308 MH14	10-24091-1	A)	Flange	09-819B
	TI 1310 MH14	10-24090-1		Flange	09-1026B-1
	TI 1312 MH14	10-24090-1		Flange	09-1026B-1
WM Diesel (KUBOTA)	WM 12 (Z482)	10-35211-3		Flange	09-808B-1
	WM 18 (D722)	10-24341-01		Flange	09-810B-1
	WM 22 (D905)	10-24334-01		Flange	09-1027B-1
	WM 28 (D1105)	10-24334-01		Flange	09-1027B-1

! *Pump art no in brackets = replacement pump* A) *Pump discontinued* B) *Only available to manufacturer* * *with flange* ** *without flange*

Manufacturer	Engine Description	JP Pump art. no.	Note	Mounting	JP Impeller art. no.
WM Diesel (KUBOTA) cont'd	WM 35 (V1505)	10-24334-01		Flange	09-1027B-1
	WM 50 (V2203)	10-24334-01		Flange	09-1027B-1
	WM 68 (V3300)	10-24127-1		Flange	09-1028B
	WM 85T (V3300T)	10-24127-1		Flange	09-1028B

Note! All pumps for Volvo Penta engines only available through Volvo Penta.

Volvo Penta	1113 BR	–		Flange	09-1028B
	2001 B	10-24178-1	B)	Flange	09-808B-1
	2001/2/3 R	10-24178-1	B)	Flange	09-808B-1
	2002 B	10-24178-1	B)	Flange	09-808B-1
	2003 B	10-24178-1	B)	Flange	09-808B-1
	2003 T	10-24268-1	B)	Flange	09-1027B-1
	2003 TB	10-24268-1	B)	Flange	09-1027B-1
	4.3GL-G, 4.3GL-GF	10-13356-01		Crank shaft	09-812B-1
	4.3GXi-A	10-13353-01		Crank shaft	09-1027B-10
	4.3GXi-B, 4.3GXi-BF, 4.3OSi-B, 4.3OSi-BF	10-13353-01		Crank shaft	09-1027B-10
	4.3GXi-C/CF/D/DF, 4.3OSi-C/CF/D/DF	10-13353-01		Crank shaft	09-1027B-10
	4.3GXi-E, 4.3GXi-EF, 4.3OSi-E, 4.3OSi-EF	10-13353-01		Crank shaft	09-1027B-10
	4.3GXi-F, 4.3GXi-FF, 4.3OSi-F, 4.3OSi-FF	10-13356-01		Crank shaft	09-812B-1
	4.3GXi-G, 4.3GXi-GF, 4.3OSi-G, 4.3OSi-GF	10-13356-01		Crank shaft	09-812B-1
	431 A	10-24372-01	B)	Flange	09-1027B-1
	5.0GL-H, 5.0GL-HF	10-13356-01		Crank shaft	09-812B-1
	5.0GXi, 5.0OSi, 5.7Gi, 5.7OSi, 5.7GXi, 5.7OSXi	10-13353-01		Crank shaft	09-1027B-10
	5.0GXi-A, 5.7Gi-A, 5.7GXi-A/B, 5.7GiI-A, 5.7GXiI-A	10-13353-01		Crank shaft	09-1027B-10
	5.0GXi-C/-CF/-D/-DF, 5.0OSi-C/-CF/-D/-DF	10-13353-01		Crank shaft	09-1027B-10
	5.0GXi-E, 5.0GXi-EF, 5.0OSi-E, 5.0GXi-EF	10-13353-01		Crank shaft	09-1027B-10
	5.0GXi-F, 5.0GXi-FF, 5.0OSi-F, 5.0OSi-FF	10-13356-01		Crank shaft	09-812B-1
	5.0GXi-G, 5.0GXi-GF, 5.0OSi-G, 5.0OSI-GF	10-13356-01		Crank shaft	09-812B-1
	5.7Gi, 5.7GXi, 5.7OSi, 5.7OSXi, 5.7GiI, 5.7GXiI	10-13353-01		Crank shaft	09-1027B-10
	5.7Gi, 5.7GXi, 5.7OSi, 5.7OSXi, 5.7GiI, 5.7GXiI	10-13353-01		Crank shaft	09-1027B-10
	5.7Gi-F/FF, 5.7GXi-G/GF, 5.7OSi-E/EF, 5.7OSXi-E/EF	10-13356-01		Crank shaft	09-812B-1
	5.7Gi-G, 5.7Gi-GF, 5.7GXi-H, 5.7GXi-HF, 5.7OSi-G, 5.7OSi-GF, 5.7OSXi-G, 5.7OSXi-GF	10-13356-01		Crank shaft	09-812B-1
	5.7GiI-F, 5.7GXiI-G	10-13356-01		Crank shaft	09-812B-1
	5.7GiI-G, 5.7GXiI-H	10-13356-01		Crank shaft	09-812B-1
	500 A/B	10-24372-01	B)	Flange	09-1027B-1
	501 A	10-24372-01	B)	Flange	09-1027B-1
	570 A	10-24372-01	B)	Flange	09-1027B-1
	571 A	10-24372-01	B)	Flange	09-1027B-1
	8.1Gi-A/B/C/D, 8.1GSi, 8.1GXi-A/B/C	10-13353-03		Crank shaft	08-1027B-10
	8.1Gi-E/EF, 8.1GXi-D/DF, 8.1OSi-A/AF, +IBs	10-13353-03		Crank shaft	08-1027B-10
	8.1Gi-F/FF, 8.1GXi-E/EF, 8.1OSi-B/BF, +IBs	10-13353-03		Crank shaft	08-1027B-10
	8.1Gi-G/GF, 8.1GXI-F/FF, 8.1OSi-C/CF	10-13356-03		Crank shaft	08-812B-1
	8.1Gi-H, 8.1Gi-HF, 8.1GXi-G, 8.1GXi-GF, 8.1OSi-D, 8.1OSi-DF	10-13356-03		Crank shaft	08-812B-1
	8.1GiI-G, 8.1GXiI-F	10-13356-03		Crank shaft	08-812B-1
	8.1GiI-H, 8.1GXiI-G	10-13356-03		Crank shaft	08-812B-1
	AD 31A/B	10-24277-1	B)	Flange	09-1028B
	AD 41A/B	10-24277-1	B)	Flange	09-1028B
	AQ 110/115	10-35098-1	B)	Flange	09-1026B-1
	AQ 115A/B	10-35098-1	B)	Flange	09-1026B-1
	AQ 120	10-35098-1	B)	Flange	09-1026B-1
	AQ 120B	10-35098-1	B)	Flange	09-801B
	AQ 125A/B	10-35098-1	B)	Flange	09-801B
	AQ 130	10-35098-1	B)	Flange	09-1026B-1

! *Pump art no in brackets = replacement pump* A) *Pump discontinued* B) *Only available to manufacturer* ** with flange* *** without flange*

Manufacturer	Engine Description	JP Pump art. no.	Note	Mounting	JP Impeller art. no.
Volvo Penta cont'd	AQ 130A/B	10-35098-1	B)	Flange	09-1026B-1
	AQ 130C/D	10-35098-1	B)	Flange	09-1026B-1
	AQ 131A/B/C/D	10-32621-3	B)	Flange	09-801B
	AQ 140	10-35098-1	B)	Flange	09-1026B-1
	AQ 140A	10-32621-3	B)	Flange	09-801B
	AQ 145	10-32621-3	B)	Flange	09-801B
	AQ 145A/B	10-32621-3	B)	Flange	09-801B
	AQ 151A/B/C	10-32621-3	B)	Flange	09-801B
	AQ 165A	10-32621-3	B)	Flange	09-801B
	AQ 170B/C	10-32621-3	B)	Flange	09-801B
	AQ 170C	10-32058-1	B)	Flange	09-801B
	AQ 171A/C	10-32058-1	B)	Flange	09-801B
	AQ 175A	10-32058-1	B)	Flange	09-801B
	AQ 180	10-24372-01	B)	Flange	09-1027B-1
	AQ 200	10-24372-01	B)	Flange	09-1027B-1
	AQ 200B/C/D/F	10-24372-01	B)	Flange	09-1027B-1
	AQ 205A	10-24372-01	B)	Flange	09-1027B-1
	AQ 211A	10-24372-01	B)	Flange	09-1027B-1
	AQ 21A	10-11246-1	A) B)	Flange	09-1027B-1
	AQ 225	10-24372-01	B)	Flange	09-1027B-1
	AQ 231A/B	10-24372-01	B)	Flange	09-1027B-1
	AQ 250A	10-32621-3	B)	Flange	09-801B
	AQ 251A	10-32621-3	B)	Flange	09-801B
	AQ 255B	10-24372-01	B)	Flange	09-1027B-1
	AQ 260	10-24372-01	B)	Flange	09-1027B-1
	AQ 260A	10-24372-01	B)	Flange	09-1027B-1
	AQ 271A/B/C/D	10-24372-01	B)	Flange	09-1027B-1
	AQ 280A	10-24372-01	B)	Flange	09-1027B-1
	AQ 290	10-24372-01	B)	Flange	09-1027B-1
	AQ 290A	10-24372-01	B)	Flange	09-1027B-1
	AQ 2B	–	B)	Flange	09-806B-1
	AQ 311A	–	B)	Flange	09-1027B-1
	AQ 40DP	10-22335-2	A) B)	Flange	09-1028B
	AQ 60 F	10-35098-1	B)	Flange	09-1026B-1
	AQ 70D	10-24017-1	B)	Flange	09-1028B
	AQ 90	–		Flange	09-1026B-1
	AQ 95	10-35098-1	B)	Flange	09-1026B-1
	AQ 95A	10-35098-1	B)	Flange	09-1026B-1
	AQAD 30A	10-24277-1	B)	Flange	09-1028B
	AQAD 31A	10-24277-1	B)	Flange	09-1028B
	AQAD 40A/B	10-24277-1	B)	Flange	09-819B
	AQAD 41A	10-24277-1	B)	Flange	09-1028B
	AQD 19	10-11236-2	A)	Flange	09-1028B
	AQD 21	10-32098-1	B)	Flange	09-801B
	AQD 21A	10-32058-1	B)	Flange	09-801B
	AQD 21B	10-32058-1	B)	Flange	09-801B
	AQD 27	10-11236-2	A) B)	Flange	09-1028B
	AQD 29	10-11236-2	A) B)	Flange	09-1028B
	AQD 30/DP	10-22335-2	A) B)	Flange	09-1028B
	AQD 32A	10-11236-2	A) B)	Flange	09-1028B
	AQD 40A	10-24277-1	B)	Flange	09-1028B
	AQD 41A	10-24277-1	B)	Flange	09-1028B
	AQD 70B	–		Flange	09-1028B
	AQD 70C	10-24017-1	B)	Flange	09-1028B
	AQD 70D	10-24020-1	A) B)	Flange	09-1028B

! *Pump art no in brackets = replacement pump* A) *Pump discontinued* B) *Only available to manufacturer* * *with flange* ** *without flange*

Manufacturer	Engine Description	JP Pump art. no.	Note	Mounting	JP Impeller art. no.
Volvo Penta cont'd	BB 100	10-35098-1		Flange	09-1026B-1
	BB 115	10-35098-1	B)	Flange	09-1026B-1
	BB 115B/C	10-35098-1	B)	Flange	09-1026B-1
	BB 140A	10-32058-1	B)	Flange	09-801B
	BB 145A	10-32058-1	B)	Flange	09-801B
	BB 165A	10-32058-1	B)	Flange	09-801B
	BB 170A/B	10-32058-1	B)	Flange	09-801B
	BB 170C	10-32058-1	B)	Flange	09-801B
	BB 21	10-32621-2	B)	Flange	09-801B
	BB 30	10-35098-1	B)	Flange	09-1026B-1
	D 41A/B	10-24277-1	B)	Flange	09-1028B
	D1-13 A/B	10-24751-01		Flange	09-1026B-1
	D1-20 A/B	10-24751-01		Flange	09-1026B-1
	D1-30 A/B	10-24752-01		Flange	09-1026B-1
	D2-40 A/B	10-24752-01		Flange	09-1026B-1
	D2-55 A/B/C/D/E	10-24752-01		Flange	09-1026B-1
	D2-75 A/B/C	10-24752-01		Flange	09-1026B-1
	D3	10-14449-01		Crank shaft	09-812B-1
	D4	-		Crank shaft	09-1028B
	EF 3.0 Liter Engines	10-13353-01		Crank shaft	09-1027B-10
	EF 4.3 Liter Engines	10-13353-01		Crank shaft	09-1027B-10
	EF 5.0, 5.7 Liter Engines	10-13353-01		Crank shaft	09-1027B-10
	IPS350	-		Crank shaft	09-1028B
	IPS400	-		Crank shaft	09-1028B
	KAD 42A	10-24394-01		Flange	09-1028B
	KAD 42P/DP/DPK	10-24394-01	B)	Flange	09-1028B
	KAMD 42A	10-24394-01		Flange	09-1028B
	KAMD 42P	10-24394-01	B)	Flange	09-1028B
	MB 10A	10-35015-1	B)	Flange	09-808B-1
	MB 10A/11	10-35157-5	B)	Flange	09-808B-1
	MB 16A	10-35098-1	B)	Flange	09-1026B-1
	MB 18/MB 18F	10-35098-1	B)	Flange	09-1026B-1
	MB 20	10-35098-1	B)	Flange	09-1026B-1
	MB 20A/B/C	10-35098-1	B)	Flange	09-1026B-1
	MBN 40	10-42864-1	A) B)	Flange	09-801B
	MD 1	10-35157-5	B)	Flange	09-808B-1
	MD 100/100BK	10-21915-1	B)	Flange	09-819B
	MD 100A	10-21915-1	B)	Flange	09-819B
	MD 100B	10-24017-1	B)	Flange	09-1028B
	MD 11C/D	10-35157-5	B)	Flange	09-808B-1
	MD 120	10-21915-1	B)	Flange	09-819B
	MD 120A	10-21915-1	B)	Flange	09-819B
	MD 17C	10-35098-1	B)	Flange	09-1026B-1
	MD 17D	10-35098-1	B)	Flange	09-1026B-1
	MD 19	10-11236-1	A) B)	Flange	09-1028B
	MD 1A/1B	10-35157-5	B)	Flange	09-808B-1
	MD 1B	10-35157-5	B)	Flange	09-808B-1
	MD 1KHD/HY	10-35157-5	B)	Flange	09-808B-1
	MD 2	10-35157-5	B)	Flange	09-808B-1
	MD 2010	10-24463-01	B)	Flange	09-806B-1
	MD 2020	10-24463-01	B)	Flange	09-806B-1
	MD 2030	10-24465-01	B)	Flange	09-1026B-1
	MD 2040	10-24465-01	B)	Flange	09-1026B-1
	MD 20B	10-35098-1	B)	Flange	09-1026B-1
	MD 21A	10-11246-1	A) B)	Flange	09-1027B-1

! *Pump art no in brackets = replacement pump* A) *Pump discontinued* B) *Only available to manufacturer* * *with flange* ** *without flange*

Manufacturer	Engine Description	JP Pump art. no.	Note	Mounting	JP Impeller art. no.
Volvo Penta cont'd	MD 21A	10-32058-1	B)	Flange	09-801B
	MD 21B	10-32058-1	B)	Flange	09-801B
	MD 22	–		Flange	09-1027B-1
	MD 27	10-11236-1	A) B)	Flange	09-1028B
	MD 29	10-11236-1	A) B)	Flange	09-1028B
	MD 2B	10-35157-5	B)	Flange	09-808B-1
	MD 2HBY	10-35157-5	B)	Flange	09-808B-1
	MD 30	10-22335-2	A) B)	Flange	09-1028B
	MD 30A	10-22335-2	A) B)	Flange	09-1028B
	MD 31	10-24277-1	B)	Flange	09-1028B
	MD 31A	10-24277-1	B)	Flange	09-1028B
	MD 32A	10-11236-1	A) B)	Flange	09-1028B
	MD 3B	10-35098-1	B)	Flange	09-1026B
	MD 40A	10-24277-1	B)	Flange	09-1028B
	MD 42	10-22144-1	A) B)	Flange	09-1028B
	MD 42A	10-32058-1	B)	Flange	09-801B
	MD 47A/C	–		Flange	09-1028B
	MD 47B	–		Flange	09-1028B
	MD 50A	–		Flange	09-1028B
	MD 5A	10-35157-5	B)	Flange	09-808B-1
	MD 5B/C	10-35157-5	B)	Flange	09-808B-1
	MD 67C	–		Flange	09-1028B
	MD 6A	10-35157-5		Flange	09-808B-1
	MD 6B	10-35157-5		Flange	09-808B-1
	MD 70A	–		Flange	09-1028B
	MD 70B/C	10-24017-1	B)	Flange	09-1028B
	MD 71	10-24315-01	A) B)	Flange	09-819B
	MD 7A	10-35157-5	B)	Flange	09-808B-1
	MD 7B	10-35157-5	B)	Flange	09-808B-1
	MD 96B	–		Flange	09-1028B
	MDN 19	10-42864-1	A) B)	Flange	09-801B
	TAMD 102A	–		Flange	09-814B
	TAMD 120	10-21915-1	B)	Flange	09-819B
	TAMD 120A	10-21915-1	B)	Flange	09-819B
	TAMD 120B	–		Flange	09-814B
	TAMD 121C	–		Flange	09-814B
	TAMD 121D	–		Flange	09-814B
	TAMD 122A/C/D	–		Flange	09-814B
	TAMD 162A/B	10-13166-01	B)	Flange	09-814B
	TAMD 163A/P	10-13166-01	B)	Flange	09-814B
	TAMD 30	10-22335-2	A) B)	Flange	09-1028B
	TAMD 30A	10-22335-2	A) B)	Flange	09-1028B
	TAMD 31	10-24277-1	B)	Flange	09-1028B
	TAMD 31A/B	10-24277-1	B)	Flange	09-1028B
	TAMD 40A/B	10-24130-02	B)	Flange	09-819B
	TAMD 41	10-24277-1	B)	Flange	09-1028B
	TAMD 41A/B	10-24277-1	B)	Flange	09-1028B
	TAMD 60	–		Flange	09-1028B
	TAMD 60/60A	10-22335-2	A) B)	Flange	09-1028B
	TAMD 60B/C	10-22335-2	A) B)	Flange	09-1028B
	TAMD 61	10-24315-01	A) B)	Flange	09-819B
	TAMD 61/A	10-24315-01	A) B)	Flange	09-819B
	TAMD 70	10-24017-1	B)	Flange	09-1028B
	TAMD 70B	10-24017-1	B)	Flange	09-1028B
	TAMD 70C	10-24017-1	B)	Flange	09-1028B

! *Pump art no in brackets = replacement pump* A) *Pump discontinued* B) *Only available to manufacturer* * *with flange* ** *without flange*

Manufacturer	Engine Description	JP Pump art. no.	Note	Mounting	JP Impeller art. no.
Volvo Penta cont'd	TAMD 70D	10-24017-1	B)	Flange	09-1028B
	TAMD 70E	10-24017-1	B)	Flange	09-1028B
	TAMD 71/A/B	10-24315-01	A) B)	Flange	09-819B
	TAMD63 P-A, L-A	10-13306-01		Crank shaft	08-821BT
	THAMD 70	10-22335-2	B)	Flange	09-1028B
	THAMD 70B/C	10-22335-2	B)	Flange	09-1028B
	TIMD 96B	10-22335-2	B)	Flange	09-1028B
	TMD 100/100AK	10-21915-1	B)	Flange	09-819B
	TMD 100A	10-24017-1	B)	Flange	09-1028B
	TMD 100A	10-21915-1	B)	Flange	09-819B
	TMD 100C	10-24315-01	A) B)	Flange	09-819B
	TMD 102A	–		Flange	09-819B
	TMD 120	10-21915-1	B)	Flange	09-819B
	TMD 120A	10-21915-1	B)	Flange	09-819B
	TMD 121C	–		Flange	09-819B
	TMD 122A	–		Flange	09-819B
	TMD 30A	–		Flange	09-1028B
	TMD 31	10-24277-1	B)	Flange	09-1028B
	TMD 31A/B	10-24277-1	B)	Flange	09-1028B
	TMD 40A/B/C	10-24277-1	B)	Flange	09-1028B
	TMD 41A/B	10-24277-1	B)	Flange	09-1028B
	TMD 60B	10-22335-1	A) B)	Flange	09-1028B
	TMD 70B/C	10-24017-1	B)	Flange	09-1028B
	TMD 71	10-24315-01	A) B)	Flange	09-819B
Vythoulcas	D 4Q 50	–		Flange	09-1028B
	K2B/C	10-35167-1		Flange	09-810B-1
	K3D	10-35167-1		Flange	09-810B-1
	K3E/H/M	10-24119-2		Flange	09-1027B-1
	KE 75	10-35167-1		Flange	09-810B-1
	S 4	–		Flange	09-1028B
W					
Watermota	Sea Cub Mk2	10-35038-2		Foot	09-808B-1
	Alpha Canal Star 18	10-35241-2		Flange	09-810B-1
	Alpha Sailboat 20	10-35241-2		Flange	09-810B-1
	Alpha Workboat 20	10-35241-2		Flange	09-810B-1
	Alpha Sailboat 30	10-35241-2		Flange	09-810B-1
	Alpha Workboat 30	10-35241-2		Flange	09-810B-1
	Sea Panther 30	10-24214-4		Flange	09-810B-1
	Alpha Sailboat 40	10-35241-2		Flange	09-810B-1
	Alpha Workboat 40	10-35241-2		Flange	09-810B-1
	Sea Wolf 40	10-35098-4		Flange	09-1026B-1
	Sea Tiger 50	10-35098-4		Flange	09-1026B-1
	Alpha Sailboat 55	10-35241-2		Flange	09-810B-1
	Sea Panther 60	10-24214-4		Flange	09-810B-1
	Sea Horse 70	10-24214-4		Flange	09-810B-1
	Sea Panther 75	10-24214-4		Flange	09-810B-1
	Sea Ranger 90	10-24451-01		Flange	09-1027B-1
	Sea Horse 100	10-24230-3		Flange	09-1027B-1
	Sea Ranger 125	10-24445-01		Flange	09-1028B
	Sea Horse 130	10-24230-3		Flange	09-1027B-1
	Sea Lion 140	10-24139-4		Flange	09-1028B
	Super Lion 170	10-24139-4		Flange	09-1028B
	Super Lion 240	10-24139-4		Flange	09-1028B

! *Pump art no in brackets = replacement pump* A) *Pump discontinued* B) *Only available to manufacturer* * *with flange* ** *without flange*

Manufacturer	Engine Description	JP Pump art. no.	Note	Mounting	JP Impeller art. no.
Westerbeke	10 kW and up	10-35216-1	B)	Flange	09-810B-1
	8-10 kW	10-35038-7	B)	Flange	09-808B-1
Y					
Yamaha	6TA	10-24562-01	B)	Flange	09-812B-1
	6TC	10-24563-01	B)	Flange	09-812B-1
	ME 370 STi	10-24412-02	B)	Flange	09-812B-1
	ME 420 STi	10-24432-02	B)	Flange	09-812B-1
	N57	10-24633-01	B)	Flange	09-812B-1
	N60	10-13376-01	B)	Flange	09-812B-1
Yanmar	2 GM 20F	–		Flange	09-1026B-1
	2 GM/GM 20	–		Flange	09-806B-1
	2 QM 15/20	–		Flange	09-1026B-1
	3 GM	–		Flange	09-806B-1
	3 GM 30F	–		Flange	09-1026B-1
	3 HM/HM 35/HM 35F	–		Flange	09-1026B-1
	3 JH 2/JH TBE	–		Flange	09-1027B-1
	3 QM 30	–		Flange	09-1026B-1
	4 JH UTE	–		Flange	09-1027B-1
	4 JH/JH TE/JH HTE/JH DTE	–		Flange	09-1027B-1
	4 JIH2E/JIH2 TE	–		Flange	09-1027B-1
	4 JM TE	–		Flange	09-1027B-1
	4 LH TE/LH HTE/LH DTE	–		Flange	09-1028B
	SB 8/12	–		Flange	09-806B-1
	YSB 8/12	–		Flange	09-806B-1
	YSE 8/12	–		Flange	09-806B-1
	YSM 8/12	–		Flange	09-806B-1
Yanmar from modell year 97	2GM…	10-24509-02	B)	Foot	09-810B-1
	2GMF…	10-24509-01	B)	Foot	09-810B-1
	2YM, 3YM	10-13337-01	B)	Foot	09-810B-1
	3GM…	10-24509-02	B)	Foot	09-810B-1
	3GMF…	10-24509-01	B)	Foot	09-810B-1
	3JH…	10-24508-04	B)	Flange	09-1027B-1
	3JH4, 4JH4	10-13328-03	B)	Flange	09-1027B-1
	4BY, 6BY	10-13374-01	B)	Flange	09-1028B
	4JH…	10-24508-04	B)	Flange	09-1027B-1
	4LH…	10-24535-01	B)	Flange	09-1028B
	6LP…	10-24493-01	B)	Flange	09-812B-1
	6 LY2	10-13170-01	B)	Flange	09-821B
	6 LY3	10-13286-01	B)	Flange	09-821B
	6 SY-STP, 8SY-STP	10-24308-02	B)	Flange	09-814B
York Power	4 cyl	10-24228-1		Flange	09-1027B-1
Zenith/Isuzu	3LB1 and 3LD1 with PTO	10-24749-01		Flange	09-810B-1
	2CA1	10-24570-01		Foot	09-810B-1
	3CA1/3CB1/3CD1 without PTO	10-24749-01		Flange	09-810B-1
	3CB1 with PTO	10-24749-01 (modified)		Flange	09-810B-1
	3CD1/3CD1T with PTO	10-24749-01		Flange	09-810B-1
	4JG2 Gen-set	10-24571-01		Foot	09-1027B-1
	4BG1/6BG1 Gen-set	10-24572-01		Foot	09-1027B-1

! *Pump art no in brackets = replacement pump* A) *Pump discontinued* B) *Only available to manufacturer* * *with flange* ** *without flange*

Parts cross reference list

Jabsco
X
Johnson
Pump

Jabsco is the registered brandname of ITT Jabsco, a part of ITT Fluid Technology Corporation and a member of ITT Industries

Jabsco is the registered brandname of ITT Jabsco, a part of ITT Fluid Technology Corporation and a member of ITT Industries

Parts cross reference list

Jabsco *X* Johnson Pump

Cam 554
Endcover 554
Gasket 554
Impeller 554
Key 555
Lip seal 555
Mechanical seal 555
Pump 555
Pump body 559
Retaining ring 559
Screw 559
Shaft 559
Slinger 559
Washer 559
Wearplate 559

Jabsco is the registered brandname of ITT Jabsco, a part of ITT Fluid Technology Corporation and a member of ITT Industries

Description	Version	Jabsco art. no.	JP art. no.
Ball bearing		SP2600-06	05-08-126
Cam			
		490	01-42397
		834	01-42680
		934	01-42679
		2431	01-42584
		2441	01-45084
		2551	01-42755
		3255	01-42442
		6988	01-43137
		10338	01-45014
		10818	01-42389
		22039	01-43135
		22268	01-43138
		29303	01-42910
		2907-0001	01-45288
		29303-01	01-42415
		AL8	01-42910
		AL8-01	01-42415
Endcover		3992	01-42398
		3993	01-42441
		5522	01-42414
		9336	01-42422-1
		9406	01-42388-2
		9905	01-42388-1
		11515	01-35043
		11635	01-32605
		11689	01-35048
		29305	01-43239
		29475	01-45282
		AL6-200	01-42414
Gasket		816	01-42424
		890	01-42445
		1126	01-42911
		2553	01-42424
		3298	01-42401
		4788	01-42417
		4908	01-42636
		10817	01-42391
		29308	01-43240
Impeller		1210-0001	09-1027B
		1210-0003	09-1027B-9
	USA	13554-001	09-812B
	USA	17935-0001	09-1029B
	USA	17935-0001	09-819B
	USA	17935-0003	09-1029B-9
	USA	17935-0003	09-819B-9

Description	Version	Jabsco art. no.	JP art. no.
Impeller, cont'd	USA	17936-0001	09-814B
		17937-0001	09-1028B
		17937-0003	09-1028B-9
		18653-0001	09-810B
	EUR	21676-0001	09-814B
		22405-0001	09-808B
		4528-0001	09-806B
		4568-0001	09-801B
		6303-0003	09-824P
		673-0001	09-1026B
		673-0003	09-1026B-9
		6760-0001	09-802B
	EUR	836-0001	09-1029B
	EUR	836-0001	09-819B
	EUR	836-0003	09-1029B-9
	EUR	836-0003	09-819B-9
Key		X4000-567A	05-03-125
Lip seal		SP2700-48	05-29-142
		SP2701-04	05-29-120
		SP2701-11	05-29-117
Mechanical seal		22617-0010	09-20-115
Pump		9700	10-24014-
		9900	10-35098-4
		10670	10-22162-1
		10970	10-24215-1
		21770	10-42864-1
		10490-207	10-22346-1
		10550-200	10-22044-1
		10550-237	10-22044-1
		10630-0041	10-13024-3
		10630-07	10-13024-1
		10630-07	10-22047-1
		10630-57	10-13024-5
		10670-01	10-22162-2
		10670-10	10-22162-3
		10670-11	10-22162-4
		10670-200	10-13022-1
		10670-200	10-13022-5
		10670-201	10-13022-2
		10670-201	10-13022-6
		10670-210	10-13022-3
		10670-210	10-13022-7
		10670-211	10-13022-4
		10670-211	10-13022-8
		10680-200	10-22362-1
		10680-201	10-22362-2
		10680-210	10-22362-3

Description	Version	Jabsco art. no.	JP art. no.
Pump, cont'd		10680-211	10-22362-4
		10770-0051	10-24315-01
		10770-0151	10-24026-1
		10770-0251	10-24027-1
		10770-57	10-21915-1
		10800-21	10-11236-2
		10800-21	10-22139-1
		10880-0101	10-24091-1
		10880-0151	10-24091-2
		10880-0151	10-24091-3
		10950-200	10-22143-1
		10950-201	10-22143-1
		10950-201	10-24140-1
		10950-204	10-22143-2
		10950-204	10-24228-1
		10950-214	10-24140-2
		10950-2401	10-24140-1
		10950-2451	10-24140-2
		10950-2601	10-24140-3
		10980-0051	10-22096-1
		10980-0051	10-22096-3
		10980-01	10-22096-2
		11000-01	10-24090-1
		11100-0101	10-24096-4
		11100-0141	10-24096-2
		11100-0151	10-24096-3
	US	11810-0121	10-24188-4
	US	11810-0241	10-24188-5
	US	11810-0321	10-24188-6
	US	11860-0005	10-24071-17
	US	11860-0005	10-24071-98+05-32-1
	US	11860-0006	10-24071-18
	US	11860-0006	10-24071-98+05-32-2
	US	11860-0007	10-24071-33
	US	11860-0007	10-24071-98+05-32-5
	US	11870-0005	10-13022-33
	US	11870-0005	10-13022-95+05-32-1
	US	11870-0006	10-13022-34
	US	11870-0006	10-13022-95+05-32-2
	US	11870-0007	10-13022-65
	US	11870-0007	10-13022-95+05-32-5
		14940-	10-24180-
	US	1673-1001	10-24073-5
	US	1673-1003	10-24073-7
	US	1673-1051	10-24073-6
	US	17250-0003	10-32579-3
	US	18330-0000	10-13027-25
	US	18330-0000	10-13027-98+05-32-1
	US	18330-0001	10-13027-26
	US	18330-0001	10-13027-98+05-32-2
	US	18330-0002	10-13027-49

Description	Version	Jabsco art. no.	JP art. no.
Pump, cont'd	US	18330-0002	10-13027-98+05-32-5
	US	18370-0000	10-13026-7
	US	18590-0000	10-24453-01
	US	18590-0001	10-24453-02
		21140-2401	10-24139-1
		21140-2441	10-24139-2
		21140-2601	10-24139-3
		21140-2641	10-24139-4
		21690-200	10-22355-1
		21690-205	10-22355-2
		21700-	10-24188-
		21820-2001	10-24073-1
		21820-2051	10-24073-2
	US	21960-200	10-24071-1
		21960-200	10-24116-1
		21960-210	10-24071-3
		21960-210	10-24116-3
		21960-211	10-24071-4
		21960-211	10-24116-4
		21960-221	10-24071-2
		21960-221	10-24116-2
		22040-0501	10-24239-2
		22320-200	10-32588-1
	US	22740-0000	10-24232-1
		22940-2001	10-35038-1
		22950-2031	10-24074-1
		22950-2033	10-24074-2
		22950-2051	10-24074-3
		22950-2053	10-24074-4
		23010-0501	10-13064-2
		23430-1001	10-24127-1
		23430-1041	10-24127-2
		23430-1201	10-24244-
		23430-1441	10-24218-1
		23430-1601	10-24127-
	US	23800-0201	10-24232-1
	US	23800-0251	10-24228-1
	US	2620-1001	10-35038-4
		29300-2101	10-35118-1
		29300-2101	10-35157-3
		29300-2401	10-35187-1
		29440-1001	10-24214-4
		29440-1101	10-24290-1
		29470-2031	10-35127-1
		29470-2131	10-35161-1
		29470-2231	10-35098-2
		29470-2301	10-35167-3
		29470-2331	10-35167-1
		29470-2351	10-35167-2
		29480-2031	10-35240-1
	US	3270-0001	10-24119-2

Description	Version	Jabsco art. no.	JP art. no.
Pump, cont'd		3270-200	10-24119-2
		3270-205	10-24119-3
		3270-2101	10-24119-8
		3270-2301	10-35100-1
		3270-2401	10-24119-7
		3270-241	10-24119-6
		3270-261	10-24119-4
		3270-261	10-24119-4
		3270-261	10-24119-4
		3270-261	10-24119-4
		3270-261	10-24119-4
		3270-261	10-24119-4
		3270-261	10-24119-4
		3270-261	10-24119-4
		3270-271	10-24119-1
	US	36960-0000	10-13083-01
	US	36970-1000	10-13083-02
		52080-2003	10-24070-2
		52080-2011	10-24070-1
		52080-2021	10-24070-3
		52200-2003	10-13021-2
		52200-2011	10-13021-1
		52200-2021	10-13021-3
		52270-2011	10-13026-1
		52270-2011	10-13026-1
		52270-2041	10-13026-2
		52270-2041	10-13026-5
	US	6360-1001	10-24182-3
	US	6370-1001	10-24182-4
	US	6380-1001	10-24182-6
	US	6400-0004	10-13021-9
	US	6400-0004	10-13021-95
	US	6400-0051	10-13021-11
		6400-2001	10-13021-1
		6400-2041	10-13021-3
		6400-237	10-13021-2
		6420-2001	10-24070-1
		6420-204	10-24070-4
		6420-2041	10-24070-3
		6420-237	10-24070-2
	US	777-0001	10-24070-5
	US	777-0003	10-24070-6
	US	8860-0001	10-24180-3
	US	8860-0001	10-24182-3
	US	8870-0001	10-24180-4
	US	8870-0001	10-24182-4
		9700-151	10-24014-
		9700-21	10-24014-1
		9700-21	10-24014-1
		9700-21	10-24014-1

Description	Version	Jabsco art. no.	JP art. no.
Pump, cont'd		9700-21	10-24014-2
	US	9900-0001	10-35098-4
		Intermed.Pupp	10-24182-
		Intermed.Pupp	10-24516-
		Minipuppy	10-24180-
		Waterpuppy	10-24512-
Pump body		9904	01-31902
		10634	01-11206
		10329-200	01-21862-2
		10554-200	01-31927-2
		11264-200	01-31935
		11634-14	01-11367-3
		11634-200	01-11367-4
		11634-26	01-11367-2
Retaining ring		SP1700-62	05-34-105
Screw		SP1002-01	05-04-122
		SP1002-01	05-04-123
		SP1002-01	05-04-553
		SP1002-02	05-04-115
		SP1002-09	05-04-114
		SP1003-09	05-04-117
		SP1003-09	05-04-175
		SP1004-09	05-04-107
		SP1004-11	05-04-144
		SP1005-04	05-04-108
		SP1005-05	05-04-147
		SP1095-09	05-04-105
		SP1095-28	05-04-128
		SP1105-03	05-04-115
		SP1105-04	05-04-148
Shaft		9907	01-42390
		11227	01-42416
Slinger		3181	01-42427-15
		SP1700-62	01-42402
Washer		SP1062-06	05-01-115
		SP1602-02	05-01-115
Wearplate		2574	01-42423
		4156	01-42443
		9996	01-42399
		29306	01-45087

PROCESS EQUIPMENT

Your local contact:

SPX Johnson Pump Marine AB
Nastagatan 19, P.O. Box 1436
SE-701 14 Örebro, Sweden
Phone: +46 (0)19 21 83 00 Fax: +46 (0)19 27 23 72
E-mail: johnson-pump.marine@processequipment.spx.com

For more information about our worldwide locations, approvals, certifications, and local representatives, please visit www.johnson-pump.com and www.spxpe.com.

SPX Corporation reserves the right to incorporate our latest design and material changes without notice or obligation.
Design features, materials of construction and dimensional data, as described in this bulletin, are provided for your information only and should not be relied upon unless confirmed in writing.

Issued: 08/2008 JP-005/03 GB

Copyright © 2001, 2008 SPX Corporation